White paper



TSN empowering AI in automation

New opportunities with PROFINET and TSN

Find out more about:

- The advantages of TSN for AI applications
- The difference between classic fieldbus systems and TSN networks
- The functions of TSN
- The use case “optical anomaly detection” with the help of TSN

PHOENIX CONTACT

Introduction

Time-Sensitive Networks (TSN) have long been discussed as "game changers" in automation. However, the following questions must be answered first: What new applications and solutions are made possible by TSN? How do TSN standards contribute to this? What will the transition to TSN look like? And what will happen to the technology in the future? These questions will be answered in this white paper.

New technologies are always successful when they enable new applications that are currently very difficult or impossible to implement. One of these applications is the increasing use of artificial intelligence (AI) in automation. The computing power and tools available for machine learning, image recognition, data mining, etc., are becoming increasingly cheaper and easier to use. ChatGPT is a good example here. This development is expected to continue at a rapid pace.

What requirements does the use of AI therefore place on automation and networking?

1. Large amounts of data have to be transported from the field to the AI system.
2. The result of the AI operation has a real-time effect on the process to be controlled.
3. High-precision time synchronization is essential for processing and evaluating distributed data from the field.

The optimum solution is to satisfy all these requirements in a single network. In this case, TSN is the solution.

Contents

→ The status: The old and new world 3

→ The technology: How does TSN work? 6

→ The application: Where is TSN needed? 11

→ Outlook 13

→ Contact 14

1 The status: The old and new world



Fieldbus and IT in separate networks

Currently, the requirements described above are often implemented in separate networks. The following figure illustrates the current situation:

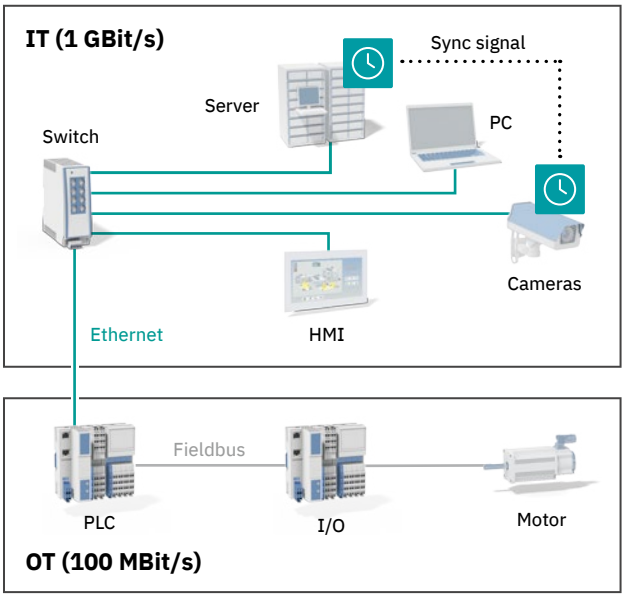

Separate networks for field communication and IT

One example is an application in which several cameras record an image at a synchronized time. This is then evaluated on a server with AI-based anomaly detection. The result of this evaluation is then fed back into the automation process.

The camera network requires at least a Gigabit infrastructure because image data can very quickly reach several 100 Mbps. However, the common fieldbus systems currently in use are often based on just 100 Mbps and therefore cannot be used to transport large amounts of data. High-precision time synchronization is also not always available in IT networks and systems such as PROFINET RT. For this reason, separate cables are sometimes laid to synchronize the cameras.

The advantage of separation is that, in principle, the IT communication cannot have a negative impact on the real-time-capable function of the fieldbus. There are disadvantages, though – including greater effort and costs for installation, maintenance and commissioning of the fieldbus, IT and synchronization system, a high complexity with the necessary specialist knowledge, and low flexibility for future extensions and changes such as the subsequent installation of new cameras.

TSN – one network for everything

The example given clearly shows that there is considerable potential for improvement in combining all the necessary functions in a single network. This is often referred to as a “convergent network”. The adjacent figure illustrates this.

The most important thing here is that the disciplines of the IT and OT worlds do not affect each other in a shared network. To ensure this, a number of optimizations must be made in the Ethernet structure itself, which together are referred to as Time-Sensitive Networks. This is explained in more detail in the following.

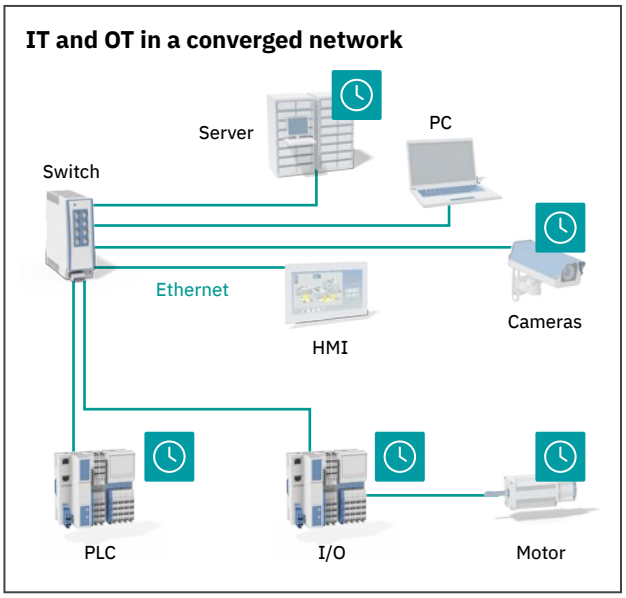

A convergent network for field communication and IT

2 The technology: How does TSN work?



It is important to understand that TSN is not a single mechanism or a single standard. Rather, TSN can be compared to a tool box filled with several tools, each of which is designed for a specific purpose. The full benefits of a convergent network only unfold when all the tools work together correctly. These tools are combined in PROFINET via TSN such that the look and feel does not change. This is illustrated again in the following figure:

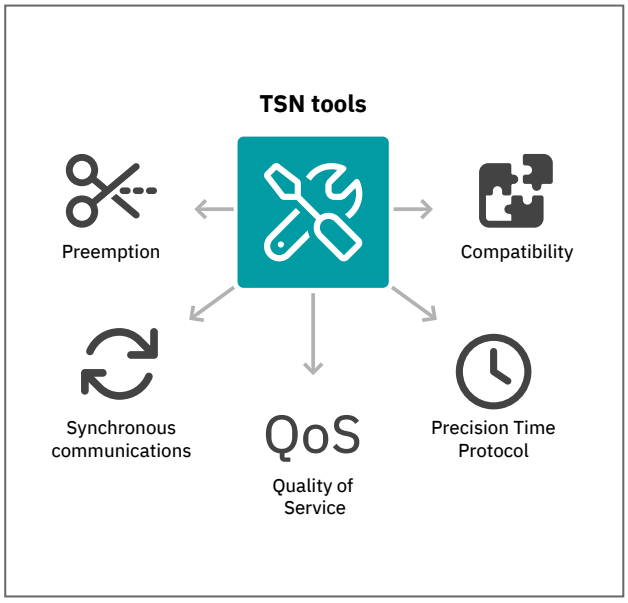

TSN tools for a convergent network

Quality of Service – right-of-way rules

Quality of Service (QoS) is not a new concept. It has been in use in the Ethernet infrastructure for many years. However, in a convergent network, QoS is essential to ensure that the individual types of communication comply with predefined rules and do not affect each other.

Each telegram received – for example, at a switch – is sorted into separate memory areas (so-called queues) based on a priority field (VLAN priority). Packets with different priorities can be mixed in the input data. Currently, up to eight priorities are common. The stored telegrams are then sent again on the send side in accordance with their priority, from ‘high’ to ‘low’. It must be ensured that queues with a high priority – for example, for real-time telegrams – are not overloaded, because this can lead to telegram losses and disconnections in the field. With PROFINET RT, this is already guaranteed through network planning. This model ensures that telegrams with a high priority are sent even if the memories of lower priorities are overloaded, which is not so critical for TCP/IP traffic.

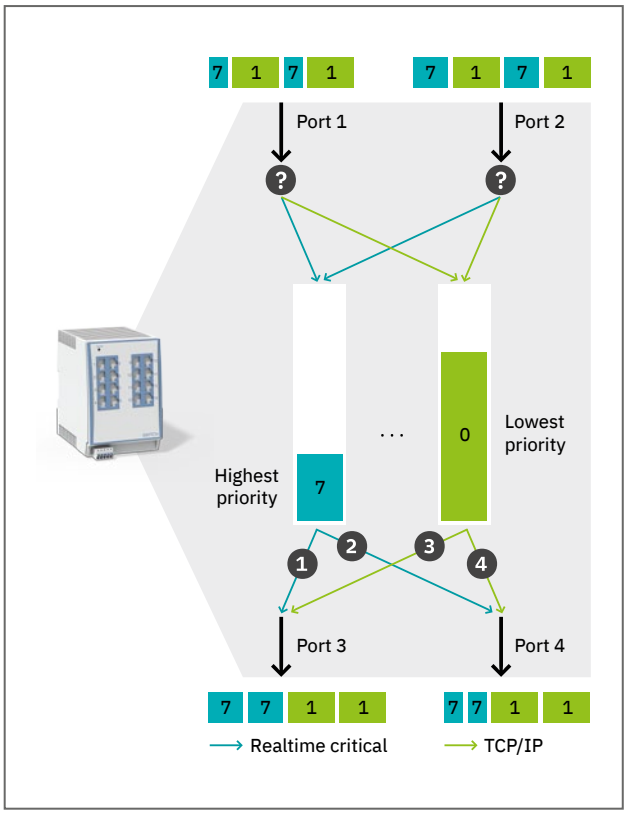

Functional principle of Quality of Service

Preemption – interruption of long telegrams

Another problem that can occur in a convergent network is the delay of real-time-critical telegrams due to long TCP/IP telegrams on the send port. At a bandwidth of 1 Gbps, a maximum Ethernet telegram of 1,500 bytes occupies the medium for 12.5 milliseconds. For oversized telegrams (jumbo frames, 9,000 bytes), this period can even be as much as 75 milliseconds. Without further measures, these times in line topologies add up to non-deterministic transmission latencies (so-called jitter). This is where TSN's so-called pre-emption mechanism comes in.

When a telegram with a high priority is sent, a telegram with a lower priority is interrupted immediately. The remainder still to be transmitted is saved and continued after the high-priority transmission. This mechanism is implemented in the hardware so that it works at "wire speed". Preemption ensures that the transmission variance at 1 Gbps is reduced to approximately 1 millisecond, regardless of the telegram size. Preemption is therefore a very effective tool in the TSN tool box.

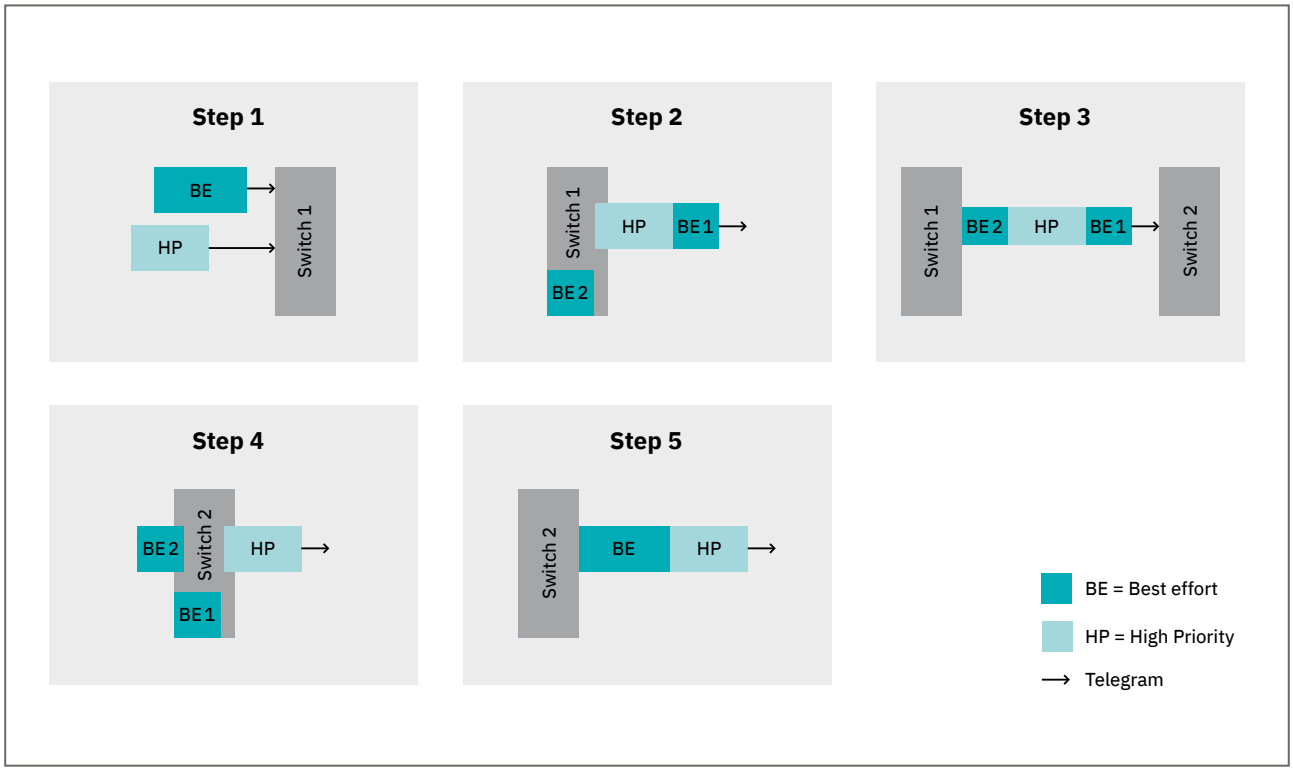

Functional principle of preemption

PTP – precision time synchronization

High-precision time synchronization is required for many applications that combine AI. The common synchronization protocol NTP (Network Time Protocol) is not sufficient for this. In addition, NTP is not supported by every device.

Therefore, the so-called Precise Time Protocol (PTP, 802.1AS) is used for time synchronization with TSN. Synchronization accuracies in the millisecond range can be achieved using this protocol. The function is as follows: The basic principle of time synchronization is the regular transmission of a reference time to the network.

The clocks in all participating devices synchronize to this reference time. The runtime of Ethernet telegrams on the line is 5 nanoseconds per meter. At a line length of 100 meters, this amounts to 500 nanoseconds. For an accuracy of 1 millisecond, the runtime on the lines must therefore already be known and compensated for. Added to this is the forwarding time of the time telegrams in the switches. These are themselves in the millisecond range and must also be compensated for. The PTP protocol therefore specifies mechanisms for runtime measurement and compensation of time telegrams, which result in the required high synchronization accuracy.

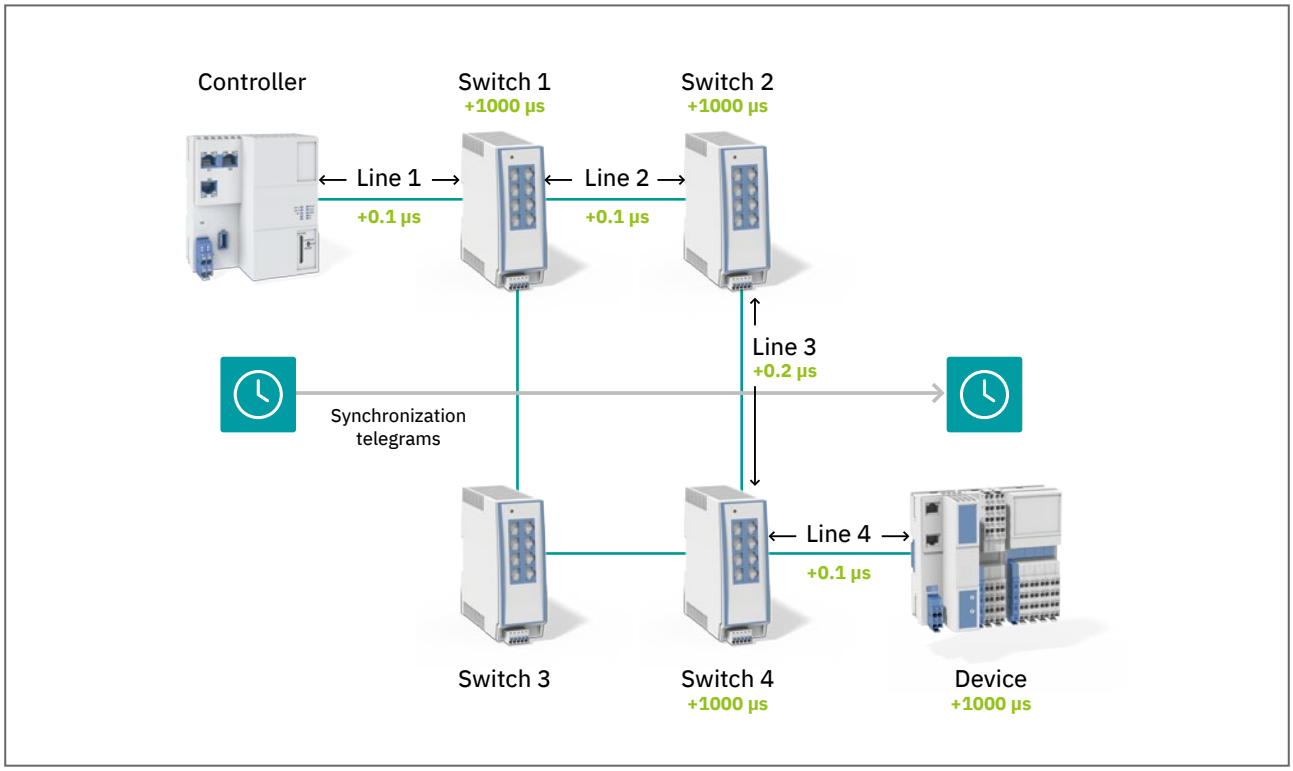

Basics of the Precise Time Protocol

Synchronous communication

The high-precision time synchronization via PTP also enables the synchronization of communication and applications in the devices involved, as shown in the figure.

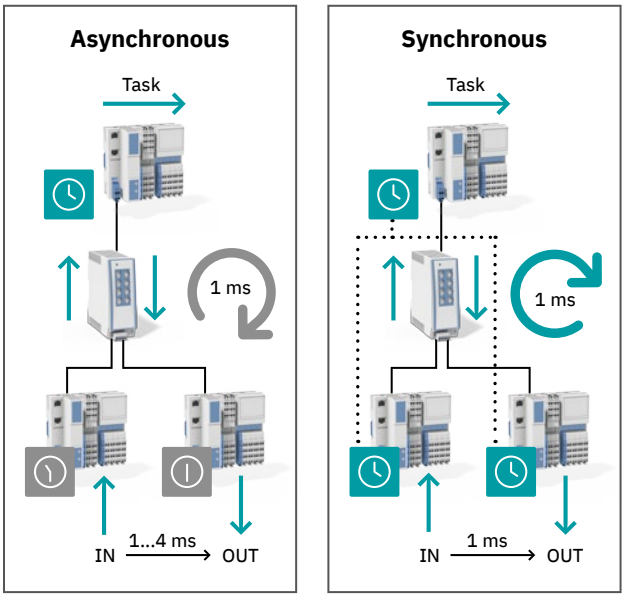

Asynchronous vs. synchronous communication

With PROFINET RT, communication and applications run asynchronously on the devices and controllers. This means that the so-called “terminal to terminal” response time can vary over a wide range. Assuming a cycle time of 1 millisecond, it is only possible for one cycle to be missed on the way from the input to the output without synchronization. This means that the response time can change sporadically in the range of 1 to 4 milliseconds. Synchronous communication ensures that data on its way from input to output is always received and processed on time. This significantly increases the determinism of PROFINET.

Compatibility – investment security

Using the tools described above requires new hardware in all participating devices. TSN will therefore initially only be introduced where there is a significant advantage. For this reason, measures are also being taken to enable a smooth transition from PROFINET RT to PROFINET via TSN. This will secure investments in devices and expertise.
The TSN tools described can only be used between suitable devices. These must then

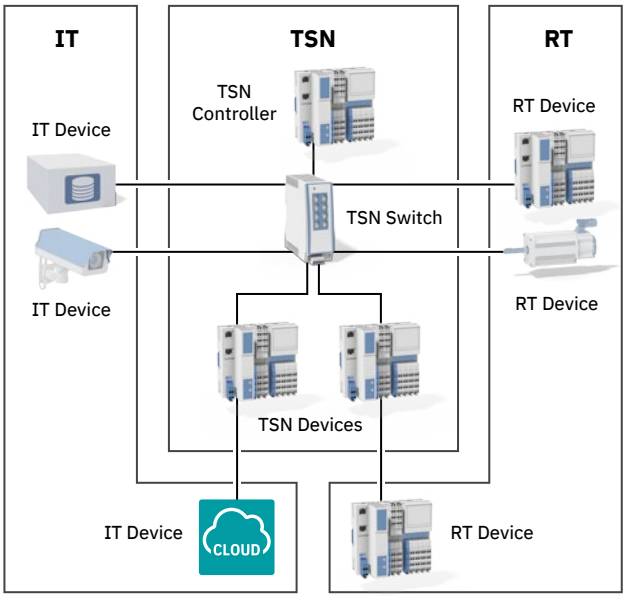

Compatibility of the TSN system with existing RT and IT devices

be installed in a consistent area. Existing RT and IT devices can be connected to each port in this area. Although these devices do not benefit directly from TSN, they can continue to be used with the same quality as before.

3 The application: Where is TSN needed?



Application example “optical anomaly detection”

The advantages of TSN can be explained in concrete terms using the application example of “optical anomaly detection”.
An optical quality control system is to be integrated into a continuous manufacturing process for products. Due to the speed of production, one camera alone cannot capture a sharp product image. For this reason, several cameras are installed above the passing products, with the image capture synchronized to one production product. An AI application – for example, on an edge PC – reads the individual images, compiles them into a complete product image and compares this image with a learned ‘normal’. If the product image deviates from this standard, the affected component is sorted out in a downstream step.

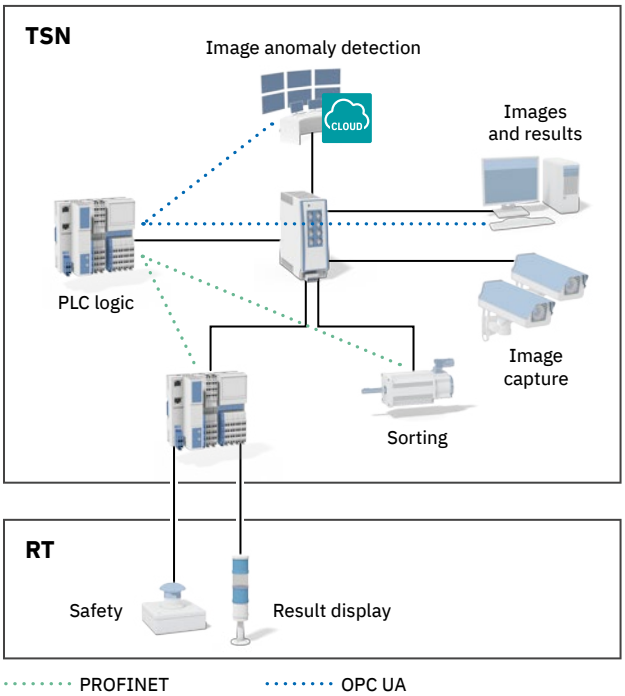

Application example for PROFINET with TSN

The following TSN tools are helpful here:

- PROFINET with synchronous communication for production control
- PTP for synchronizing the cameras
- QoS for parallel transmission of real-time data and image data
- Preemption to prevent camera data from affecting the latency of real-time telegrams

All of this can be realized in a single network. Future extensions are also possible, as any ports can be used for new devices.

Further application examples for TSN

Other potential applications that will benefit from TSN tools include:

- Robot vision
- Transmission of vibration data for predictive maintenance
- 3D images via synchronized cameras
- Frequency synchronization in the feed-in and load management of alternative power generators
- Highly accurate time stamps in alarm messages to track a sequence over time
- The update of large amounts of data, e.g., firmware updates during operation

These applications and many more will benefit from the use of a shared network including time synchronization. This results in considerable advantages compared to separate installations.

Outlook

The tools described can be easily used for PROFINET communication between controllers and field devices without changing the application view of PROFINET. In many applications, however, communication takes place not only between controllers and field devices (controller to IO), but also between controllers themselves (controller to controller). OPC UA with pub/sub communication is more suitable for this use case. The OPC Foundation is therefore also working on a usage concept for TSN as part of its work on OPC UA Field Exchange. The aim is to share PROFINET, OPC UA, and IT data in a convergent network.

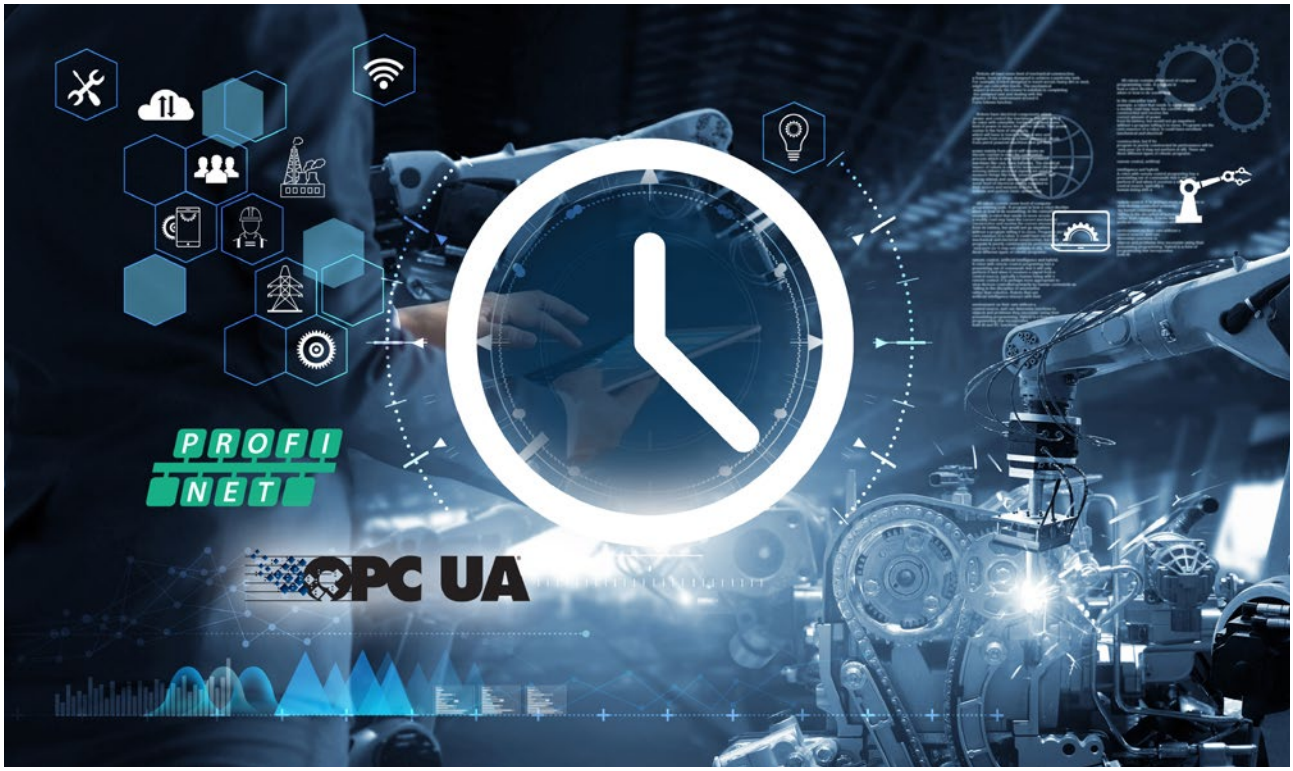

Shared use of PROFINET, OPC UA, and IT data in a convergent network

Contact

Book your consultation now

Are you looking for a strong partner to assist with the setup and operation of future-oriented communication networks?

For a secure and stable network, you need professional planning and high-quality components that are perfectly suited to each other. We will be happy to advise you on all aspects – from network planning to selecting the appropriate components up to implementation – and will support you with future-oriented products.

Discover your hidden potential by talking to our experts. We look forward to hearing from you.



Gunnar Lessmann

Master Specialist for PROFINET and TSN at Phoenix Contact

glessmann@phoenixcontact.com

Stay on the ball

Learn more about new technologies such as:

- → Time-Sensitive Networking (TSN)
- → 5G
- → Single Pair Ethernet (SPE)
- → And much more

phoenixcontact.com/communication-technologies

3011542668