Modular remote relay system with network connection

The decentralized solution for simple applications with a small to medium number of channels

PLC-INTERFACE Ethernet Gateway: The modular remote relay system for simple applications with up to 56 I/O channels. Integrate your relays into the network very flexibly with a multi-protocol connection. Benefit from high flexibility and intuitive integration with compatibility with common control software.

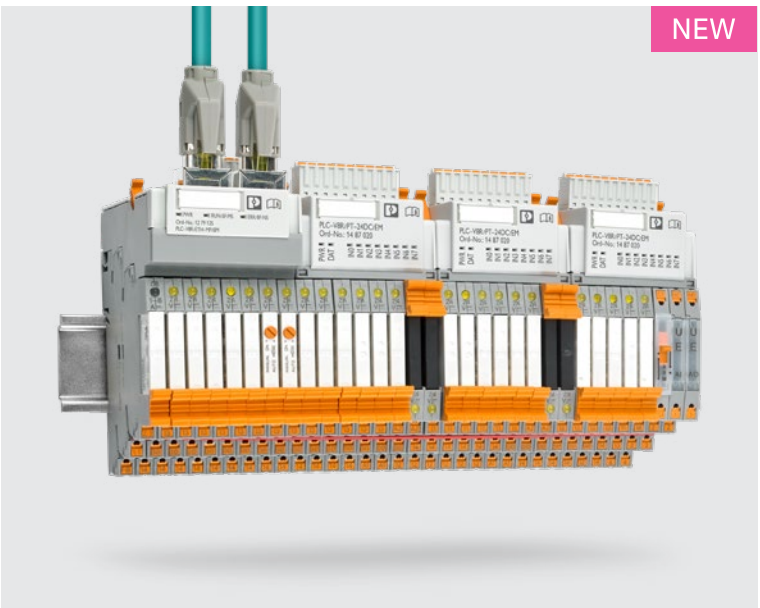

Main features

- Multi-protocol connection: PROFINET, EtherNet/IP™, Modbus/TCP
- Simple integration into the control system software via device description files
- Compatible with PLC-INTERFACE relay and analog modules
- Temperature range: -40°C ... +60°C
- Maximum number of channels: up to 56 channels

Your advantages

- Flexible channel configuration (DI, DO, AI, AO, Ex, Temp.) and compact design for simple applications with a small to medium number of channels in the decentralized control box
- Multi-protocol connection due to the innovative network module with high-performance chipset (PROFINET Class C and S2 redundancy)
- Intuitive and fast integration into the control level due to compatibility with established control software

Find out more!

Modular remote relay system with network connection

Classic solution with bus coupler and I/O cards compared to the remote relay system

In industrial automation, the challenge is to integrate various signals in small, decentralized control cabinets and connect them to higher-level controllers via Industrial Ethernet. Even for applications with a small number of I/Os or low level of complexity, many companies currently use powerful remote I/O systems.

We offer a cost-effective solution that is specifically tailored to these requirements. Our adaptable remote relay system enables cost-effective and space-saving implementation, whether it is a new design or an extension of your existing PLC-INTERFACE relay system. Rely on our expertise to make your signal processing more efficient and future-proof.

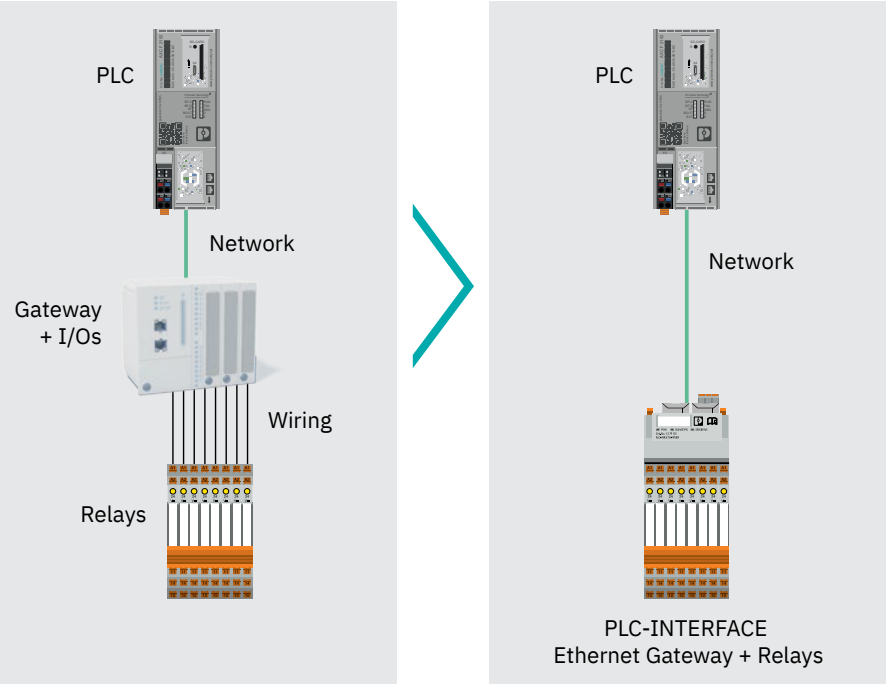

System comparison: Decentralized connection of coupling relays

Product selection			
Description	**Base module with multi-protocol connection (PROFINET, EtherNet/IP™, and Modbus/TCP) with 8 I/Os**	**Extension module with 16 I/Os (a max. of 3 extension modules can be connected to 1 base module)**	**Starter kit, consisting of: base module, 4 relay output terminals, and 4 relay input terminals**
Type	PLC-V8R/ETH-MP/BM	PLC-V8R/PT-24DC/EM	PLC-V8R-STARTERKIT/4XDO/4XDI
Item no.	1279135	1487020	1861270