6

Automation

2019 / 2020

PHOENIX CONTACT
INSPIRING INNOVATIONS

Terminal blocks

- Terminal blocks

Sensor/actuator cabling and connectors

- Sensor/actuator cabling
- Cables and lines
- Connectors

Marking systems, tools, and mounting material

- Marking and labeling
- Tools
- Installation and mounting material

Surge protection, power supplies, and device circuit breakers

- Surge protection and interference suppression filters
- Power supplies and UPS
- Protective devices

Interface technology and switching devices

- Electronic switching devices and motor control
- Measurement and control technology
- Monitoring
- Relay modules
- System cabling for controllers

Automation

- PLCnext Technology
- Industrial cloud computing
- Software
- PLCs and I/O systems
- Functional safety
- Industrial communication technology
- HMIs and industrial PCs
- Lighting and signaling

Charging technology for electromobility

- Charging technology for electromobility

PCB terminal blocks and PCB connectors

Use our E-paper for quick product selection.

Web code: #1517

Find out more with the web code

For detailed information, use the web codes provided in this brochure. Simply enter # and the four-digit number in the search field on our website.

Web code: #1234 (example)

Or use the direct link:
phoenixcontact.net/webcode/#1234

You will find the latest information including all the new products directly in the product area of our website:

phoenixcontact.net/products

You can also use the Phoenix Contact catalog app interactively on your tablet.

Download on the App Store

GET IT ON Google play

Table of contents

PLCnext Technology 4

Industrial cloud computing 16

Software 24

Conventional PLCs and small-scale controllers 40

I/O systems 62

Functional safety 204

Industrial communication technology

- Industrial Ethernet 284
- Industrial Wireless 368
- Remote communication 398
- Fieldbus communication 418

HMIs and industrial PCs 464

Lighting and signaling 496

Technical information / index 524

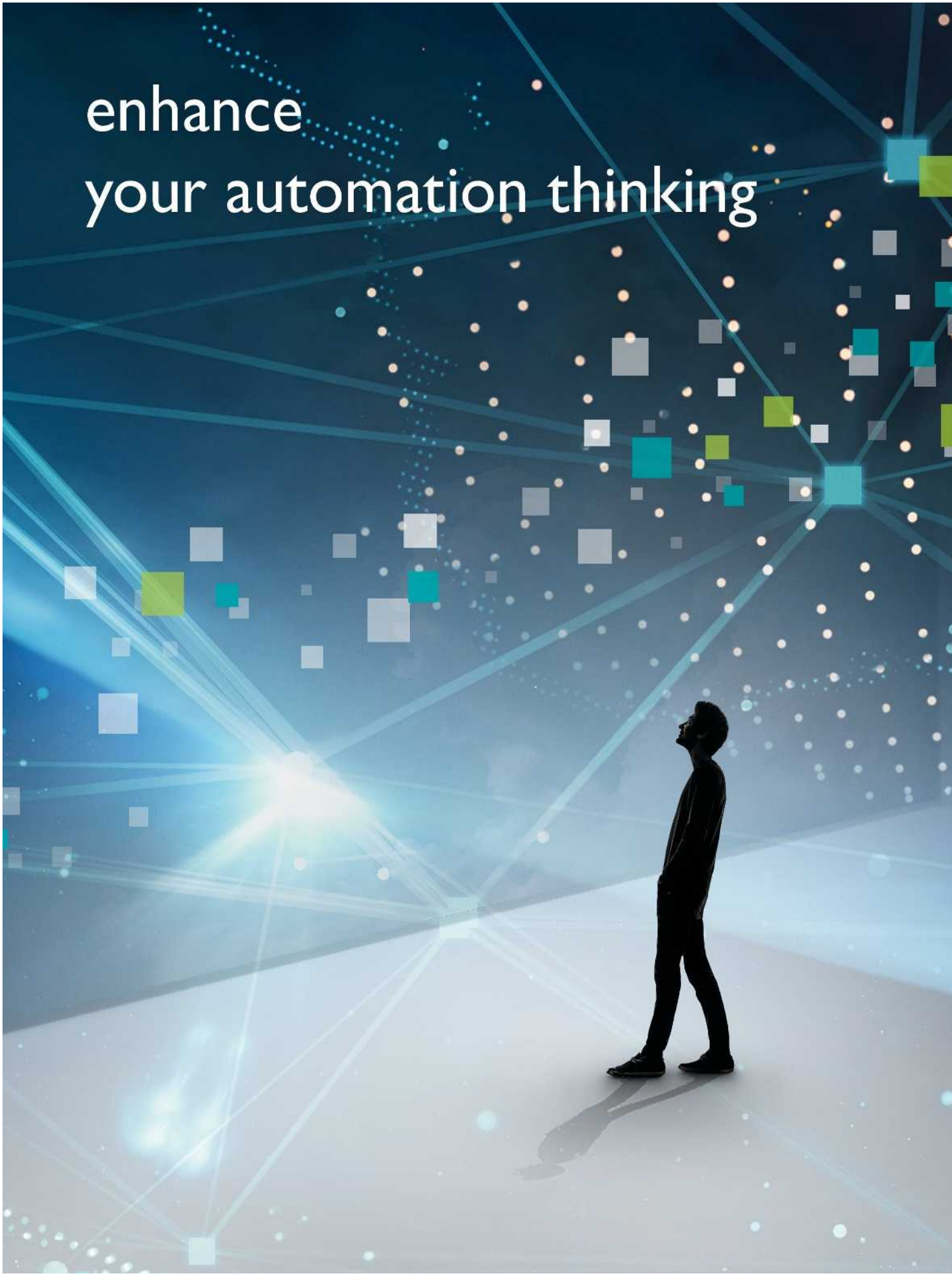
enhance
your automation thinking

PLCnext Technology

Open ecosystem for limitless automation

Automation is currently experiencing an unprecedented global paradigm shift. Classic system structures are developing into globally interlinked production systems. The pace of innovation is increasing rapidly, technologies are converging, and products and infrastructures are becoming more intelligent.

Young engineers and software developers are shaping new working methodologies and cloud computing is enabling the creation of future-oriented industrial business models. Future-oriented automation systems have to be flexible, adaptable, and networked.

PLCnext Technology is the unique ecosystem for limitless automation:

PLCnext Control
– Open control platform

PLCnext Engineer
– Engineering software in accordance with IEC 61131-3

PLCnext Store
– Software store for automation

PLCnext Community
– The expertise of a networked team. For global exchange with users.

PLCnext Technology	**6**
PLCnext Store and PLCnext Community	**9**
PLCnext Control	**10**
PLCnext Engineer	**14**

PLCnext Technology

Designed by PHOENIX CONTACT

In a rapidly changing world, in which more things are now networked together than there are people, industrial automation is also undergoing a fundamental shift: classic system structures are developing into cyber physical systems.

The digitalization, networking, and globalization of business and technical systems are generating new market requirements. Manufacturers of future-oriented automation systems must be ready to provide their customers with the ability to meet the standards of modern IoT applications.

For this reason, Phoenix Contact has created PLCnext Technology – a new, unique ecosystem. This ecosystem enables developers to unleash their creativity when designing an automation solution.

PLCnext Technology from Phoenix Contact is a unique, open ecosystem for modern automation that is capable of meeting all the challenges of the IoT world.

The combination of open control platform, modular engineering software, and systemic cloud integration enables easy adaptation to changing demands and the efficient utilization of existing and future software services. With the PLCnext Store, Phoenix Contact provides the PLCnext Community with an open exchange platform for their software functions.

PLCnext Technology
Enhance your automation thinking

www.phoe.co/plcnext

Connected coworking

With PLCnext Technology, multiple developers from different generations can work on one control program independently of each other using different programming languages.

This enables you to develop complex applications quickly by combining the advantages of the classic PLC world with the openness and flexibility of PLCnext Technology.

Real-time execution across different programming languages

Combine program sequences in different languages into tasks as desired. The task handling of PLCnext Technology (patent pending) enables program routines of different origin to be run as classic IEC 61131 PLC code – your high-level language programs automatically become deterministic.

The platform ensures consistent data exchange and synchronous execution of the program code.

Flexible integration of open-source software and apps

PLCnext Technology enables you to combine independent program parts created in various environments and complete applications in any way you like.

The use of open-source software and apps, e.g., from our PLCnext Store, increases the efficiency of your development processes. There are no limits when it comes to future expansions.

Open interfaces and cloud integration

PLCnext Technology enables you to integrate current and future interfaces and protocols for open communication in highly networked automation systems.

Implement new IoT-based business models through direct connection to cloud-based services and databases.

Using your favorite programming tool

The openness of PLCnext Technology enables you to use your favorite programming language, be it IEC 61131-3 or high-level language.

Develop your individual solution conveniently in a familiar development environment such as PLCnext Engineer, Matlab Simulink, Eclipse or Visual Studio.

PLCnext Control

Using controllers based on PLCnext Technology, multiple developers from different generations can work on one control program independently of each other using different programming languages.

This enables you to develop complex applications quickly by combining the advantages of the classic PLC world with the openness and flexibility of PLCnext Technology.

Further information:
See page 10

PLCnext Engineer

PLCnext Engineer is the modular software platform in accordance with IEC 61131-3 for the new controllers in the PLCnext Control family from Phoenix Contact. The software combines all of the basic functions needed for configuration, programming, visualization, and diagnostics. Additional functions and interfaces can be easily integrated into the software using add-in functions. The innovative software features an attractive design, object-oriented programming, and optimized user interfaces.

Further information:
See page 15

PLCnext Store

The PLCnext Store provides software applications (apps) that enable you to easily and directly extend the functions of a controller from the PLCnext Control family. The open nature of the store also allows third-party providers to sell the apps that they have developed.

In the PLCnext Store, you can get a wide range of apps for every possible application – from software libraries for accelerated programming through to completely programmed apps that can be used without any programming knowledge.

Further information:
www.plcnextstore.com

PLCnext Community

The PLCnext Community provides information on all aspects of PLCnext Technology. For example, discover application examples, instructions for use, further instructions, tutorials, training videos, and FAQs, as well as software and firmware downloads. Use our GitHub forum or the technical help available on YouTube. Become a part of the user community. Discuss your personal experiences with PLCnext Technology with other users. We look forward to your ideas and feedback.

Further information:
www.phoe.co/plcnext

PROFICLOUD

With digitalization on the increase, there is a need to integrate data analysis into company processes, for example. To implement the guiding principles of the IoT, machines and facilities around the world must be comprehensively networked, and field devices equipped with additional cloud services.

By upgrading automation systems to include cloud solutions, new demands in automation can be met and new digital business models implemented. For this reason, Proficloud is a key factor for future success and a possible extension of the PLCnext Technology ecosystem.

Proficloud from Phoenix Contact provides a comprehensive, professional cloud solution for automation – from cloud devices and the right platform through to cloud services. Thanks to PLCnext Technology, you can achieve a seamless transition from the control level to Proficloud.

As to be expected, our controllers from the PLCnext Control family perform process-oriented data processing quickly and in real time. The selected and processed data is then securely transferred to Proficloud by the Edge controller.

Further information:
See page 17

PLCnext Store

Creative ideas and innovative solutions for your application

Accelerate your application development process and use solution apps. In the PLCnext Store, you can download finished solutions to your PLCnext Control device and create your application quickly – without any deep understanding of programming. This means that, thanks to the PLCnext Store, a PLCnext Control device can, for example, be transformed into a solar park PLC easily and without programming. Phoenix Contact already provides numerous software libraries for PLCnext Engineer which are now available to you as apps in the PLCnext Store for easy downloading.

These libraries include, for example, data logger functions and remote control protocols. You therefore receive optimum support in the efficient programming of your PLCnext Control device.

Become a contributor and benefit from the ecosystem

Do you lack access to hardware distribution or the platform for your software solution? Become a contributor to the PLCnext Store and benefit from the unique ecosystem. Make your software solutions available to a huge range of potential customers. This will not only enable you to increase your income, but also boost your profile and visibility in a field of industry that is relevant to you.

Become a part of the PLCnext community

Along with a future-oriented system of hardware, software, and cloud solutions, users of the ecosystem also benefit from a growing community involved in all aspects of PLCnext Technology. Dialog with users is becoming increasingly important, and having access to specialists and a wide range of apps, code, and sample programs is a huge advantage for programmers.

The PLCnext Community provides information on all aspects of PLCnext Technology. For example, discover application examples, instructions for use, further instructions, tutorials, training videos, and FAQs, as well as software and firmware downloads. Use our GitHub forum or the technical help available on YouTube.

Become a part of the user community. Discuss your personal experiences with PLCnext Technology with other users. We look forward to your ideas and feedback.

Join the community – become a part of PLCnext Technology

High-performance PLC

PLCnext Control AXC F 2152 combines the reliability and security of the classic PLC world with the openness and flexibility of smart devices. The controller makes it possible to implement automation projects without the limits of proprietary systems.

Your advantages:

- PLC-typical determinism and data consistency, also for high-level languages and model-based code
- Unlimited adaptability, thanks to the quick and easy integration of open-source software, apps, and future technologies
- Intelligent networking, thanks to cloud connection and the integration of current and future communication standards
- Quick application development: multiple developers can work independently in different programming languages

Additional features:

- Inline modules can be aligned using a coupling disc
- Trusted Platform Module for security
- PROFINET
- OPC UA
- Direct connection to Proficloud

Ex:

Technical data

Interfaces		
Axioline F local bus		Bus base module
Ethernet		2 x RJ45 socket
AXIOBUS master		
Number of supported devices		max. 63 (per station)
IEC 61131 runtime system		
Programming tool		PLCnext Engineer Eclipse
Processor		Arm® Cortex®-A9 2x 800 MHz
Program memory		8 Mbyte
Mass storage		16 Mbyte
Retentive mass storage		48 kByte (NVRAM)
Number of data blocks		depends on mass storage
Number of control tasks		32 (16 per processor core)
Real-time clock		Yes
Power supply		
Supply voltage		24 V DC
Supply voltage range		19.2 V DC ... 30 V DC
Typical current consumption		200 mA (without I/Os and U_L = 24 V)
General data		
Dimensions	W / H / D	45 mm / 126.93 mm / 75 mm
Degree of protection		IP20
Ambient temperature (operation)		-25°C ... 60°C up to 2000 m above mean sea level (observe derating)
EMC note		Class A product, see page 527

Ordering data

Description	Type	Order No.	Pcs./Pkt.
PLCnext Control, complete with accessories (connector and bus base module)	**AXC F 2152**	2404267	1

Accessories

Program and configuration memory, Flash card for storing application programs and other files in the PLC file system	**SD FLASH 8GB PLCNEXT MEMORY**	1061701	1
	SD FLASH 2GB PLCNEXT MEMORY	1043501	1
Programming cable	**CAB-USB C/ USB C/1,8M**	1021809	1
	CAB-USB A/ USB C/1,8M	2404677	1
Function modules	**See page 55**		
Engineering software	**PLCnext Engineer (see page 14)**		

High-performance safety PLC

new

The RFC 4072S is the first high-performance controller based on PLCnext Technology. Use in applications with the highest safety requirements in accordance with SIL 3 or PL e is also possible. With PLCnext Engineer, standard and safety programming can be performed in a single engineering tool.

Your advantages:
- PLCnext Technology: preferred programming languages and programming environments, open-source software, apps, Proficloud, and also coming soon PLCnext Store with real-time execution
- Safety: maximum safety of machinery, thanks to diversified processors and support for up to 300 PROFIsafe devices
- Performance: the use of an Intel® Core™ i5 Dual Core processor and two powerful processors based on Arm architecture enables one of the best performance capabilities on the market

Additional features:
- PROFINET controller and device
- Support for PROFIsafe profile V2.6.1
- M2M system networking with OPC UA
- Communication in up to three separate subnets
- Convenient operation via the touch display

The RFC 4072S is able to satisfy the following requirements in safety-related applications:
- SIL 3 in accordance with IEC 61508
- PL e in accordance with EN ISO 13849-1

Technical data

Interfaces		
Ethernet		4 x RJ45 socket
USB 2.0		1 x USB type A, male connector
PROFINET master		
Number of supported devices		max. 256
IEC 61131 runtime system		
Programming tool		PLCnext Engineer Eclipse
Processor		Intel® Core™ i5-6300U 2x 2.4 GHz (Standard) Arm® Cortex®-A9 800 MHz (Safety) Arm® Cortex®-A8 600 MHz (Safety)
Program memory		16 Mbyte
Mass storage		32 Mbyte
Retentive mass storage		2 Mbyte
Real-time clock		Integrated (battery backup)
Power supply		
Power supply connection		Screw terminal blocks, plug-in
Supply voltage		24 V DC
Supply voltage range		19.2 V DC ... 30 V DC (including ripple)
Typical current consumption		1 A
General data		
Dimensions	W / H / D	122 mm / 182 mm / 173 mm
Degree of protection		IP20
Ambient temperature (operation)		0°C ... 55°C (from 40°C only with fan module)

Ordering data

Description	Type	Order No.	Pcs./Pkt.
Safety controller			
	RFC 4072S	**1051328**	1

Accessories

Program and configuration memory, Flash card for storing application programs and other files in the PLC file system	**SD FLASH 2GB PLCNEXT MEMORY**	**1043501**	1
Fan module for Remote Field Controller	**RFC FAN MODULE**	**2404085**	1
Engineering software	**PLCnext Engineer (see page 14)**		

Adapter terminal for Inline I/Os

new

The adapter terminal is used for all controllers from the PLCnext Control family in the Axiocontrol series. It provides an interface for Inline – the I/O system with fine granularity. Simply connect the terminal to a compatible controller on the right.

Your advantages:

- Inline I/O adapter terminal specifically developed for all PLCnext Control devices in the Axiocontrol series
- A variety of functional I/Os create possibilities for flexible automation solutions
- Convert existing machines and systems to the new, open PLCnext Technology control platform

Additional features:

- Up to 63 Inline local bus devices can be aligned
- Automatic detection of the transmission speed
- Diagnostic and status indicators

Technical data

Local bus interface		
Designation		INTERBUS local bus (master)
Connection method		Inline data jumper
Amount of process data		max. 4096 Bit (INTERBUS)
Number of local bus devices that can be connected		max. 63 (observe current consumption)
Number of devices with parameter channel		max. 24
Power supply for module electronics		
Main circuit supply U_M		24 V DC -15% / +20% (in acc. with EN 61131-2)
Supply voltage range U_M		19.2 V DC ... 30 V DC (including all tolerances, including ripple)
Power supply at U_M		max. 8 A DC (sum of $U_M + U_S$)
Communications power U_L		7.5 V DC ±5%
Power supply at U_L		max. 0.8 A DC (observe derating)
I/O supply voltage U_{ANA}		24 V DC -15% / +20%
Power supply at U_{ANA}		0.5 A DC (observe derating)
General data		
Connection data rigid / flexible / AWG		0.08 ... 1.5 mm² / 0.08 ... 1.5 mm² / 28 - 16
Connection method		Spring-cage connection
Weight		66 g
Dimensions	W / H / D	12.2 mm / 119.8 mm / 71.5 mm
Ambient temperature (operation)		-25°C ... 55°C
EMC note		Class A product, see page 527

Ordering data

Description	Type	Order No.	Pcs./Pkt.
Right-alignable Inline adapter terminal (INTERBUS master) for one PLCnext Control device for setting up a PLCnext Technology Inline station	**AXC F IL ADAPT**	1020304	1

Additional Ethernet interface

new

The module provides an extra Ethernet interface with an additional MAC address for controllers from the PLCnext Control family in the Axiocontrol series. Simply connect the module to a compatible controller on the left. Configuration is performed via PLCnext Engineer.

Your advantages:
- Individual expansion option for all controllers from the PLCnext Control family in the Axiocontrol series
- Additional Gigabit-enabled Ethernet interface
- Additional independent MAC address
- PROFINET support

Additional features:
- Connection via RJ45 socket
- One additional MAC address
- Extended temperature range (-25°C ... +60°C)
- Suitable for use in harsh environments in accordance with Axioline standard

Technical data

Ethernet interface		
Connection method		RJ45 socket
Transmission speed		10/100/1000 Mbps (full duplex)
General data		
Connection method		Push-in connection
Connection data rigid / flexible / AWG		0.2 ... 1.5 mm² / 0.2 ... 1.5 mm² / 24 - 16
Dimensions	W / H / D	35 mm / 126.1 mm / 54 mm
Ambient temperature (operation)		-25°C ... 60°C (up to 2000 m above sea level)

Ordering data

Description	Type	Order No.	Pcs./Pkt.
Left-alignable Ethernet interface, for connection to a compatible modular controller from the Axiocontrol range	AXC F XT ETH 1TX	2403115	1

Starter kit – Easy introduction to automation with PLCnext Technology

Do you want to try out the operation, handling, and performance of PLCnext Technology in a small-scale application first? Phoenix Contact can provide you with a starter kit based on PLCnext Control AXC F 2152 for your test applications.

Your advantages:
- PLC-typical real-time performance and data consistency, also for high-level languages and model-based code
- Unlimited adaptability, thanks to the quick and easy integration of open-source software, apps, and future technologies
- Intelligent networking, thanks to cloud connection and the integration of current and future communication standards
- Quick application development: multiple developers can work independently in different programming languages
- Convenient engineering with your favorite programming tools

Technical data

See AXC F 2152 on page 10

Ordering data

Description	Type	Order No.	Pcs./Pkt.
PLCnext Technology starter kit, including AXC F 2152 controller, voltage switch, digital and analog input and output modules, potentiometer, switch module, plus power supply unit, patch cable, country-specific adapter plug, and documentation	AXC F 2152 STARTERKIT	1046568	1

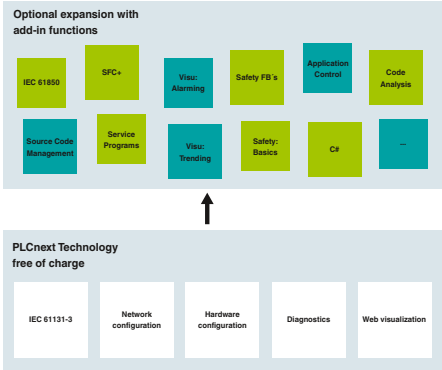

Optional expansion, thanks to add-in functions

PLCnext Engineer is the flexible software platform for the new PLCnext Control family. It combines all the basic functions needed for configuration, standard and safe programming, visualization, and diagnostics.

Standard and safe programming in accordance with IEC 61131-3

The software enables intuitive programming in accordance with IEC 61131-3. The software supports the following languages:
– Structured text (ST)
– Ladder Diagram (LD)
– Function Block Diagram (FBD)
– Sequential Function Chart (SFC)

In the case of graphical programming languages, users can choose between network-oriented and free graphical programming, and can combine the various languages within Program Organization Units.

Safe programming has been developed in accordance with IEC 61508 and certified by TÜV Rheinland. Network-oriented editors allow users to use function block diagram or ladder diagram as a limited variability language (LVL) and to combine the two. A verification function can be used to protect individual safety functions. The safe semantic code analysis that constantly runs in the background while code is being entered assists the user in positioning safety-related or standard signals and blocks.

Web-based visualization

PLCnext Engineer has been optimized for the creation of modern visualization solutions. Already familiar operating concepts from other editors make it easier to get started. With respect to the technology, the visualization integrated into PLCnext Engineer is based on open standards such as HTML5 and JavaScript. No web-based skills are required, the software offers numerous symbols and templates and can be extended as necessary to suit your needs.

User-friendly configuration

Configuring an automation solution is fast and intuitive. It includes basic controller settings as well as the ability to create networks such as PROFINET or to configure local I/O modules. For PROFINET networks, a convenient topology editor is also included.

Diagnostics of the overall system

From the central controller cockpit, users can determine the status of their overall application. They can determine whether enough reserves are present or whether limits have already been exceeded. PROFINET topology plans are checked online and errors or differences in the diagnostic archive of the controller cockpit are displayed.

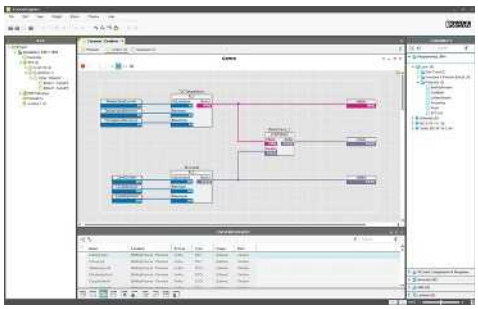

Programming in accordance with IEC 61131-3

Visualization

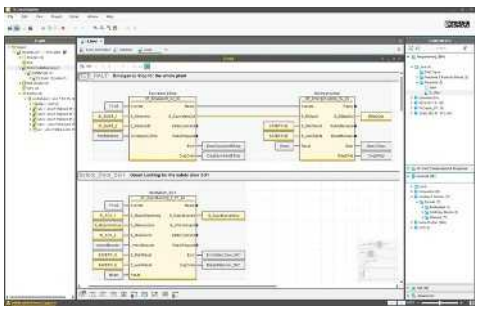

Functional safety

Engineering software in accordance with IEC 61131-3

PLCnext Engineer is a flexible engineering platform for programming in accordance with IEC 61131-3. In addition to standard programming, you can now perform all other engineering tasks using this platform, such as configuration, visualization, safe programming, and diagnostics of your overall system.

Well-defined interfaces, object-oriented programming, and individually adaptable functions are just a few of the new features of PLCnext Engineer.

Your advantages:

- Time and cost savings, thanks to faster and fully integrated programming in a single interface
- Less work and training involved, thanks to the optimized user interface
- Flexible engineering, thanks to the integration of individual add-in functions in the free basic version
- Simplified engineering process, thanks to improved workflow and object-oriented programming

Add-ins for individual software solutions

The new license model is based on a free software platform that already includes comprehensive functions for your engineering projects.

By purchasing additional add-in functions, further functions and interfaces can be activated, for example. This provides you with an individual software solution that is tailored to your application requirements.

Technical data

Hardware requirements	
Processor	Min. Intel® Core™ i5
Main memory (RAM)	min. 2 GByte
Hard disk memory	min. 2 GByte
Operating equipment	Keyboard, mouse
Monitor resolution	HD (1920 x 1080)
Software requirements	
Operating system	Windows® 7 Professional SP1 (64-Bit) Windows® 7 Ultimate SP1 (64-Bit) Windows® 10 (64-Bit), ab Build 1709
Software platform	.NET Framework 4.7.1
Basic functions	
	Programming an automation system in acc. with IEC 61131-3 Planning an automation system Setting of hardware and network parameters Network-oriented or fully graphical programming Web-based visualization based on open standards such as HTML5 and JavaScript
Languages supported	
	German, English

Ordering data

Description	Type	Order No.	Pcs./Pkt.
Engineering software platform for Phoenix Contact automation controllers. PLCnext Engineer is IEC 61131-3-compliant and its functionality can be extended using add-ins.	**PLCNEXT ENGINEER**	1046008	1

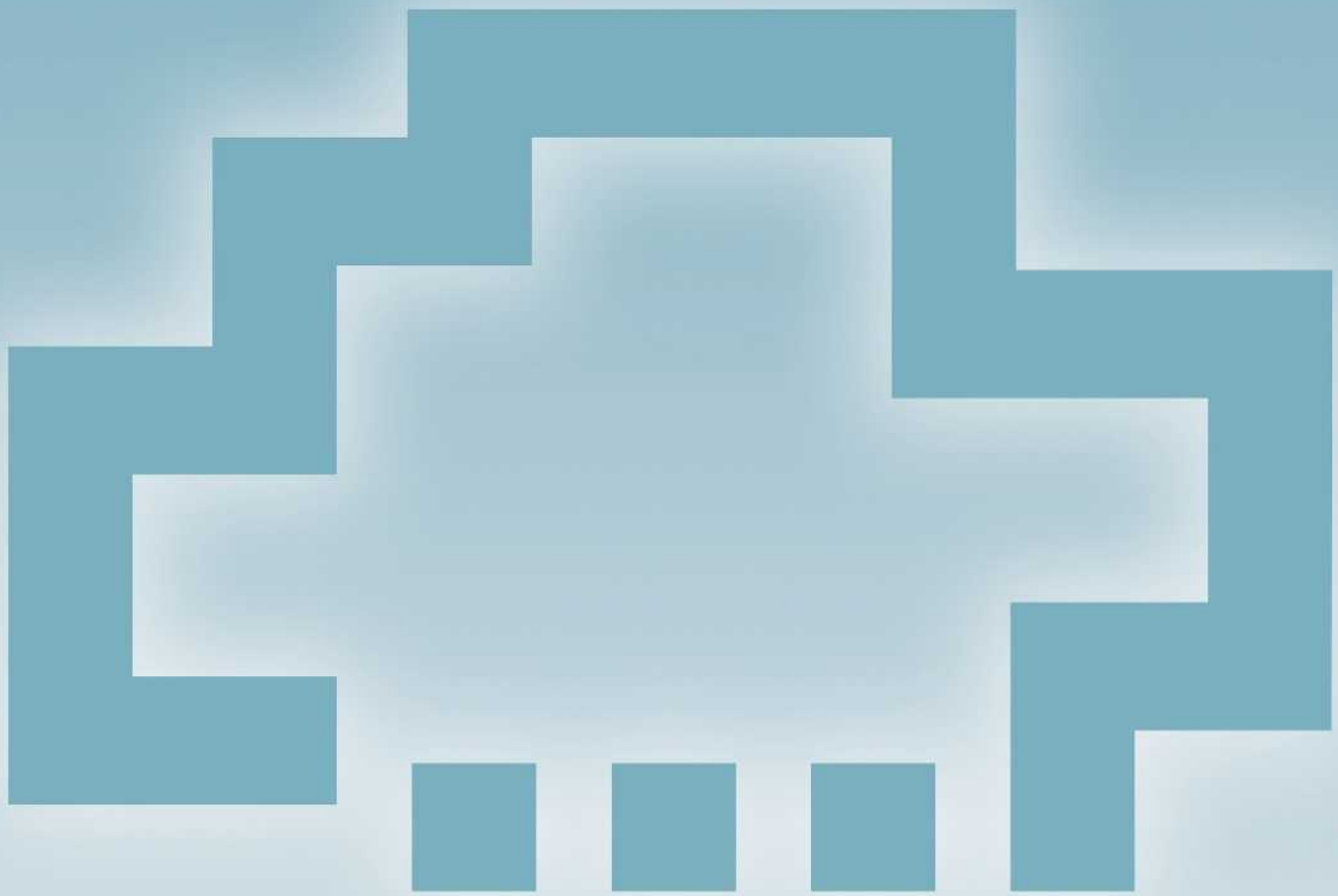

PROFICLOUD

Industrial cloud computing

Open to the world, succeed securely – New market opportunities with Proficloud

Proficloud from Phoenix Contact offers comprehensive cloud solutions that are tailored to your needs. Network your production and development operations worldwide beyond enterprise boundaries.

As an open, scalable IoT platform, Proficloud offers intelligent communication, networked control technology, smart cloud services, and comprehensive data analysis. The platform delivers the highest level of security. Proficloud solutions meet the new requirements of automation and enable new digital business models.

Make the right decisions today for your future and join us in the world of Proficloud.

Professional cloud solutions

Future-proof automation with Proficloud	**18**
TSD and PROFINET cloud services	**19**
Cloud IoT Gateway	**20**
Software Development Kit	**21**
Cloud credits	**21**
Cloud controller for PROFINET service	**22**
Cloud coupler for PROFINET service	**23**
Cloud components for PROFINET	**23**

Future-proof automation with Proficloud

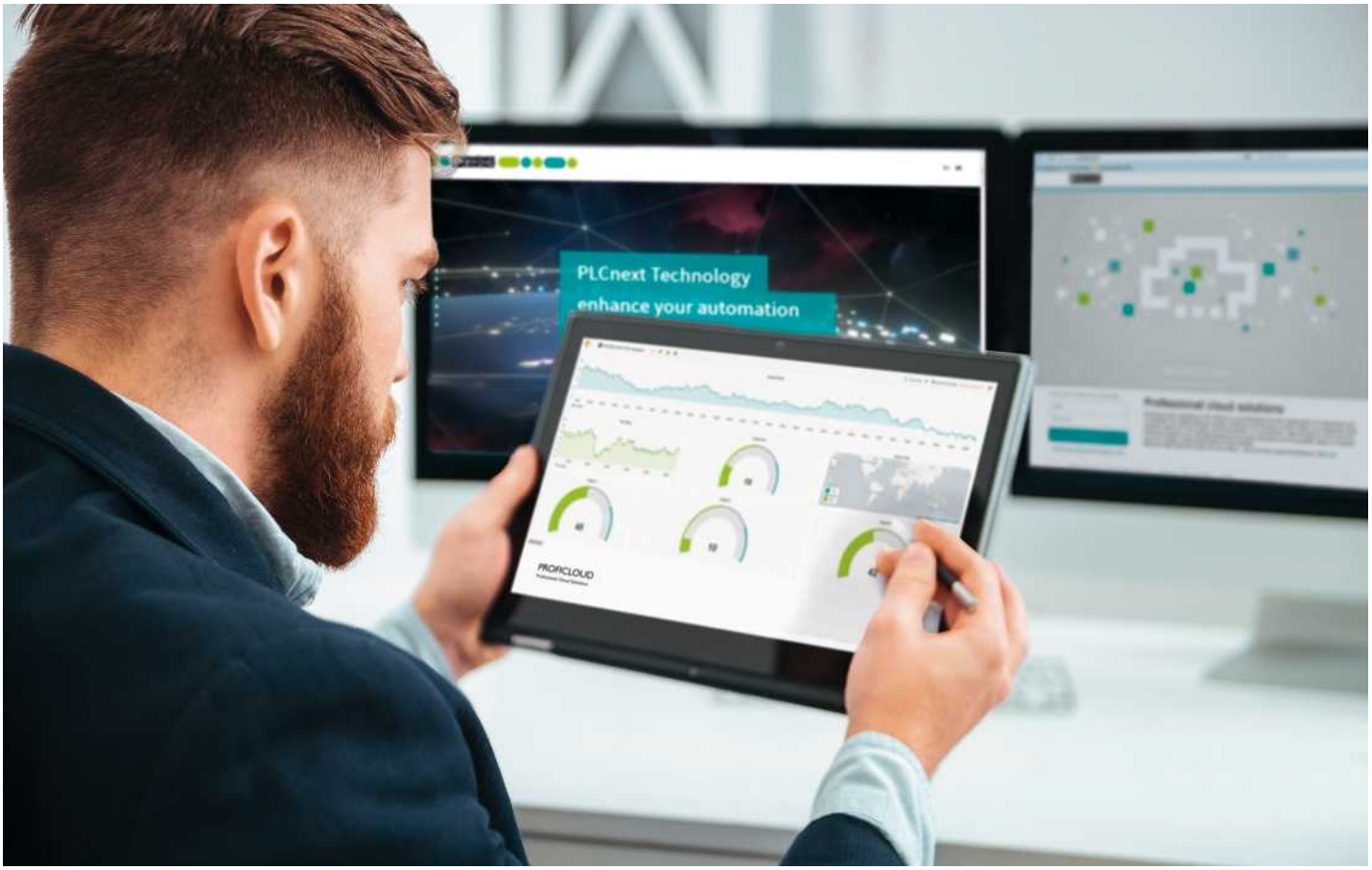

To implement the guiding principles of the IoT, machines and facilities around the world must be comprehensively networked, and field devices equipped with additional cloud services. This is the only way to exchange data easily, safely, and reliably and to integrate external information into the overall solution. Implementation using the open and scalable Proficloud IoT platform ensures the required performance and flexibility in your automation solutions.

Big data applications

With Proficloud, you can capture your machine and system data from anywhere in the world and combine large volumes of data from different sources. Using modern data analysis as a foundation, you can make informed decisions, produce forecasts, and improve your operations process control.

Integration of services

Cloud services can be easily integrated into your automation solution. Extend your applications with services such as monitoring, reporting, energy data management, calculations, and predictive maintenance. You can do this using existing cloud services from our range, or create your own individual cloud services with our Software Development Kit.

Consistent security concept

A deeply integrated security concept provides you with maximum security. The Trusted Platform Module (TPM) for secure encryption management protects against unauthorized access to stored data. All data is transmitted with TLS 1.2 (Transport Layer Security) encryption and authentication.

Cloud services

With the Time Series Data (TSD) and PROFINET cloud services, Phoenix Contact provides you with cloud-based automation solutions that are perfectly tailored to your company's requirements. You can thus benefit from rapid value creation and full cost transparency, thanks to pay-per-use billing.

Your advantages:

- Maximum availability, as you can access your data anytime, anywhere
- Openness, as you can develop your own cloud services for Proficloud and operate them in Proficloud
- Flexibility, thanks to the ability to integrate new functions and technologies quickly and easily
- Scalability, thanks to dynamic IT services that can be quickly and individually adapted to your requirements
- Secure and certified communication, thanks to TLS encryption

TSD and PROFINET cloud services

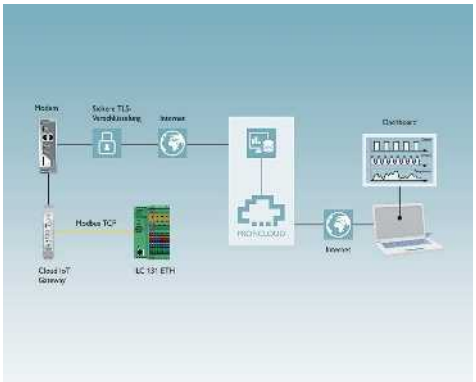

Time Series Data (TSD) cloud service

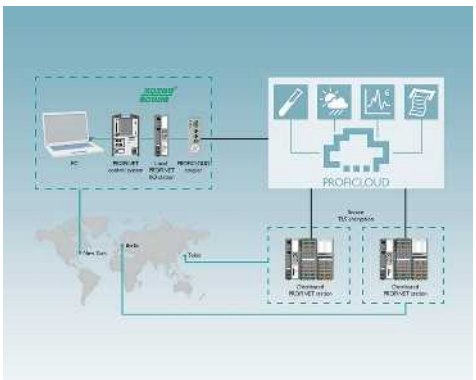

PROFINET cloud service

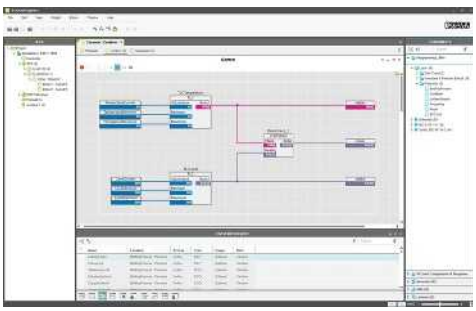

Grafana web-based dashboard

Time Series Data (TSD)

Time Series Data enables you to capture, evaluate, and visualize the process data from your machines and systems. This forms the basis for predictive maintenance and other big data applications. Thanks to web-based dashboards, you have access to your data anywhere and at any time.

The TSD service provides simple and user-friendly device management. In addition to the Cloud IoT Gateway, other devices from Phoenix Contact can be integrated into the solution and managed, e.g., the PLCnext Control AXC F 2152 controller. Using a UUID (Universally Unique Identifier), each component can be clearly identified and integrated into Proficloud. Once the devices have been added to Proficloud, the transmitted data appears in the cloud immediately. Just a click of the mouse takes you to the TSD Analytics application, which you can use to configure custom dashboards online.

Phoenix Contact offers other devices with Modbus/TCP communication. These include small-scale controllers from the Inline product family and energy measuring devices from the EMpro series. When used in conjunction with the Cloud IoT Gateway, any data from the controller can be stored in Proficloud. You can then analyze the data there, in order to identify optimization potential in the system, for example.

PROFINET

Easily connect your existing PROFINET network to the cloud. Benefit from the advantages, e.g., for remote applications or when using services such as monitoring, reporting or calculation.

Thanks to the innovative linking of proven automation standards and current IT technologies, Proficloud enables you to bring the PROFINET fieldbus system to the cloud. This means that you can now monitor the state of your remote systems distributed around the world no matter where you are. By evaluating the data that is collected, potential failures can be detected in good time, thereby avoiding unnecessary costs and work.

Proficloud-capable controllers at distributed locations connect to Proficloud via the Internet. Thanks to the patented technology, the Proficloud coupler provides easy access to the distributed controllers from the local network – without the need for further configuration or additional programming.

Cloud IoT Gateway

The Cloud IoT Gateway connects new and existing systems to the Internet of Things without interfering with the automation logic. The Gateway collects and processes sensor and process data, and transmits it to Proficloud. This data can be used, for example, for machine monitoring or data analysis.

Features:

- Direct connection to Proficloud, the open IoT platform
- Easy configuration, thanks to web-based management
- Various protocols supported, e.g., Modbus/TCP
- Robust hardware for use in the industrial environment
- Secure transmission, thanks to TLS (Transport Layer Security) encryption
- Dashboard for easy visualization of sensor and processor data

PROFICLOUD
Professional Cloud Solutions

Cloud IoT Gateway

Technical data

Interfaces		
Ethernet		2 x RJ45
RS-232		COMBICON connector
RS-485		1 x COMBICON connector
USB 2.0		1 x USB type C
IEC 61131 runtime system		
Processor		Arm® Cortex®-A8 1x 600 MHz
Power supply		
Supply voltage		24 V DC -20% / +15%
Supply voltage range		18 V DC ... 30 V DC
Typical current consumption		200 mA
General data		
Dimensions	W / H / D	22.5 mm / 99 mm / 114.5 mm
Degree of protection		IP20
Ambient temperature (operation)		-25°C ... 55°C up to 2000 m above mean sea level

Ordering data

Description	Type	Order No.	Pcs./Pkt.
Cloud IoT Gateway for integrating new and existing systems into Proficloud without additional engineering effort	**CLOUD IOT GATEWAY**	**1031235**	1

Software Development Kit

With Proficloud you can network your production systems across locations. The Software Development Kit (SDK) allows you to freely program individual cloud services.

Your advantages:

– The PROFINET network can be extended to include individual cloud services
– Free programming possible with the SDK in Java

Software Development Kit

Description	Ordering data		
	Type	Order No.	Pcs./Pkt.
Software Development Kit, for freely programming individual cloud services			
	CLOUD SDK4J	2404475	1

Cloud credits

Different cloud credits are available for using devices in Proficloud. The credits are simply activated in the cloud application. Thanks to the pay-per-use model, you have full control of costs and are not locked into a fixed contract.

Cloud credits for Proficloud

Description	Ordering data		
	Type	Order No.	Pcs./Pkt.
Cloud credits, for using devices in Proficloud			
- Credit: 8760 units	CLOUD CREDIT-1	2402989	1
- Credit: 17,520 units	CLOUD CREDIT-2	2402988	1
- Credit: 43,800 units	CLOUD CREDIT-5	2402987	1
- Credit: 87,600 units	CLOUD CREDIT-10	2402986	1

Cloud controller for PROFINET service

The cloud controller is based on the modular Axiocontrol controller. It is connected to the Internet and links to Proficloud.

Features:

- Cloud controller for decentralized use of I/Os
- Numerous protocols supported such as: http, https, FTP, SNTP, SNMP, SMTP, SQL, MySQL, DCP, etc.
- Free engineering with PC Worx Express (IEC 61131-3)
- Up to 63 Axioline F I/O modules can be aligned directly
- Integrated UPS for targeted shutdown of the application
- Configuration via USB
- Web server HTML5 and JAVA
- SD card up to 2 GB as optional plug-in parameterization memory
- 2 x Ethernet interfaces (integrated switch)
- Increased resistance to EMI

Cloud controller for PROFINET service

Technical data

Interfaces		
Axioline F local bus		Bus base module
Ethernet		2 x RJ45 socket
USB 2.0		1 x Micro USB type B
AXIOBUS master		
Number of supported devices		max. 63
IEC 61131 runtime system		
Programming tool		PC WORX
Processor		Altera Nios II 100 MHz
Processing speed		1.3 ms (1 K mix instructions) 90 µs (1 K bit instructions)
Program memory		1 Mbyte
Mass storage		1 Mbyte
Retentive mass storage		48 kByte (NVRAM)
Number of control tasks		8
Real-time clock		Yes
Power supply		
Supply voltage		24 V DC
Supply voltage range		19.2 V DC ... 30 V DC
Typical current consumption		125 mA
General data		
Dimensions	W / H / D	45 mm / 125.9 mm / 74 mm
Degree of protection		IP20
Ambient temperature (operation)		-25°C ... 60°C

Ordering data

Description	Type	Order No.	Pcs./Pkt.
Axiocontrol for communication with Proficloud, for direct control of Axioline I/Os, with 2 Ethernet interfaces, programming options in accordance with IEC 61131-3, complete with connector and marking field	**AXC CLOUD-PRO**	2402985	1

Accessories

Parameterization memory, Flash card without license			
- 2 GB	**SD FLASH 2GB**	2988162	1
- 512 MB	**SD FLASH 512MB**	2988146	1
- 2 GB	**SD FLASH 2GB APPLIC A**	2701190	1
- 512 MB	**SD FLASH 512MB APPLIC A**	2701799	1
Programming cable			
	CAB-USB A/MICRO USB B/2,0M	2701626	1

Function modules — **See page 55**

Cloud coupler for PROFINET service

The cloud coupler securely connects the local PROFINET network to Proficloud via the Internet. Furthermore, the cloud coupler protects the local PROFINET network against unauthorized access from the Internet by means of two independent network interfaces.

Features:
- Web-based management
- Emulates up to 15 Proficloud devices
- The PROFINET network can be extended to include cloud services, without requiring any additional specialist knowledge
- Secure communication, thanks to TLS 1.2 encryption

PROFICLOUD
Professional Cloud Solutions

Cloud coupler for PROFINET service

Technical data

Computer data		
Operating system		Linux
Interfaces		2x USB 2.0
Network		2x Ethernet (10/100/1000 Mbps), RJ45
Power supply unit		24 V DC ±20%
General data		
Dimensions	W / H / D	155 mm / 145 mm / 49 mm
Degree of protection		IP20
Ambient temperature (operation)		0°C ... 50°C
EMC note		Class A product, see page 527

Ordering data

Description	Type	Order No.	Pcs./Pkt.
Cloud coupler, for connecting the local PROFINET network to Proficloud	CLOUD COUPLER-PRO	2402990	1

Cloud components for PROFINET

With the help of cloud components for PROFINET, virtually all of the information provided via the cloud can be communicated directly to the field level. For example, you can transfer ERP task data directly from Proficloud to your production system via the PROFINET protocol. Taking the indirect route, via other levels in the automation pyramid, is no longer necessary.

The system coupler cloud component connects two PROFINET networks via Proficloud.

The calculation cloud component can be used to move complex calculations to the cloud. This takes the load off local hardware and reduces costs.

The weather cloud component provides weather data from the cloud. This means that a physical weather station is no longer necessary, for example.

PROFICLOUD
Professional Cloud Solutions

Cloud components for PROFINET

Ordering data

Description	Type	Order No.	Pcs./Pkt.
License, for using a system coupler in Proficloud	CLOUD SERVICE/SYSTEMCOUPLER	2404449	1
License, for performing calculations in Proficloud	CLOUD SERVICE/CALC	2403326	1
License, for using meteorological information in Proficloud	CLOUD SERVICE/WEATHER	2403325	1

PLCnext Engineer
Engineering Software
PHOENIX CONTACT
INSPIRING INNOVATIONS
WORX
Programming
VISU+
SCADA Visualization
PHOENIX CONTACT
INSPIRING INNOVATIONS

Software

Software is the key to more efficient automation. Software tools from Phoenix Contact guide you through the entire value added process for your automation solution, from configuration to system operation. All products interact perfectly and impress with their innovative functions and intuitive, user-friendly operation. In addition, a wide range of ready-to-use block libraries is also available.

Programming
Software products for programming, from small to medium-sized applications with small-scale controllers to complex system automation with high-end PLCs.

Visualization
A good visualization software tool provides the basis for efficient automation, in the control room, production, as well as directly on the machine.

Device parameterization
Central and efficient – parameterize your field devices from the comfort of your PC.

Configuration, monitoring, diagnostics
Software tools for fast startup, constant monitoring, and reliable diagnostics.

Drivers and interfaces
Everything you need to connect additional systems to your automation solution.

Planning and configuration
Expert support with the planning and configuration of technical components. So that everything works together perfectly.

Remote control
Flexible solutions for controlling distributed automation units.

System simulation
Startup and testing made easy – in a completely virtual environment.

Marking software
Software tools for efficient marking – even in series production.

Product overview	**26**
Programming	
PC Worx and PC Worx Express	**28**
PC Worx Target for Simulink	**30**
Function blocks/libraries	**55**
Visualization	
WebVisit	**31**
Visu+	**32**
Visu+ Express	**33**
Device parameterization	
Startup+	**26**
Configuration, monitoring, diagnostics	
Config+	**34**
Diag+	**34**
Drivers and interfaces	
OPC server	**36**
Planning and configuration	
Project+	**26**
Remote control	
Portico	**38**
Resy+	**55**
PLCnext Technology	**6**

Programming

PLCnext Engineer – Engineering software platform

Page 14

PC Worx – Software package for conventional programmable logic controllers

Page 28

PC Worx Target for Simulink – Firmware library

Page 30

Logic+ – Intuitive programming software for quick and easy configuration
• See Catalog 5 – relay modules section

Your web code: #1104

SafetyProg – Programming software for PROFIsafe controllers

Page 280

Functional and industry-specific software and drivers

Page 55

Network management

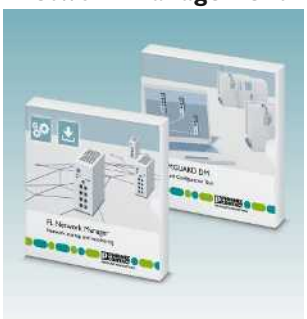

Management software for network components

Page 342

Visualization

WebVisit – Development software for web-based visualizations

Page 31

Visu+ – SCADA visualization, development and runtime licenses

Page 32

Visu+ Express – Free development software for HMI visualization

Page 33

Device parameterization

Startup+ – Software for wiring checks on Axioline F I/O stations

Your web code: #1164

IOL-CONF – Software for parameterizing IO-Link devices

Your web code: #1164

SAFECONF – Configuration software for PSR-TRISAFE and SafetyBridge modules

Page 278

PSR-CONF-WIN – Configuration software for PSR-RSM4 with connecting cable

Page 278

Configuration, monitoring, and diagnostics

Config+ – Tool for INTERBUS configuration and diagnostics

Page 34

Diag+ – Diagnostics software for INTERBUS, PROFINET, and Ethernet networks

Page 34

Diag+ NetScan – Diagnostics software for cyclic INTERBUS diagnostics

Order No. 2868075

Drivers and interfaces

OPC UA – Communication interface for PC Worx programmable controllers

Page 36

AX OPC server – Communication interface for PC Worx programmable controllers

Page 37

FL SNMP OPC server – Monitoring/ configuration of SNMP-compatible devices in HMI and SCADA systems

Page 37

Planning and configuration

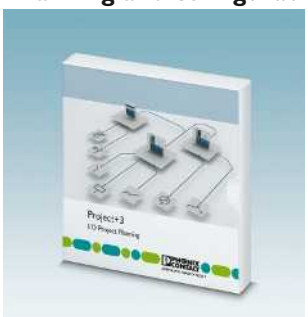

Project+ – Software for planning the I/O configuration

Your web code: #1161

Remote control

VL Portico server ... – Remote control of networked IPCs

Page 38

Resy+ – Function blocks for extending standard control and I/O components with remote control protocols

Page 55

Marking

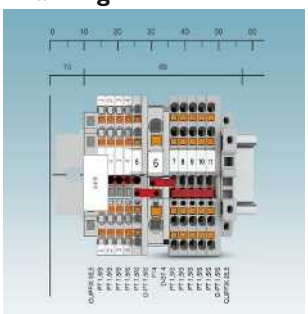

PROJECT complete – Planning and marking software
• See Catalog 3 – Marking and labeling section

Your web code: #1093

System simulation

WinMOD AX ... – System software incl. INTERBUS/PROFINET IO simulation software
Info: www.winmod.com

IB Emulator – Hardware required to simulate INTERBUS configurations with the WinMOD software
Order No. 2988638

Programming with PC Worx

PC Worx is the consistent programming software tool for conventional programmable logic controllers in accordance with IEC 61131 from Phoenix Contact. PC Worx can be used in all areas of industry.

The software includes all the programming languages defined in IEC 61131-3:
– Instruction List (IL)
– Function Block Diagram (FBD)
– Ladder Diagram (LD)
– Sequential Function Chart (SFC)
– Structured text (ST)

Efficient programming

The PC Worx interface can be customized to your individual requirements with clearly arranged workspaces and toolbars. The basic languages of IEC 61131 (LD, FBD, and IL) can be directly and freely cross compiled. Structured text can be converted into any of the three basic languages.

Wizards support and monitor the insertion of data types, function blocks, operator, and variable declarations in all editors. For text editors, another wizard is available for keywords and their command structures.

Startup and maintenance

During controller operation, the following functions round off IEC 61131 programming:
– Cross-references for editing
– Online and offline program comparison by all IEC editors and configuration data
– Startup functions
– Debug functions such as:
  - Logic analysis in real time
  - Breakpoints
  - Address debugging
  - Step-by-step mode
  - Overwriting and forcing of variables

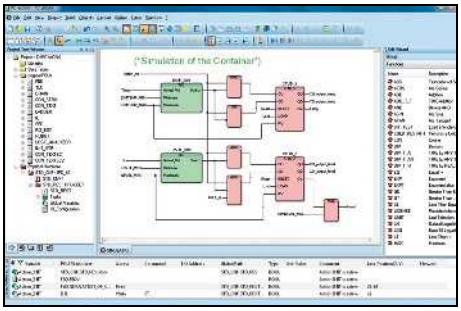

In order to test the program code, there is a powerful simulation tool for all Intel®-compatible controllers. This shortens the startup times of the real system.

All data configured in PC Worx can be reused for visualization purposes in an easy manner. This takes place via standard interfaces such as the AX OPC server or an integrated web server. The OPC and web server variables are selected with a mouse click.

Worldwide use assured

You can switch between numerous languages in the interface. Program comments can be exported and imported for translation. You can therefore save projects together with their comments in various languages.

Integrated password handling supports various protection models:
– Securing the project
– Protecting individual program organization units (POUs) against writing or reading – know-how protection
– Blocking of actions, e.g., starting/stopping the controller

I/O configuration

Network structures such as PROFINET, INTERBUS, PROFIBUS, and Modbus/TCP can be configured in PC Worx via an integrated bus configurator. A device catalog displays all components in clear groupings; the components can be transferred to the hardware configuration using drag & drop.

In connection view, the program variables are connected to the inputs and outputs of the network components. The variables are addressed automatically.

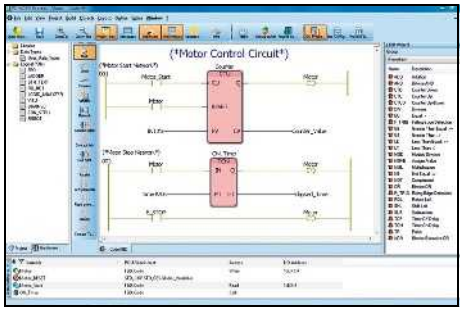

Diagnostics

The integrated Diag+ diagnostics tool is used to handle the diagnostics of all system components in the INTERBUS and PROFINET network. This tool enables precise error localization in the entire system.

Preventive diagnostic functions such as monitoring the transmission quality of fiber optic paths in INTERBUS systems increase system availability. Diagnostic data, causes of malfunctions, and solutions are displayed directly in plain text.

Programming environment for small-scale controllers

With PC Worx Express, Phoenix Contact provides you with a free software tool that can be used to easily program class 100, class 1000, and PC Worx SRT conventional programmable logic controllers. This is achieved, for example, thanks to the clearer user interface.

PC Worx Express offers numerous proven functions such as project creation, fast application development, plus easy download, monitoring, and startup of the PLC program. Intelligent automated functions speed up programming. These include the automatic insertion of program instances in the task or simplified variable handling.

PC Worx Express can be downloaded free of charge:
phoenixcontact.net/products

If the application requires the enhanced functions of PC Worx, the project created with PC Worx Express can be opened in the standard programming environment. You can transfer the configured data to PC Worx without any loss of data.

Free software tool for class 100 PLCs

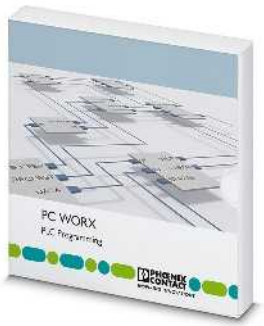

Software package for conventional PLCs

	Technical data	Technical data
Hardware requirements		
Processor	min. 2 GHz, x86 architecture	min. 2 GHz, x86 architecture
Main memory (RAM)	min. 2 GByte	min. 2 GByte
Hard disk memory	min. 2 GByte	min. 2 GByte
Optical drive	DVD-ROM	DVD-ROM
Operating equipment	Keyboard, mouse	Keyboard, mouse
Monitor resolution	SXGA (1280 x 1024)	SXGA (1280 x 1024)
Software requirements		
Operating system	Windows® 7 Professional SP1 (32-Bit/64-Bit) Windows® 7 Ultimate SP1 (32-Bit/64-Bit) Windows® 8.1 Professional (32-Bit/64-Bit) Windows® 8.1 Enterprise (32-Bit/64-Bit) Windows® 10 (32-bit/64-bit), as of Build 1511	Windows® 7 Professional SP1 (32-Bit/64-Bit) Windows® 7 Ultimate SP1 (32-Bit/64-Bit) Windows® 8.1 Professional (32-Bit/64-Bit) Windows® 8.1 Enterprise (32-Bit/64-Bit) Windows® 10 (32-bit/64-bit), as of Build 1511
Supported browsers	Internet Explorer Version 8 or later	Internet Explorer Version 8 or later
Basic functions		
	Configuring an automation system, parameterizing INTERBUS devices, operating INTERBUS, programming an automation system in acc. with IEC 61131-3, communication in acc. with IEC 61131-5	Planning an automation system, parameterizing the INTERBUS and PROFINET devices, operating INTERBUS and PROFINET, programming an automation system in acc. with IEC 61131-3. communication in acc. with IEC 61131-5
	IEC 61131 includes the following programming languages: - Function block diagram (FBD), - Ladder diagram (LD), - Structured text (ST)	Symbolic flowchart (SFC) Instruction list (IL) Ladder diagram (LD) Structured text (ST)
	Network configuration (functionality of Config+)	Network configuration (functionality of Config+)
	Network diagnostics (functionality of Diag+) - - -	Network diagnostics (functionality of Diag+) Unlimited amount of input/output data Machine Sequential Function Chart (MSFC) Fixed Format Ladder Editor (FFLD)
Languages supported		
	German, English, French, Italian, Spanish, Chinese	German, English, French, Italian, Spanish, Chinese

	Ordering data			Ordering data		
Description	Type	Order No.	Pcs./Pkt.	Type	Order No.	Pcs./Pkt.
Free programming version without license mechanism for class 100/1000 controllers and PC WORX SRT, 128 kbytes of I/O data	**PC WORX EXPRESS**	2988670	1			
Demo software with Quick Start Guide, 16 bytes of I/O data, Diag+ limited to 5 devices				**PC WORX DEMO**	2985725	1
Basic license with 2048 bytes of I/O data, without MSFC compiler				**PC WORX BASIC LIC**	2985275	1
Full license with 128 kbytes of I/O data, **with MSFC compiler included**				**PC WORX PRO LIC**	2985385	1
Low-cost upgrade of existing basic license to a full license				**PC WORX BASIC-PRO LIC**	2985259	1

PC Worx Target for Simulink

The **PC Worx Target for Simulink** firmware library allows you to integrate the functionalities of MATLAB/Simulink into the PC Worx programming software. Use this firmware library to connect MATLAB/Simulink models to RFC 470 and RFC 470S compact controllers from Phoenix Contact.

Your advantages:

- Structured program implementation and simulation/verification in advance, thanks to model-based system design
- Early-stage system simulation and startup by means of "hardware in the loop"
- Quick and easy system testing by means of "Rapid Prototyping"
- Maximized system performance by means of gradual tuning by optimized controls

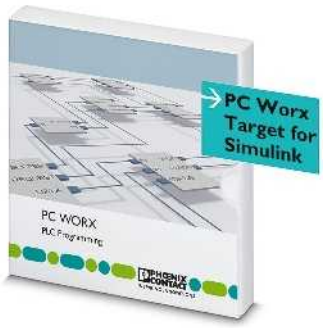

Firmware library for integration of Simulink applications

	Technical data
Software requirements	
Software requirements	MATLAB® andSimulink® R2012 and higher MATLAB® and Simulink® Coder Visual Studio 2008 Professional includes Compiler for x86 and Windows® CE, not necessary for PLCnext controllers PC WORX Version 6.30 or later or PC WORX ENGINEER Version 7.2 or later

	Ordering data		
Description	**Type**	**Order No.**	Pcs./Pkt.
Firmware library, for connecting MATLAB/Simulink models for RFC 470/RFC 470S Remote Field Controllers	**PC WORX TARGET FOR SIMULINK**	**2400041**	1

	Accessories		
Remote Field Controller	**RFC 470 PN 3TX**	**2916600**	1
Safety controller	**RFC 470S PN 3TX**	**2916794**	1

WebVisit

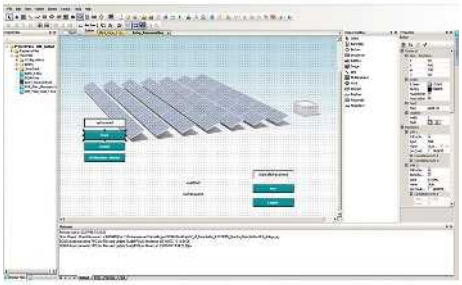

Development software for web-based visualizations

WebVisit is the right solution for implementing your web-based visualization tasks. The software is flexible, inexpensive, and easy to operate. Thanks to HTML5, all you need to display your visualization application is a standard browser. This means that you can operate and monitor your system without having to install additional software.

All Phoenix Contact controllers offer an integrated web server which forwards control data. Use this data and design visualization pages using WebVisit. Your project is then saved directly on the controller.

Your advantages:

- Intuitive operation: user interfaces can be created quickly
- No programming knowledge is necessary for the creation of visualization pages
- Display of visualization pages in any standard browser, mobile browser, and all our web panels with integrated runtime environment
- Pay once for engineering and create as many pages as you like
- Optimum workflow integration, thanks to data coupling with PC Worx and PC Worx Express

Technical data

Hardware requirements	
Processor	min. Intel® Pentium® 4 / Celeron® 1,6 GHz
Main memory (RAM)	min. 2 GByte
Hard disk memory	min. 2 GByte
Optical drive	DVD-ROM
Operating equipment	Keyboard, mouse
Monitor resolution	XGA (1024 x 768)
Software requirements	
Operating system	Windows® 7 Professional SP1 (32-Bit/64-Bit) Windows® 7 Ultimate SP1 (32-Bit/64-Bit) Windows® 8.1 Professional (32-Bit/64-Bit) Windows® 8.1 Enterprise (32-Bit/64-Bit) Windows® 10 (32-Bit/64-Bit)
Supported browsers	Internet Explorer Version 8 or later
Basic functions	
	The user interface has a functional design and even the basic version offers numerous graphic basic elements and functions. The variables needed for visualization are imported directly from PC Worx.
Languages supported	
	German, English, French

Ordering data

Description	Type	Order No.	Pcs./Pkt.
Development software for web-based visualizations	**WEBVISIT 6 BASIC**	2700948	1
Development software for web-based visualizations, with alarming, trending, and voice switchover	**WEBVISIT 6 PRO**	2700949	1
Free development software for up to ten web-based visualization pages	**WEBVISIT 6 EXPRESS**	2700954	1

Accessories

Upgrade license for upgrading from WEBVISIT 6 BASIC to WEBVISIT 6 PRO	**WEBVISIT 6 BASIC-PRO**	2700950	1

Visu+

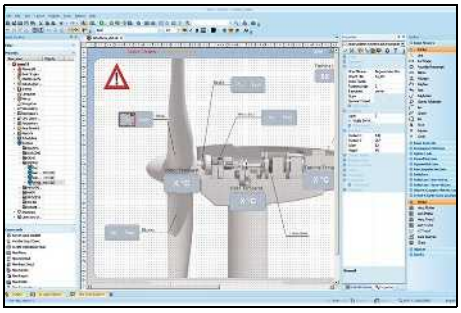

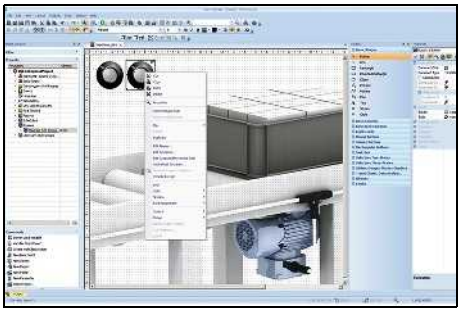

The **Visu+ 2** visualization software with SCADA functionality is suitable for every application: from a compact touch panel to an industrial PC. In addition to standard functions such as trend and alarm management, Visu+ offers comprehensive functions for alarm distribution and data logging with a link to external databases.

Visu+ 2 runs on Windows PCs as well as embedded platforms (Windows CE). Touch panels from Phoenix Contact are already equipped with the runtime component for embedded devices.

Your advantages:
- Intelligent and intuitive editor for shorter development times
- Flexible license model
- Fully scalable process images for using one design on different devices and screen sizes
- Comprehensive graphical object and symbol libraries based on vector graphics
- Connection via OPC Classic interface
- All data comprehensively recorded, archived, and immediately available, thanks to sophisticated data logger concept and connection to relational database systems
- Numerous possibilities for generating reports using a powerful and integrated report designer
- Web access via the Visu+ mobile app
- High availability, thanks to integrated redundancy function
- FDA-validated projects can be implemented easily, thanks to full support for the FDA CFR21 Part 11 specification
- Maximum flexibility, thanks to the wide range of driver interfaces for leading controller manufacturers

A good visualization software tool provides the basis for efficient automation, in production as well as directly on the machine. The free **Visu+ 2 Express** software provides an easy introduction to the visualization of typical operating and monitoring tasks.

Your advantages:
- No license fees
- Maximum flexibility, thanks to the wide range of driver interfaces for leading controller manufacturers
- Time and cost savings, thanks to the simplified user interface
- Fully scalable process diagrams for using one design on different devices and monitor sizes
- Web access via the Visu+ mobile app
- Connection via OPC Classic interface
- Scalable and fully upward compatible with Visu+ software
- Ideal for HMI applications

Mobile visualization

Extend your system visualization to smartphones or tablets with the **Visu+ mobile** visualization app from Phoenix Contact. You can design flexible operating and monitoring concepts, as the Visu+ mobile app allows you to access your system at any time and from any location.

The Visu+ license option required for the app is already enabled on numerous devices. These include the touch panels from Phoenix Contact.

Industrial PCs with a Visu+ runtime license simply need to be extended by adding the web license option.

Your advantages:
- Convenient: simply use smartphones or tablets for the visualization
- SCADA functions such as trend display or alarm handling also available on mobile devices
- Easy installation via Google Play Store or Apple App Store
- High-performance, scalable Visu+ web server: up to 100 clients can be operated simultaneously in its maximum configuration
- Easy handling: configuration only takes place in the Visu+ development environment

Visu+ 2 – License models

Find out more with the web code

You can find further information about runtime licenses for Visu+ on our website.

Simply enter # and numbers in the search field.

Your web code: #1298

SCADA visualization, development, and runtime licenses

Free development software for HMI visualization

	Technical data	Technical data
Hardware requirements		
Processor	Pentium/Celeron, 1.6 GHz	Pentium/Celeron, 1.6 GHz
Main memory (RAM)	min. 512 Mbyte (recommended: 1 GByte)	min. 512 Mbyte (recommended: 1 GByte)
Hard disk memory	min. 1 GByte (recommended: 2 GB)	min. 1 GByte (recommended: 2 GB)
Optical drive	DVD-ROM	DVD-ROM
Operating equipment	Keyboard, mouse	Keyboard, mouse
Monitor resolution	XGA (1024 x 768)	XGA (1024 x 768)
Software requirements		
Operating system	Windows® XP (SP3) Windows® Vista Business Windows® 7 Professional SP1 (32-Bit/64-Bit) Windows® 7 Ultimate SP1 (32-Bit/64-Bit) Windows® 8 Professional (32-Bit/64-Bit) Windows® 8 Enterprise (32-Bit/64-Bit) Windows® Server 2003 Windows® Server 2008 Windows® Server 2008 R2 Windows® 10 (32-Bit/64-Bit)	Windows® XP (SP3) Windows® Vista Business Windows® 7 Professional SP1 (32-Bit/64-Bit) Windows® 7 Ultimate SP1 (32-Bit/64-Bit) Windows® 8 Professional (32-Bit/64-Bit) Windows® 8 Enterprise (32-Bit/64-Bit) Windows® Server 2003 Windows® Server 2008 Windows® Server 2008 R2 Windows® 10 (32-Bit/64-Bit)
Supported browsers	Internet Explorer 5.5 or higher	Internet Explorer 5.5 or higher
Basic functions		
	Know-How protection and safety through encoding of projects Real-time database coupling with ODBC to MS ACCESS, MS EXCEL, and SQL server FDA CFR 21 Part 11 compatible	Know-How protection and safety through encoding of projects FDA CFR 21 Part 11 compatible OPC Classic Interface and direct drivers
Options		
Languages supported		
	German, English, French, Italian	German, English, French, Italian

	Ordering data			Ordering data		
Description	**Type**	**Order No.**	Pcs./Pkt.	**Type**	**Order No.**	Pcs./Pkt.
Development license for **Visu+** projects	**VISU+ 2**	2988544	1			
Development environment for all touch panels with integrated runtime of the Visu+ visualization software				**VISU+ 2 EXPRESS**	2402774	1

Config+ / Diag+

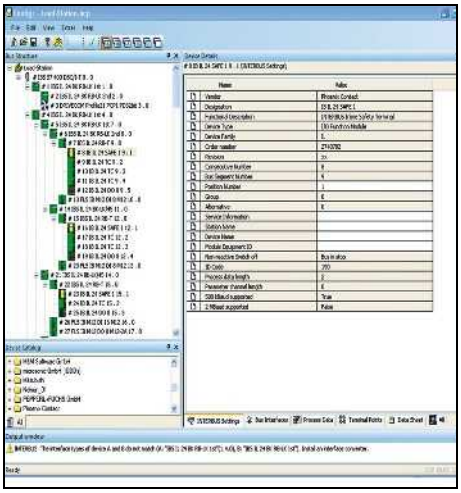

Config+ from Phoenix Contact is the ideal software solution for configuring INTERBUS networks.

Numerous functions for efficient configuration

In Config+, you can use a wide range of functions to efficiently configure systems with INTERBUS networks.

– Reading and comparing real and planned topology
– Parameterization of several master boards and controller boards in one project
– Configuration of subsystems, e.g., lower-level robot systems
– Use of various (e.g., user-defined) device catalogs
– Import and export of device catalogs
– Non-proprietary device parameterization using the FDT (field device technology) concept
– Monitoring function for wiring checks

Comprehensive diagnostics for INTERBUS networks

Reliable diagnostics are essential for high system availability. INTERBUS networks can be diagnosed reliably with the Diag+ diagnostics tool integrated in Config+.

Comprehensive diagnostics for PROFINET and INTERBUS networks

Diag+ is a special diagnostic software tool that has been adapted to PROFINET and INTERBUS, which indicates network errors as well as the current states of controllers and devices.

Wide range of functions for reliable diagnostics

Status information, operating functions, plain text messages, and overviews ensure fast startup, error localization, and easy orientation in PROFINET and INTERBUS systems.

– Start and stop of INTERBUS data traffic
– Acknowledgment of INTERBUS error messages
– Display of error messages with tips for error removal and detailed information on the device type and device state
– Display of color symbols for errors and device states
– Generation of acceptance reports as PDF files
– Integration in other software tools such as visualizations
– Display of stored messages from the message archive of the controller
– Overview for the topology of Ethernet/PROFINET devices in a 2D graphic
– Specification of the accessibility of Ethernet/PROFINET devices
– Management of individual rights of use for various users

Tool for fieldbus and network configuration

Diagnostics software for INTERBUS, PROFINET and Ethernet networks

	Technical data	Technical data
Hardware requirements		
Processor	min. 2 GHz, x86 architecture	min. 2 GHz, x86 architecture
Main memory (RAM)	min. 2 GByte	min. 2 GByte
Hard disk memory	min. 2 GByte	min. 2 GByte
Optical drive	DVD-ROM	DVD-ROM
Interfaces	Serial interface, Ethernet, PCI	Serial interface, Ethernet, PCI
Operating equipment	Keyboard, mouse	Keyboard, mouse
Monitor resolution	SXGA (1280 x 1024)	SXGA (1280 x 1024)
Supported controllers	Further controller boards on request.	INTERBUS generation 4 controller boards, PROFINET controller (Phoenix Contact only)
Software requirements		
Operating system	Windows® 7 Professional SP1 (32-Bit/64-Bit) Windows® 7 Ultimate SP1 (32-Bit/64-Bit) Windows® 8.1 Professional (32-Bit/64-Bit) Windows® 8.1 Enterprise (32-Bit/64-Bit) Windows® 10 (32-bit/64-bit), as of Build 1511	Windows® 7 Professional SP1 (32-Bit/64-Bit) Windows® 7 Ultimate SP1 (32-Bit/64-Bit) Windows® 8.1 Professional (32-Bit/64-Bit) Windows® 8.1 Enterprise (32-Bit/64-Bit) Windows® 10 (32-bit/64-bit), as of Build 1511
Supported browsers	Internet Explorer Version 8 or later	Internet Explorer Version 8 or later
Termination boards supported		
	IBS S7 400 DSC/I-T 2719962 IBS S7 300 DSC-T 2719975 IBS PCI SC/RI/I-T 2730080 IBS PCI SC/RI-LK 2730187 IBS PCI SC/I-T 2725260 IBS PCI SC-LK 2700318 FL IL 24 BK-PAC 2862314 FL IL 24 BK-B-PAC 2862327 FL NP PND-4TX IB 2985974 FL NP PND-4TX IB-LK 2985929 FLM BK ETH M12 DI 8 M12-2TX 2736916 IL ETH BK DI8 DO4 2TX-PAC 2703981 IBS USC4-2 2812209	
Basic functions		
	Project planning of Ethernet configurations Planning of the address assignment Comparison between real and planned bus configuration Comprehensive diagnostic functions, including optical diagnostics with Diag+ Network diagnostics (functionality of Diag+)	Reading in the installed bus structure Detecting/representing error states (plain text from knowledge database) Diagnostics of INTERBUS FO paths (transmission quality) Reading out the Controller Diagnose Archive Numerous other diagnostic functions
Languages supported		
	German, English, French, Italian, Spanish, Chinese	German, English, French, Italian, Spanish, Chinese

	Ordering data			Ordering data		
Description	Type	Order No.	Pcs./Pkt.	Type	Order No.	Pcs./Pkt.
Config+ demo version with limited scope of functions (it is not possible to save projects)	**CONFIG+ DEMO**	2868046	1			
Config+ full version for configuration and diagnosis of networks	**CONFIG+**	2868059	1			
Diag+ demo, limited scope of functions (only valid for the first five stations)				**DIAG+ DEMO**	2730734	1
Diag+ full version, for INTERBUS diagnostics (ActiveX Control with programming interface)				**DIAG+**	2730307	1
	Accessories			**Accessories**		
Copy license, allows you to install the software multiple times. A full version is also required. Please specify the number of licenses required when ordering.	**CONFIG+ CPY**	2868062	1	**DIAG+ CPY**	2730404	1

OPC server

Implement data exchange quickly and reliably between the following devices using OPC servers:
– PC Worx-programmable controllers
– SNMP (Simple Network Management Protocol)-compatible devices

The standardized OPC UA (Unified Architecture) and OPC DA (Data Access) interfaces enable easy integration in OPC-compatible visualization and control systems.

The **PC Worx UA SERVER** supports the PLCopen profile for controllers in accordance with the OPC UA standard. Variables and structures of PC Worx-programmable controllers are provided in a common address area.

The **AX OPC SERVER** operates in accordance with the OPC DA standard and is used for data exchange between control systems, quality management systems or HMI stations with PC Worx-based controllers.

The **SNMP OPC SERVER V3** gathers device and network information which can be read via SNMP. In this way, you can integrate your SNMP-compatible devices into OPC-based process control systems (SCADA) or into HMI systems.

OPC UA – communication interface for PC Worx-programmable controllers

	Technical data
Hardware requirements	
Processor	min. Intel® Core™ i3-2100 (2 GHz)
Main memory (RAM)	min. 2 GByte
Hard disk memory	-
Optical drive	-
Operating equipment	-
General requirements	
Operating system	Windows® 7 (32-Bit/64-Bit) Windows® 8.1 (32-Bit/64-Bit) Windows® 10 (32-Bit/64-Bit) Windows® Server 2012 Windows® Server 2016
Software requirements	PC Worx Version 6 or later
Basic functions	
	Data exchange in accordance with DA profile spec 1.02 (2012) Security Policies: None, Basic128RSA15, Basic256 Message Security: Mode none, sign, sign&encrypt Communication profile in accordance with the PC-based server via binary protocol using TCP/IP Easy access to arrays and structures Variable mapping in accordance with PLCopen profile spec 1.00
Languages supported	
	English

Ordering data

Description	Type	Order No.	Pcs./Pkt.
OPC UA server for communication with a maximum of 10 modular small-scale controllers - ILC 1x1, AXC 1xxx	**PC WORX UA SERVER-PLC 10**	2402684	1
OPC UA server for communication with a maximum of 25 controllers - ILC 1x1, AXC 1xxx, AXC 3xxx, PC WORX RT BASIC/SRT	**PC WORX UA SERVER-PLC 40**	2402685	1
OPC UA server for communication with a maximum of 200 controllers - ILC 1x1, AXC 1xxx, AXC 3xxx, RFC 460R, RFC 480S, PC WORX RT BASIC/SRT	**PC WORX UA SERVER-PLC 80**	2402686	1
AX OPC SERVER, communication interface for OPC-compatible visualization with PC Worx-based controllers - ILC 1x1, AXC 1xxx, ILC 3xx, AXC 3xxx, RFC 4xx, PC WORX RT BASIC/SRT			
SNMP OPC server, for monitoring and configuring a maximum of 100 SNMP-compatible devices in HMI and SCADA systems			
Extension license for 100 devices			

OPC DA – communication interface for PC Worx-programmable controllers

Monitoring/configuration of SNMP-compatible devices in HMI and SCADA systems

Technical data

min. Intel® Core™ i3-2100 (2 GHz)	PC Pentium > 266 MHz
min. 1 GByte (2 GB for Windows Vista and Windows 7)	-
min. 2 GByte	min. 20 Mbyte
-	CD-ROM
-	Keyboard, mouse recommended
Windows® 7 Professional SP1 (32-Bit/64-Bit) Windows® 7 Ultimate SP1 (32-Bit/64-Bit) Windows® 8.1 Professional (32-Bit/64-Bit) Windows® 8.1 Enterprise (32-Bit/64-Bit) Windows® 10 (32-bit/64-bit), as of Build 1511	Windows® XP (SP3) Windows® 7 Windows® 10 Windows® Server 2008 Windows® Server 2003 Windows® Vista Business
PC WORX Version 3 or later	-
Supports OPC standard functions and all the optional interfaces (in accordance with OPC spec. DA 1.0a and DA 2.04/2.05)	Monitoring and configuration of 100 SNMP-compatible devices in HMI/SCADA systems
Simultaneous support to several controllers	Network monitoring with HMI/SCADA systems
Integrated OPC testing and diagnostics client	SNMP Version v1 and v2c supported
-	OPC clients OPC Data Access 1.0A/2.0 or OPC Alarm and Events supported
-	Integrated MIB browser
	Import/export and creation of device profiles supported, online and remote configuration possible via remote PCs
German, English	German, English

Ordering data

Type	Order No.	Pcs./Pkt.
AX OPC SERVER	2985945	1

Ordering data

Type	Order No.	Pcs./Pkt.
FL SNMP OPC SERVER V3	2701139	1
FL SNMP OPC SERVER V3 LIC 100	2701138	1

Portico

Optimally tailor your operating concept to the requirements of your system. With the Portico software, you can install up to 16 thin clients exactly where you need them. If multiple employees based in various locations need to access the machine, you can design individual solutions in this way.

Portico is a remote control software tool that allows you to view and fully interact with the desktop of another industrial PC over a network. The software uses a client/server architecture that either supports point-to-point connection between a server and client or allows communication to be established between a server and multiple clients. Thanks to the unique assignment of access rights, your system is also protected against unauthorized access.

Portico can also be used in a production environment to visualize or control a machine or process at a remote location in the system.

Your advantages:

- Individual operation and monitoring concepts with up to 16 clients
- Simultaneous display of IPC screen information at several operating stations without server operating system
- Inexpensive, thanks to the use of thin clients
- Configuration tool for user-friendly management of access rights
- Fast screen and input response, thanks to communication via TCP/IP network protocol
- Low memory usage by server and client

System requirements:

- CPU type/class: x86
- Minimum CPU clock rate: 1.0 GHz
- Minimum RAM: 512 MB
- Minimum memory required for server: 100 MB
- Minimum memory required for client: 100 MB
- LAN rate: 100 Mbps
- Graphics requirements: unlimited

Remote control software

	Technical data
Hardware requirements	
Processor	Atom™ or above
Main memory (RAM)	≥ 512 Mbyte (minimum)
Hard disk memory	≥ 100 Mbyte (minimum (client and server))
Software requirements	
Operating system	Windows® 7 Windows® 10
Basic functions	Remote control software
Languages supported	German, English, French, Spanish, Italian

Ordering data

Description	Type	Order No.	Pcs./Pkt.
Remote control			
- 1 client	**VL PORTICO SERVER 1 CLIENT**	2701453	1
- 4 clients	**VL PORTICO SERVER 4 CLIENT**	2701455	1
- 16 clients	**VL PORTICO SERVER 16 CLIENT**	2701456	1

RUN/PROG
STP
MRESET
CONTROL
RUN
Projektname:
UM_RFC_470S_PN
SAFETY PN CONTROL
RUN
INTERBUS MASTER
RUN
PROFINET CONTROL
ACT
PROFINET DEVICE
ACT
DISPLAY
PHOENIX CONTACT
RFC 470S PN 3TX
Ord.No 29 16 794
LNK
LAN 1.1
ACT
LNK
LAN 1.2
ACT
USB
LNK
LAN 2
ACT
COM1
REMOTE
CE

Conventional PLCs and small-scale controllers

Would you like to program in accordance with IEC 61131-3? In order to satisfy your requirements, we offer controllers in all performance classes. Use our PLCs, for example, in machine building and systems manufacturing, renewable energy or automotive applications. Utilize our PLC systems with the matching I/Os or select a high-performance controller for maximum performance.

Axiocontrol – Fast, robust, easy

Axiocontrol (AXC) controllers are designed for maximum performance, easy handling, and use in harsh industrial environments. All models support modular extension with the Axioline F I/O system.

Inline controllers – Flexible and cost-effective

Inline controllers (ILC) are the proven standard in the PLC portfolio. The controllers support all common communication paths, such as Ethernet and mobile communication. In addition, they can be easily extended with versatile Inline I/O terminals and provide optimum communication with an integrated, freely programmable web server.

High-performance PLCs

Redundant and safe controllers with maximum performance. Thanks to the powerful processor, comprehensive automation tasks can be processed at maximum speed.

Product overview 42

Conventional PLCs

Axiocontrol 44

Inline controllers 48

High-performance PLCs 52

Software PLC 54

Software for control technology 55

Starter kits 56

Programmable logic relay system 58

Services for automation 60

PLCnext Technology 6

Industrial cloud computing 17

PLCnext Control

PLCnext Control AXC F 2152 –
Controller for PLCnext Technology
Page 10

PLCnext Control RFC 4072S –
High-performance safety PLC for
PLCnext Technology
Page 11

COMPLETE line

The comprehensive solution for
your control cabinet:
Easy planning, intuitive installation
Page 522

Axiocontrol

Class 1000
Page 44

Class 3000
Page 45

PLC for the energy industry
Page 46

Inline controller

PLC for building infrastructure
Page 47

Class 100
Page 48

Class 100 for machine building
Page 50

Class 100 for remote communication
Page 51

High-performance PLCs

Class 400
Page 52

Software PLC

PC Worx RT Basic –
Software PLC with real-time extension
Page 54

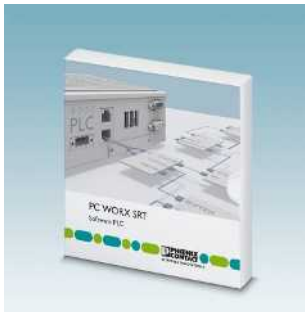

PC Worx SRT –
Software PLC without real-time extension
Page 54

Starter kits

Starter kit for automation with PLCnext Control
Page 13

Starter kit for automation with small-scale controllers – PROFINET
Page 56

Starter kit for automation with small-scale controllers – INTERBUS
Page 57

Software for control technology

Functional and industry-specific software and drivers
Page 55

Software for control technology

PLCnext Engineer – Engineering software platform
Page 14

PC Worx – Software package for conventional programmable logic controllers
Page 28

PC Worx Express – Free software package for class 100 programmable logic controllers
Page 28

WebVisit – Development software for web-based visualizations
Page 31

Programmable logic relay system

Programmable logic relay system
Page 58

Services for automation

Services – Hotline, on-site service, startup support, professional workshops
Page 60

Training – Individual training concepts, training courses
Page 60

Engineering – Configuration, programming, visualization, coaching
Page 60

I/O systems

I/O systems for the control cabinet (IP20)
Page 100

I/O systems for field installation (IP67)
Page 166

System cabling

• See Catalog 5 – System cabling for controllers

Your web code: #0702

Charging controllers

• See Catalog 7 – Charging technology for electromobility

Your web code: #0501

Class 1000

The AXC 1050 Axiocontrol controllers are fast, robust, and user-friendly, i.e., they are all designed for maximum performance, easy handling, and use in harsh industrial environments.

Together with the Axioline I/O systems they form a high-performance, flexible, and particularly resistant automation system for every requirement.

Thanks to the integrated UPS, you can respond promptly to any voltage failures. Push-in connection technology simplifies wiring noticeably and also saves time.

Your advantages:

- Maximum flexibility – numerous I/Os and function modules can be mounted side by side
- Cost-effective solution, thanks to the excellent price/performance ratio with high function density
- Optimum communication, thanks to integrated, freely programmable web server
- Versatile use, as all common IT protocols are supported

Additional features:

- Continuous shock-resistant up to 10g
- Increased EMC robustness
- SD card slot: for quick memory expansion and easy enabling of software blocks
- FTP server
- Flash file system
- Complete Axiobus master
- Integration of IT standards: FTP, HTTP, HTTPS, SNMP, SMTP, SQL, ODP, OPC, and many more
- Web-based management for easy diagnostics
- Integrated PROFINET controller and integrated PROFINET device

AXC 1050 (XC):

- Modbus/TCP (client and server) is integrated in the firmware – this increases performance and simplifies configuration
- Intuitive programming using PC Worx or using the free PC Worx Express software (IEC 61131−3)
- Visualization with WebVisit software (HTML5, Java)

Notes:

You can find matching I/O modules for these controllers from page 66

Axiocontrol small-scale controller

Technical data

		AXC 1050	AXC 1050 XC
Interfaces			
Axioline F local bus		Bus base module	
Ethernet		2 x RJ45 socket	
Parameterization/operation/diagnostics		1 x Micro USB type B	
AXIOBUS master			
Number of supported devices		max. 63 (per station)	
IEC 61131 runtime system			
Programming tool		PC WORX PC WORX EXPRESS	
Processor		Altera Nios II 1x 100 MHz	
Program memory		2 Mbyte	
Mass storage		2 Mbyte	
Retentive mass storage		48 kByte (NVRAM)	
Number of data blocks		depends on mass storage	
Number of timers, counters		depends on mass storage	
Number of control tasks		8	
Real-time clock		Yes	
Power supply			
Supply voltage		24 V DC	
Supply voltage range		19.2 V DC ... 30 V DC	
Typical current consumption		125 mA	
General data			
Dimensions	W / H / D	45 mm / 125.9 mm / 74 mm	
Degree of protection		IP20	
Ambient temperature (operation)		-25°C ... 60°C	-40°C ... 70°C (observe derating as per user manual)
EMC note		Class A product, see page 527	

Ordering data

Description	Type	Order No.	Pcs./Pkt.
Axiocontrol, complete with accessories (connector and marking field)			
	AXC 1050	**2700988**	1
- with extended temperature range	**AXC 1050 XC**	**2701295**	1

Accessories

Parameterization memory, Flash card without license			
- 2 GB	**SD FLASH 2GB**	**2988162**	1
- 512 MB	**SD FLASH 512MB**	**2988146**	1
- 2 GB	**SD FLASH 2GB APPLIC A**	**2701190**	1
- 512 MB	**SD FLASH 512MB APPLIC A**	**2701799**	1
Programming cable			
	CAB-USB A/MICRO USB B/2,0M	**2701626**	1

Function modules See page 55

Class 3000

The AXC 3050 is the high-end controller in the Axiocontrol range. It offers all the EMC, shock, and vibration properties of the AXC 1050, as well as Push-in connection technology and intelligent functions for sophisticated automation.

Thanks to the powerful processor and technology functions such as fast counters and event tasks, you can even implement complex applications reliably and efficiently.

Your advantages:

- Highly flexible, thanks to expansion with numerous I/O modules
- Communication in real time via PROFINET
- Optimum connection, with integrated web server and support for all common IT standards
- Maximum performance, thanks to high processor speed

Additional features:

- Micro USB interface: for fast startup or changing the PLC settings without knowing the IP address
- 3 integrated Ethernet interfaces for implementing different topologies
- Modbus/TCP (client and server) is integrated in the firmware – this increases performance and simplifies configuration
- USB A interface for easy firmware update using a USB stick
- Integrated web server for visualization with WebVisit
- FTP server
- Flash file system
- Numerous protocols supported such as: HTTP, FTP, SNTP, SNMP, SMTP, SQL, MySQL, etc.
- Complete Axiobus master
- Integrated PROFINET controller and integrated PROFINET device

Notes:

You can find matching I/O modules for these controllers from page 66

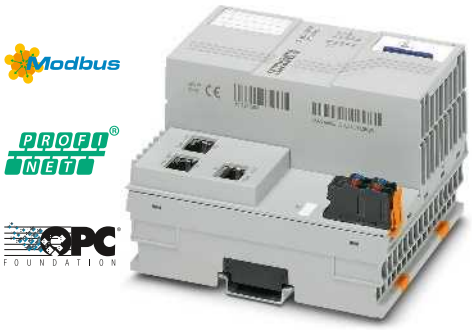

Axiocontrol high-performance controller

Technical data

Interfaces		
Axioline F local bus		Bus base module
Ethernet		3 x RJ45 socket
Parameterization/operation/diagnostics		1 x Micro USB type B
Service		1 x USB type A, socket
AXIOBUS master		
Number of supported devices		max. 63 (per station)
IEC 61131 runtime system		
Programming tool		PC WORX
Processor		Intel® Atom™ E660 1x 1.3 GHz
Program memory		4 Mbyte
Mass storage		8 Mbyte
Retentive mass storage		128 kByte
Number of data blocks		depends on mass storage
Number of timers, counters		depends on mass storage
Number of control tasks		16
Real-time clock		Yes
Power supply		
Supply voltage		24 V DC
Supply voltage range		19.2 V DC ... 30 V DC
Typical current consumption		typ. 408 mA (without I/Os and U_L = 24 V)
General data		
Dimensions	W / H / D	100 mm / 125.9 mm / 74 mm
Degree of protection		IP20
Ambient temperature (operation)		-25°C ... 60°C (up to 2000 m above sea level)
EMC note		Class A product, see page 527

Ordering data

Description	Type	Order No.	Pcs./Pkt.
Axiocontrol, complete with accessories (connector and marking field)			
	AXC 3050	**2700989**	1

Accessories

Parameterization memory, Flash card without license			
- 2 GB	**SD FLASH 2GB**	**2988162**	1
- 512 MB	**SD FLASH 512MB**	**2988146**	1
- 2 GB	**SD FLASH 2GB APPLIC A**	**2701190**	1
- 512 MB	**SD FLASH 512MB APPLIC A**	**2701799**	1
Programming cable			
	CAB-USB A/MICRO USB B/2,0M	**2701626**	1

Function modules **See page 55**

PLC for the energy industry

Now you can also use the robust AXC 1050 controller for applications in the energy industry.

The license on the SD card enables you to activate the communication protocol and quickly develop IEC-61850-compliant interfaces. The APPLIC A extension also gives you a license for further function block libraries.

Your advantages:

- Direct use of the IEC 61850 data model
- Flexible, thanks to freely programmable control functionality
- Simultaneous communication via Modbus/TCP and PROFINET

Additional features:

- Communication in accordance with IEC 61850-5, MMS, and GOOSE
- Automatic time stamping

Notes:

You can find matching I/O modules for these controllers from page 66

IEC 61850 solution

Technical data

Interfaces		
Axioline F local bus		Bus base module
Ethernet		2 x RJ45 socket
Parameterization/operation/diagnostics		1 x Micro USB type B
AXIOBUS master		
Number of supported devices		max. 63 (per station)
IEC 61131 runtime system		
Programming tool		PC WORX PC WORX EXPRESS
Processor		Altera Nios II 1x 100 MHz
Program memory		2 Mbyte
Mass storage		2 Mbyte
Retentive mass storage		48 kByte (NVRAM)
Number of data blocks		depends on mass storage
Number of timers, counters		depends on mass storage
Number of control tasks		8
Real-time clock		Yes
Power supply		
Supply voltage		24 V DC
Supply voltage range		19.2 V DC ... 30 V DC
Typical current consumption		125 mA
General data		
Dimensions	W / H / D	45 mm / 125.9 mm / 74 mm
Degree of protection		IP20
Ambient temperature (operation)		-25°C ... 60°C
EMC note		Class A product, see page 527

Ordering data

Description	Type	Order No.	Pcs./Pkt.
Axiocontrol, complete with accessories (connector and marking field)			
	AXC 1050	2700988	1
- with extended temperature range	**AXC 1050 XC**	2701295	1
Program and configuration memory, Flash card with license key for IEC 61850 communication			
- 2 GB	**SD FLASH 2GB 61850**	2400435	1
- 2 GB, with license key for activating further function block libraries	**SD FLASH 2GB APPLIC A 61850**	2400436	1

Accessories

Programming cable			
	CAB-USB A/MICRO USB B/2,0M	2701626	1
Function modules	**See page 55**		

PLC for building infrastructure

You can use the ILC 2050 BI controller to automate different subsections in the building infrastructure, data centers, and distributed properties. The integrated Niagara Framework enables you to have IoT-based automation due to standardization of various data types.

Your advantages:

- Reduced startup costs, thanks to different protocols
- Standardized integration of sensors and actuators
- Easy programming using drag & drop
- Web-based maintenance, monitoring, and programming from any location
- Functionality can be extended with the Inline I/O range

Additional features:

- Integrated safety functions
- Flexible licensing
- Supports numerous protocols: BACnet IP, BACnet MS/TP, KNX IP, SNMP, M-Bus, DALI, Modbus

Find out more with the web code

You can find further information about engineering software for building infrastructure on our website.

Simply enter # and numbers in the search field.

Your web code: #1166

Notes:

You can find matching I/O modules for these controllers from page 100

IoT-based networking of infrastructures

Technical data

Interfaces		
Ethernet		4 x RJ45 socket, shielded
RS-485		2 x Spring-cage connection
USB 1.0/USB 2.0		1 x USB type A, socket
USB OTG		1 x Mini-USB
Other interfaces		1 x microSD slot
AXIOBUS master		
Number of supported devices		max. 63
IEC 61131 runtime system		
Programming tool		Niagara 4 WorkPlace
Processor		Arm® Cortex®-A8 1000 MHz
Program memory		512 kByte (SRAM)
Mass storage		1.8 GByte (eMMC)
Retentive mass storage		2 GByte (eMMC)
Real-time clock		Yes
Power supply		
Supply voltage		24 V DC
Supply voltage range		19.2 V DC ... 30 V DC
Typical current consumption		≤ 170 mA (at nominal voltage without local bus device)
General data		
Dimensions	W / H / D	80 mm / 119.8 mm / 71.5 mm
Degree of protection		IP20
Ambient temperature (operation)		-25°C ... 55°C

Ordering data

Description	Type	Order No.	Pcs./Pkt.
Small-scale controller			
	ILC 2050 BI	**2403160**	1

Accessories

Programming cable			
	CAB-USB A/MICRO USB B/2,0M	**2701626**	1

Class 100

Class 100 programmable logic controllers impress with their high function density. They support all common communication paths, such as Ethernet, mobile communication or fixed-line network.

Thanks to integrated Modbus/TCP and PROFINET, the controllers communicate with numerous fieldbus devices without any additional programming, both passively as a Modbus server as well as actively as a Modbus client.

As the interface between the control center and I/O level, they efficiently control the data flow within your system. In short, they are ideal for small to medium-sized applications, even in distributed systems.

Your advantages:

- Maximum flexibility – numerous I/Os and function modules can be mounted side by side
- Quick and easy integration of additional user libraries with function blocks
- Optimum communication – with integrated, freely programmable web server for visualization with the WebVisit software
- Versatile use, as all common IT protocols are supported
- High processing speed, thanks to the high-performance Altera NIOS II processor
- Easy to integrate in existing PROFINET networks by means of PROFINET device functionality

Additional features:

- Maximum flexibility in I/O connectivity, thanks to integrated fieldbus master and Modbus/TCP (client and server)
- SD card slot: for quick memory expansion and easy enabling of software blocks
- FTP server
- Flash file system
- Numerous protocols supported such as: HTTP, FTP, SNTP, SNMP, SMTP, SQL, MySQL, etc.
- Intuitive programming using PC Worx or using the free PC Worx Express software
- The XC versions are also suitable for increased temperature requirements (-40°C to +60°C)

Notes:

You can find matching I/O modules for these controllers from page 100

Basic device

Ex:

Technical data

		ILC 131 ETH	ILC 131 ETH/XC
Interfaces			
INTERBUS local bus (master)		Inline data jumper	
Ethernet		1 x RJ45 socket	
Parameterization/operation/diagnostics		1 x 6-pos. MINI DIN socket (PS/2)	
INTERBUS master			
Number of devices with parameter channel		max. 8	
Number of supported devices		max. 63	
Amount of process data		max. 2048 Bit (INTERBUS) max. 8192 Bit (internal Modbus /TCP client)	
Digital inputs/outputs			
Number of inputs		8	
Number of outputs		4	
IEC 61131 runtime system			
Programming tool		PC WORX PC WORX EXPRESS	
Processor		Altera Nios II 64 MHz	
Program memory		192 kByte	
Mass storage		192 kByte	
Retentive mass storage		8 kByte (NVRAM)	
Number of data blocks		depends on mass storage	
Number of timers, counters		depends on mass storage	
Number of control tasks		8	
Real-time clock		Yes	
Power supply			
Supply voltage		24 V DC	
Supply voltage range		19.2 V DC ... 30 V DC	
Typical current consumption		210 mA	
General data			
Dimensions	W / H / D	80 mm / 119.8 mm / 71.5 mm	
Degree of protection		IP20	
Ambient temperature (operation)		-25°C ... 55°C	-40°C ... 60°C
EMC note		Class A product, see page 527	

Ordering data

Description	Type	Order No.	Pcs./Pkt.
Compact controller, complete with accessories (connector and marking field)			
	ILC 131 ETH	2700973	1
- with extended temperature range	**ILC 131 ETH/XC**	2701034	1

Accessories

- 2 GB	**SD FLASH 2GB**	2988162	1
- 512 MB	**SD FLASH 512MB**	2988146	1
- 2 GB	**SD FLASH 2GB APPLIC A**	2701190	1
- 512 MB	**SD FLASH 512MB APPLIC A**	2701799	1
Programming cable			
	COM CAB MINI DIN	2400127	1
AX OPC SERVER, communication interface for OPC-compatible visualization with PC Worx-based controllers			
- ILC 1x1, AXC 1xxx, ILC 3xx, AXC 3xxx, RFC 4xx, PC WORX RT BASIC/SRT	**AX OPC SERVER**	2985945	1

Function modules — **See page 55**

With remote bus support

With two Ethernet ports

With integrated floating-point arithmetic

Ex:

Technical data

ILC 151 ETH	ILC 151 ETH/XC
Inline data jumper 1 x RJ45 socket 1 x 6-pos. MINI DIN socket (PS/2)	
max. 16 max. 128 max. 4096 Bit (INTERBUS) max. 16384 Bit (internal Modbus /TCP client)	
8 4	
PC WORX PC WORX EXPRESS Altera Nios II 64 MHz 256 kByte 256 kByte 8 kByte (NVRAM) depends on mass storage depends on mass storage 8 Yes	
24 V DC 19.2 V DC ... 30 V DC 210 mA	
80 mm / 119.8 mm / 71.5 mm IP20 -25°C ... 55°C	-40°C ... 60°C
Class A product, see page 527	

Ordering data

Type	Order No.	Pcs./Pkt.
ILC 151 ETH	2700974	1
ILC 151 ETH/XC	2701141	1

Accessories

SD FLASH 2GB	2988162	1
SD FLASH 512MB	2988146	1
SD FLASH 2GB APPLIC A	2701190	1
SD FLASH 512MB APPLIC A	2701799	1
COM CAB MINI DIN	2400127	1
AX OPC SERVER	2985945	1

See page 55

Ex:

Technical data

Inline data jumper 2 x RJ45 socket 1 x 6-pos. MINI DIN socket (PS/2)
max. 24 max. 128 max. 4096 Bit (INTERBUS) max. 32768 Bit (internal Modbus /TCP client)
8 4
PC WORX PC WORX EXPRESS Altera Nios II 64 MHz 512 kByte 512 kByte 48 kByte (NVRAM) depends on mass storage depends on mass storage 8 Yes
24 V DC 19.2 V DC ... 30 V DC 210 mA
80 mm / 119.8 mm / 71.5 mm IP20 -25°C ... 55°C
Class A product, see page 527

Ordering data

Type	Order No.	Pcs./Pkt.
ILC 171 ETH 2TX	2700975	1

Accessories

SD FLASH 2GB	2988162	1
SD FLASH 512MB	2988146	1
SD FLASH 2GB APPLIC A	2701190	1
SD FLASH 512MB APPLIC A	2701799	1
COM CAB MINI DIN	2400127	1
AX OPC SERVER	2985945	1

See page 55

Ex:

Technical data

Inline data jumper 2 x RJ45 socket 1 x 6-pos. MINI DIN socket (PS/2)
max. 24 max. 128 max. 4096 Bit (INTERBUS) max. 32768 Bit (internal Modbus /TCP client)
8 4
PC WORX PC WORX EXPRESS Altera Nios II 64 MHz 1 Mbyte 1 Mbyte 48 kByte (NVRAM) depends on mass storage depends on mass storage 8 Yes
24 V DC 19.2 V DC ... 30 V DC 210 mA
80 mm / 119.8 mm / 71.5 mm IP20 -25°C ... 55°C
Class A product, see page 527

Ordering data

Type	Order No.	Pcs./Pkt.
ILC 191 ETH 2TX	2700976	1

Accessories

SD FLASH 2GB	2988162	1
SD FLASH 512MB	2988146	1
SD FLASH 2GB APPLIC A	2701190	1
SD FLASH 512MB APPLIC A	2701799	1
COM CAB MINI DIN	2400127	1
AX OPC SERVER	2985945	1

See page 55

Class 100 for machine building

The ME versions of our small-scale controllers have been specifically developed for the requirements of machine building. For example, for addressing drives via step motor drivers or frequency converters.

The compact controllers offer all the functions of the ILC 1x1 and come with pre-installed functions for machine building. This means that various drive types can be controlled and sensors can be connected without any additional external modules.

Use analog input channels for position detection.

With Modbus/RTU and Easy Motion function block libraries, you can use the RS-485 and pulse/direction interface for positioning on simple 1-axis applications. The function block libraries are available to download free of charge.

Additional features:

– PWM/pulse/direction interface, RS-485
– 2 analog inputs
– 2 analog outputs

Notes:

You can find matching I/O modules for these controllers from page 100

For easy drive control

Ex:

Technical data

Interfaces		
INTERBUS local bus (master)		Inline data jumper
Ethernet		2 x RJ45 socket
RS-422/RS-485		1 x 4-pos. for full duplex
Parameterization/operation/diagnostics		1 x 6-pos. MINI DIN socket (PS/2)
INTERBUS master		
Number of devices with parameter channel		max. 24
Number of supported devices		max. 128
Amount of process data		max. 4096 Bit (INTERBUS) max. 32768 Bit (internal Modbus /TCP client)
Digital inputs/outputs		
Number of inputs		8
Number of outputs		4
Analog inputs/outputs		
Number of inputs		2
Number of outputs		2
IEC 61131 runtime system		
Programming tool		PC WORX PC WORX EXPRESS
Processor		Altera Nios II 64 MHz
Program memory		1 Mbyte
Mass storage		1 Mbyte
Retentive mass storage		48 kByte (NVRAM)
Number of data blocks		depends on mass storage
Number of timers, counters		depends on mass storage
Number of control tasks		8
Real-time clock		Yes
Power supply		
Supply voltage		24 V DC
Supply voltage range		19.2 V DC ... 30 V DC
Typical current consumption		310 mA
General data		
Dimensions	W / H / D	164 mm / 136.8 mm / 71.5 mm
Degree of protection		IP20
Ambient temperature (operation)		-25°C ... 55°C
EMC note		Class A product, see page 527

Ordering data

Description	Type	Order No.	Pcs./Pkt.
Compact controller, complete with accessories (connector and marking field) - Analog inputs/outputs	**ILC 191 ME/AN**	2700074	1

Accessories

Parameterization memory, Flash card without license			
- 2 GB	**SD FLASH 2GB**	2988162	1
- 512 MB	**SD FLASH 512MB**	2988146	1
- 2 GB	**SD FLASH 2GB APPLIC A**	2701190	1
- 512 MB	**SD FLASH 512MB APPLIC A**	2701799	1
Programming cable	**COM CAB MINI DIN**	2400127	1
AX OPC SERVER, communication interface for OPC-compatible visualization with PC Worx-based controllers - ILC 1x1, AXC 1xxx, ILC 3xx, AXC 3xxx, RFC 4xx, PC WORX RT BASIC/SRT	**AX OPC SERVER**	2985945	1

Class 100 for remote communication

These small-scale controllers offer all the functions of our 1x1 controllers.
In addition, they have an integrated mobile phone modem and more memory. This makes them the ideal solution for remote control and remote maintenance. The corresponding remote control software is: Resy+.

Additional features:

- Integrated GSM/GPRS modem, 16 digital inputs, 4 digital outputs
- Modbus/TCP (client and server) is integrated in the firmware – this increases performance and simplifies configuration
- SD card slot: for quick memory expansion and easy enabling of software blocks
- FTP server
- Flash file system
- Complete fieldbus master (4096 I/O points)
- Numerous protocols supported such as: HTTP, FTP, SNTP, SNMP, SMTP, SQL, MySQL, etc.
- Intuitive programming using PC Worx or using the free PC Worx Express software
- OPC functionality

Notes:

You can find matching I/O modules for these controllers from page 100

With integrated GSM/GPRS modem

Ex:

Technical data

Interfaces		
INTERBUS local bus (master)		Inline data jumper
Ethernet		1 x RJ45 socket
GSM / GPRS		SIM card, SMA antenna connection
INTERBUS master		
Number of devices with parameter channel		max. 16
Number of supported devices		max. 128
Amount of process data		max. 4096 Bit (INTERBUS)
Digital inputs/outputs		
Number of inputs		16
Number of outputs		4
IEC 61131 runtime system		
Programming tool		PC WORX PC WORX EXPRESS
Processor		Altera Nios II 64 MHz
Program memory		512 kByte
Mass storage		512 kByte
Retentive mass storage		48 kByte (NVRAM)
Number of data blocks		depends on mass storage
Number of timers, counters		depends on mass storage
Number of control tasks		8
Real-time clock		Yes
Power supply		
Supply voltage		24 V DC
Supply voltage range		19.2 V DC ... 30 V DC
Typical current consumption		210 mA
General data		
Dimensions	W / H / D	85 mm / 119.8 mm / 71.5 mm
Degree of protection		IP20
Ambient temperature (operation)		-25°C ... 55°C

Ordering data

Description	Type	Order No.	Pcs./Pkt.
Compact controller, complete with accessories (connector and marking field)	**ILC 151 GSM/GPRS**	2700977	1

Accessories

Description	Type	Order No.	Pcs./Pkt.
Multiband antenna for UMTS and quad band GSM, with omnidirectional characteristics - 2 m antenna cable	**PSI-GSM/UMTS-QB-ANT**	2313371	1
Parameterization memory, Flash card without license			
- 2 GB	**SD FLASH 2GB**	2988162	1
- 512 MB	**SD FLASH 512MB**	2988146	1
- 2 GB	**SD FLASH 2GB APPLIC A**	2701190	1
- 512 MB	**SD FLASH 512MB APPLIC A**	2701799	1
Programming cable	**COM CAB MINI DIN**	2400127	1
AX OPC SERVER, communication interface for OPC-compatible visualization with PC Worx-based controllers - ILC 1x1, AXC 1xxx, ILC 3xx, AXC 3xxx, RFC 4xx, PC WORX RT BASIC/SRT	**AX OPC SERVER**	2985945	1

Function modules — **See page 55**

Class 400

More memory, more speed, more power. The class 400 PROFINET-compatible controllers are the most powerful programmable logic controllers available from Phoenix Contact. Control demanding automation tasks with maximum performance and intelligent features.

Your advantages:
- Highly flexible, thanks to expansion with numerous I/O modules
- Communication in real time via PROFINET
- Optimum connection, with integrated web server and support for all common IT standards
- Maximum performance, thanks to high processor speed

Additional features:
- Control and fieldbus system status messages are easily read via the diagnostic display
- Thanks to the powerful processor, comprehensive automation tasks can be processed at maximum speed
- Integrated Ethernet interface
- Integrated web server for visualization with WebVisit
- FTP server
- Flash file system
- Numerous protocols supported such as: HTTP, FTP, SNTP, SNMP, SMTP, SQL, MySQL, etc.
- Integrated INTERBUS master
- Integrated PROFINET controller and PROFINET device
- Intuitive programming with PC Worx (IEC 61131−3)

The RFC 480S PN 4TX is equipped with an integrated **safety controller** for applications up to SIL 3. It supports the PROFIsafe protocol.

Uninterrupted processes are vital in complex systems and large plants. Ensure the continuous operation of your automation – with the **PROFINET redundancy controllers** from Phoenix Contact.

The high-performance PLCs establish a redundant system automatically, thanks to AutoSync technology.

Your advantages:
- Fast startup and automatic configuration of all redundancy functions, thanks to AutoSync technology
- Uninterrupted process in the event of failure or when a controller is replaced
- Optimum device integration, thanks to PROFINET standards; redundancy for your future-proof Ethernet network
- A distance of up to 80 km between the controllers via fiber optics; cost-optimized thanks to plug-in SFP modules
- High-resolution display for displaying status and error messages in plain text
- Uninterrupted visualization, thanks to redundancy-capable OPC server

Notes:

Further information on safety versions can be found in the “Functional safety” section on page 275

Interfaces	
INTERBUS (Master)	
Ethernet	
Parameterization/operation/diagnostics	
Synchronization interface	
USB 2.0	
INTERBUS master	
Number of devices with parameter channel	
Number of supported devices	
Amount of process data	
Digital inputs/outputs	
Connection method	
Number of inputs	
Number of outputs	
IEC 61131 runtime system	
Processor	
Program memory	
Mass storage	
Retentive mass storage	
Number of data blocks	
Number of timers, counters	
Number of control tasks	
Real-time clock	
Power supply	
Supply voltage	
Supply voltage range	
Typical current consumption	
General data	
Dimensions	W / H / D
Degree of protection	
Ambient temperature (operation)	
EMC note	

Description
Remote Field Controller - 3 x 10/100 Ethernet, PROFINET controller - 4 x 10/100/1000 Ethernet, PROFINET controller

Parameterization memory - 256 MB - 512 MB - 2 GB
Programming cable, for connecting the controller boards to the PC (RS-232-C), length: 3 m
USB memory stick, memory capacity 8 GB
RS-232 null modem adapter - 9-pos. female to 9-pos. male
Fan module for Remote Field Controller
AX OPC SERVER, communication interface for OPC-compatible visualization with PC Worx-based controllers - ILC 1x1, AXC 1xxx, ILC 3xx, AXC 3xxx, RFC 4xx, PC WORX RT BASIC/SRT

Remote Field Controller

With integrated safety controller

With redundancy function

Technical data	Technical data	Technical data
1 x D-SUB-9 female connector	-	-
2 x RJ45 socket	4 x RJ45 socket	3 x RJ45 socket
1 x D-SUB 9 plug	-	-
-	-	1 x SFP port
-	1 x USB type A, male connector	2 x USB type A, socket
max. 126	-	-
max. 512 (of which 254 are remote bus devices/bus segments)	max. 256	-
max. 8192 Bit (INTERBUS-Master)	-	-
14-pos. FLK pin strip	-	-
5	-	-
3	-	-
Intel® Celeron® 927 UE 1.5 GHz	Intel® Core™ i5-6300U 2x 2.4 GHz (Dual-Core)	Intel® Celeron® 927 UE 1.5 GHz
typ. 8 Mbyte	typ. 16 Mbyte	typ. 8 Mbyte
16 Mbyte	32 Mbyte	16 Mbyte
240 kByte (NVRAM)	2 Mbyte	120 kByte (NVRAM)
depends on mass storage	-	depends on mass storage
depends on mass storage	-	depends on mass storage
16	16	1
Integrated (battery backup)	Integrated (battery backup)	Integrated (battery backup)
24 V DC	24 V DC	24 V DC
19.2 V DC ... 30 V DC (including ripple)	19.2 V DC ... 30 V DC (including ripple)	19.2 V DC ... 30 V DC (including ripple)
1 A	1 A	1 A
124 mm / 185 mm / 190 mm	122 mm / 182 mm / 173 mm	124 mm / 185 mm / 190 mm
IP20	IP20	IP20
0°C ... 55°C (from 45°C only with fan module)	0°C ... 55°C (from 40°C only with fan module)	0°C ... 55°C (from 45°C only with fan module)
Class A product, see page 527	Class A product, see page 527	Class A product, see page 527

Ordering data

Type	Order No.	Pcs./Pkt.
RFC 470 PN 3TX	2916600	1

Ordering data

Type	Order No.	Pcs./Pkt.
RFC 480S PN 4TX	2404577	1

Ordering data

Type	Order No.	Pcs./Pkt.
RFC 460R PN 3TX	2700784	1

Accessories

CF FLASH 256MB	2988780	1
CF FLASH 2GB	2701185	1
IBS PRG CAB	2806862	1
USB FLASH DRIVE	2402809	1
PSM-AD-D9-NULLMODEM	2708753	1
RFC DUAL-FAN	2730239	1
AX OPC SERVER	2985945	1

Accessories

SD FLASH 512MB	2988146	1
SD FLASH 2GB	2988162	1
RFC FAN MODULE	2404085	1
AX OPC SERVER	2985945	1

Accessories

CF FLASH 256MB	2988780	1
CF FLASH 2GB	2701185	1
USB FLASH DRIVE	2402809	1
RFC DUAL-FAN	2730239	1
AX OPC SERVER	2985945	1

Software PLC for installation on IPCs

Industrial PCs for visualizing and operating processes are often only utilized to a limited extent. Make use of these available resources and also transform your industrial PC into a full-fledged PLC.

Depending on the performance requirements, choose between **PC Worx SRT** with statistically guaranteed response times for small to medium tasks and **PC Worx RT Basic** for complex automation with real-time requirements.

Your advantages:

- Stable and reliable, thanks to operating system expansion with PC Worx RT Basic
- Easy and inexpensive visualization, thanks to integrated web server
- Maximum Ethernet openness, as all common protocols are supported

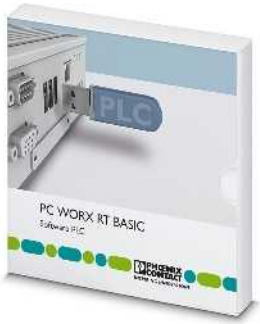

Software PLC with real-time extension

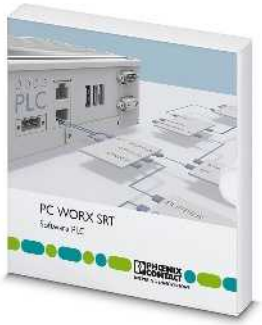

Software PLC without real-time extension

	Technical data	Technical data
Hardware requirements		
Processor	min. Intel® Core™2 Duo	min. Intel® Atom™
Main memory (RAM)	min. 2 GByte	min. 512 Mbyte
Hard disk memory	min. 1 GByte	min. 1 GByte
Interfaces	Ethernet port, USB port	Ethernet Port
Operating equipment	Keyboard, mouse recommended	Keyboard, mouse recommended
Monitor resolution	XGA (1024 x 768)	XGA (1024 x 768)
Software requirements		
Operating system	Windows® 7 (32-Bit/64-Bit) Windows® 8.1 (32-Bit/64-Bit) Windows® Embedded Standard 7 Windows® Embedded 2009 Windows® 10 (32-Bit/64-Bit)	Windows® 7 (32-Bit/64-Bit) Windows® 8.1 (32-Bit/64-Bit) Windows® Embedded Standard 7 Windows® Embedded 2009 Windows® 10 (32-Bit/64-Bit)
Supported browsers	Internet Explorer Version 8 or later	Internet Explorer Version 8 or later
Basic functions		
	Complete PLC PROFINET controller and device functionality only in conjunction with a Valueline PC INTERBUS functionality only in conjunction with an INTERBUS master controller board Integration of Modbus/TCP in the firmware	Complete PLC Non-real-time-capable software PLC for installation on a standard PC with integrated Modbus/TCP, plus PROFINET controller and device functionality
IEC 61131 runtime system		
Programmable under	PC WorX in IEC 61131	PC WorX in IEC 61131
Processing speed	0.001 ms (1 K mixed instructions, Intel® Core™2 Duo 1.5 GHz) 0.7 µs (1 K bit instructions, Intel® Core™2 Duo 1.5 GHz)	5.5 µs (1 K mixed instructions, Intel® Atom™ Z510PT) 4 µs (1 K bit instructions, Intel® Atom™ Z510PT)
Program memory	8 Mbyte	1 Mbyte
Mass storage	16 Mbyte	1 Mbyte
Retentive mass storage	240 kByte	48 kByte
Number of data blocks	depends on mass storage	depends on mass storage
Number of timers, counters	depends on mass storage	depends on mass storage
Number of control tasks	16	8

	Ordering data			Ordering data		
Description	Type	Order No.	Pcs./Pkt.	Type	Order No.	Pcs./Pkt.
Software PLC	**PC WORX RT BASIC**	2700291	1	**PC WORX SRT**	2701680	1
	Accessories			**Accessories**		
PC controller board	**IBS PCI SC/I-T**	2725260	1			
AX OPC SERVER, communication interface for OPC-compatible visualization with PC Worx-based controllers	**AX OPC SERVER**	2985945	1	**AX OPC SERVER**	2985945	1
Industrial PC	**See page 474 onwards**			**See page 474 onwards**		

Function blocks/libraries

Programmable logic controllers from Phoenix Contact can be adapted to any requirement quickly and easily using SD cards and function blocks. This means that you can install parameterization memories, licenses for function block libraries or fully tested applications at a later time, without the need for additional hardware.

Industry-specific function blocks are tailored to the individual requirements of a particular industry and offer considerable advantages when it comes to engineering.

Extend your system quickly and easily with the following functions:
– IEC 61850 communication
– Integration of SafetyBridge I/O modules
– Energy measurement
– Multiplexer function
– webMI functionality of atvise®
– Control technology
– Network protocols
– IT security
– Network management
– Databases
– CAN bus
– Motor management
– Remote control protocols (Resy+)

Your advantages:
– Individual expansion of the controller solution with complete and tested applications
– Activation of libraries and function blocks via license keys
– Uncomplicated device replacement by transferring the data via SD card

If the card is marked with the **APPLIC A** suffix, it contains a corresponding license for activating further function block libraries.

These function block libraries can be downloaded from our website.

i Your web code: #1390

SD memory card with function block license

Description	Ordering data: Type	Order No.	Pcs./Pkt.
Program and configuration memory, Flash card with license key for IEC 61850 communication			
- 2 GB	SD FLASH 2GB 61850	2400435	1
- 2 GB, with license key for activating further function block libraries	SD FLASH 2GB APPLIC A 61850	2400436	1
Program and configuration memory, Flash card with license key and user program for easy web-based configuration and startup of a SafetyBridge solution			
- 2 GB, for Inline	SD FLASH 2GB EASY SAFE BASIC	2403297	1
- 2 GB, for Inline including communication via Modbus/TCP, PROFINET, and e-mail	SD FLASH 2GB EASY SAFE PRO	2403298	1
- 2 GB, for Axioline including communication via Modbus/TCP, PROFINET, and e-mail	SD FLASH 2GB AXC EASY SAFE PRO	2403730	1
Program and configuration memory, plug-in, 2 GB with license key and user program for reading from measuring devices	SD FLASH 2GB EMLOG	2403484	1
Program and configuration memory, Flash card with license key for multiplexer applications. For configuring two ILC 131 ETH devices as multiplexers			
- 512 MB	SD FLASH 512MB MODULAR MUX	2701872	1
Program and configuration memory, Flash card for using the webMI functionality of atvise®			
- 2 GB	SD FLASH 2GB ATVISE	2400088	1
- 2 GB, with license key for activating further function block libraries	SD FLASH 2GB APPLIC A ATVISE	2400089	1
Program and configuration memory, Flash card with license key for controller function blocks with self-optimization for temperature control			
- 512 MB	SD FLASH 512MB PDPI BASIC	2701800	1
- 256 MB	CF FLASH 256MB PDPI BASIC	2700549	1
- 512 MB, extended with functions for process automation	SD FLASH 512MB PDPI PRO	2701801	1
- 256 MB, extended with functions for process automation	CF FLASH 256MB PDPI PRO	2700550	1
Program and configuration memory, Flash card with license key for function block libraries such as SNMP, SQL, wireless, and motion functions, remote control protocols (Resy+), etc.			
- 2 GB	SD FLASH 2GB APPLIC A	2701190	1
- 2 GB	CF FLASH 2GB APPLIC A	2701189	1
- 512 MB	SD FLASH 512MB APPLIC A	2701799	1
- 256 MB	CF FLASH 256MB APPLIC A	2988793	1

Starter kit for automation with small-scale controllers – PROFINET

The PROFINET starter kit provides a cost-effective introduction that enables you to discover the advantages of PROFINET technology. Here, an automation station consisting of an Axiocontrol PLC and Axioline F I/O system is used to integrate the latest robust components. This allows you to build your own test and learning application.

Your advantages:

- Fast introduction to automation with PROFINET, thanks to step-by-step instructions for the test structure
- Structure with the latest automation station based on Axiocontrol and Axioline components
- Get started straight away with a set of all the necessary products

Test setup for a fast introduction to PROFINET automation

Technical data

See AXC 1050 on page 44

Ordering data

Description	Type	Order No.	Pcs./Pkt.
PROFINET starter kit, incl. AXC 1050 controller, bus coupler, I/O modules, power supply, and cables as well as PC Worx software with quick start guide and application example	**AXC 1050 PN STARTERKIT**	**2400361**	1

Starter kit for automation with small-scale controllers – INTERBUS

The ILC 131 starter kit provides an easy introduction to our controllers. Learn about control technology with the aid of a pre-assembled test structure with programmed examples. Then use the PC Worx Express programming software to create custom solutions.

Begin by starting up the controller, configure it, and parameterize the bus structure. With the test structure, enter the world of IEC 61131−3-compliant programming.

Controller performance data at a glance:

– Supply voltage: 24 V DC
– Integrated inputs /outputs: 8 / 4
– Processing time per 1000 instructions: 90 µs (bit data types), 1.7 ms (mixed data types)
– Program / mass storage: 192 kB / 192 kB
– Retentive mass storage: 8 kB

Ethernet

Test setup for a fast introduction to INTERBUS automation

EAC

Technical data

See ILC 131 ETH on page 48

Ordering data

Description	Type	Order No.	Pcs./Pkt.
ILC 131 starter kit, incl. ILC 131 ETH, analog input module, control panel, power supply unit, plus accessories and cables with test application set up	ILC 131 STARTERKIT	2701835	1

Accessories

Description	Type	Order No.	Pcs./Pkt.
Programming cable	COM CAB MINI DIN	2400127	1
AX OPC SERVER, communication interface for OPC-compatible visualization with PC Worx-based controllers - ILC 1x1, AXC 1xxx, ILC 3xx, AXC 3xxx, RFC 4xx, PC WORX RT BASIC/SRT	AX OPC SERVER	2985945	1

Programmable logic relay system – PLC logic

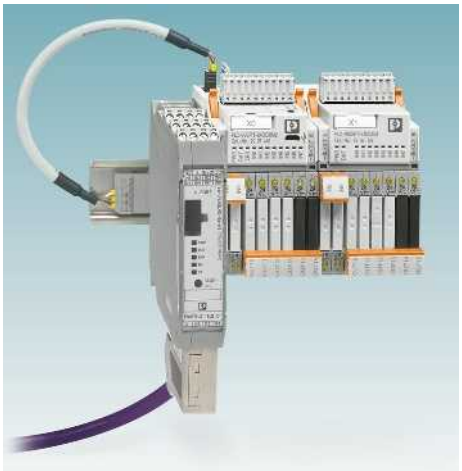

Stand-alone module

The PLC logic programmable logic relay system combines logic, interface, and field connection levels in a single unit. It processes digital and analog input signals as well as logic functions and timer modules. With the PLC logic logic relay system you can implement small automation tasks easily, flexibly, and in a way that is highly compact. You can therefore replace conventional switching and control devices.

The system consists of the PLC-V8C logic modules, the PLC-INTERFACE relay system, and the Logic+ software.

Up to 16 I/O signals can be processed using the stand-alone logic modules on an overall width of just 50 mm. If more I/O signals are required, a maximum of 48 I/O signals can be linked using the basic and extension modules.

The logic modules are simply plugged into a row of eight PLC-INTERFACE terminal blocks. Assemble each channel individually as an input or output with relay or analog modules, depending on the application requirements.

Additional information:

The complete product range for the PLC logic programmable logic relay system can be found in our Catalog 5 – Interface technology and switching devices.

Find out more with the web code

Detailed information on these products can be found on our website. Simply enter # and numbers in the search field.

i #0687

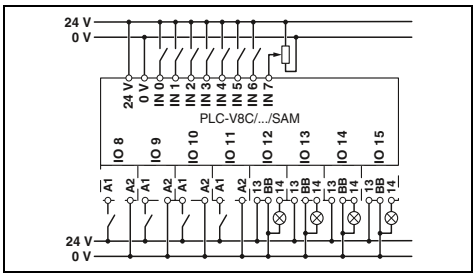

Technical data

Supply	
Supply voltage	24 V DC
Supply voltage range	19.2 V DC ... 26.4 V DC
Maximum input current at U_N	160 mA
Input data (digital)	
Number of inputs	8 (2 configurable as analog)
Input voltage	24 V DC
Description of the input	EN 61131-2, type 3
Input current 0-signal	< 1 mA
Input current 1-signal	typ. 2.5 mA
Input data (analog)	
Number of inputs	2 (IN6 and IN7 are configurable as analog)
Input voltage range	0 V ... 10 V
Input resistance	> 3.5 kΩ
Input data (PLC-INTERFACE)	
Number of inputs	≤ 8
Output data (for controlling PLC-INTERFACE)	
Number of outputs	≤ 8
Nominal voltage	24 V DC
Nominal current	9 mA
Real-time clock (basic module only)	
Buffer time (capacitor)	96 h (capacitor)
Real-time clock accuracy	±2 s/d
General data	
Ambient temperature (operation)	-20°C ... 50°C
Ambient temperature (storage/transport)	-20°C ... 70°C
Permissible humidity (operation)	95%
Air clearances and creepage distances between the power circuits	DIN EN 50178
Rated insulation voltage	50 V
Rated surge voltage	0.8 kV
Insulation	Basic insulation
Mounting type	can be plugged onto 8 x PLC-INTERFACE terminal blocks
Degree of protection	IP20
Push-in connection rigid / flexible / AWG	0.14 - 1.5 mm² / 0.14 - 1.5 mm² / 26 - 16

Ordering data

Description	Type	Order No.	Pcs./Pkt.
PLC-V8C plug-in logic modules			
with Push-in connection	**PLC-V8C/PT-24DC/SAM2**	2907443	1

Basic module
(can be extended)

Extension module

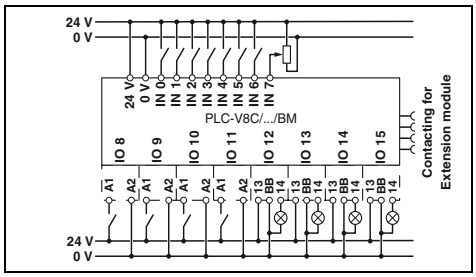

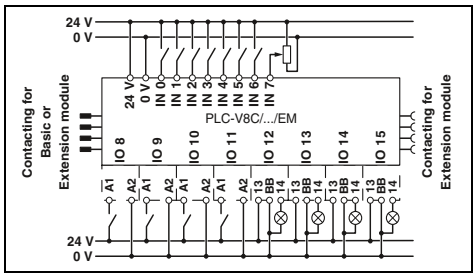

Technical data

24 V DC
19.2 V DC ... 26.4 V DC
160 mA
8 (2 configurable as analog)
24 V DC
EN 61131-2, type 3
< 1 mA
typ. 2.5 mA
2 (IN6 and IN7 are configurable as analog)
0 V ... 10 V
> 3.5 kΩ
≤ 8
≤ 8
24 V DC
9 mA
96 h (capacitor)
±2 s/d
-20°C ... 50°C
-20°C ... 70°C
95%
DIN EN 50178
50 V
0.8 kV
Basic insulation
can be plugged onto 8 x PLC-INTERFACE terminal blocks
IP20
0.14 - 1.5 mm² / 0.14 - 1.5 mm² / 26 - 16

Ordering data

Type	Order No.	Pcs./Pkt.
PLC-V8C/PT-24DC/BM2	2907446	1

Technical data

24 V DC
19.2 V DC ... 26.4 V DC
65 mA
8 (2 configurable as analog)
24 V DC
EN 61131-2, type 3
< 1 mA
typ. 2.5 mA
2 (IN6 and IN7 are configurable as analog)
0 V ... 10 V
> 3.5 kΩ
≤ 8
≤ 8
24 V DC
9 mA
-
-
-20°C ... 45°C
-20°C ... 70°C
95%
DIN EN 50178
50 V
0.8 kV
Basic insulation
can be plugged onto 8 x PLC-INTERFACE terminal blocks
IP20
0.14 - 1.5 mm² / 0.14 - 1.5 mm² / 26 - 16

Ordering data

Type	Order No.	Pcs./Pkt.
PLC-V8C/PT-24DC/EM	2905137	1

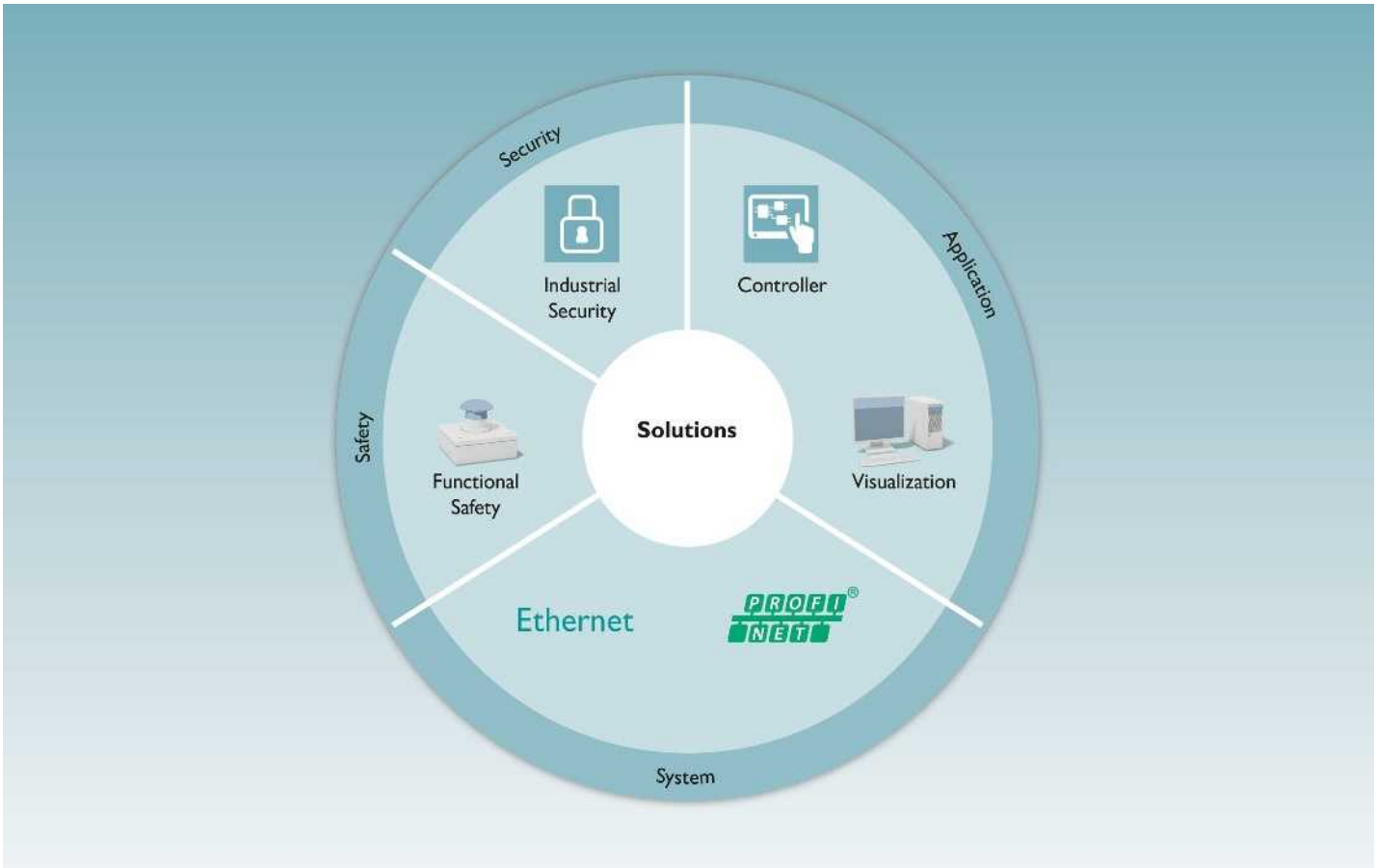

Whatever your automation task: our specialists in the AUTOMATIONWORX Competence Center are available to answer any questions you may have. This is made possible by our flexible service concept.

Based on the typical phases of a project, we work with you at each stage. With our expertise and years of experience we provide support that is tailored to your industry and the specific phase of your project.

Your advantages:
- Save time by transferring automation tasks to Phoenix Contact
- Optimum automation solution, thanks to comprehensive technology and product expertise
- Sophisticated process management, thanks to the consistent consideration of all requirements
- Target-oriented project management with optimally coordinated process steps
- Traceable, legal protection, thanks to consistent documentation

Services for functional safety can be found on page 282.

Service

You can rely on our support for the smooth operation of your application. Our experts deal with queries encountered in practical applications every day. They draw on their experience of all sectors and knowledge of the components and technologies used.

Our service specialists will be happy to support you with the following services:
– Hotline
– On-site service
– Startup support
– Professional workshops

If queries arise during startup and operation, in addition to your local specialists you can also contact our free 24-hour hotline at any time:
+49 5281 946-2888
Or send us an e-mail:
automation-service@phoenixcontact.com

We will be happy to answer general questions regarding the functionality of individual components or the system.
If this is not sufficient, our startup support team and on-site service will be there to provide assistance.

Training

Discover the added value our individual training concepts and training services offer.

With our tailor-made concepts, we help you and your employees to make optimum use of the control and I/O systems from Phoenix Contact.

With our free consultation service, we can work together to arrange the contents, duration, location, and date of your individual training session.

Should you have any queries regarding our training services and qualification concepts, please contact your local contact person or contact our Back Office Training team directly:
+49 5281 946-2161
Or send us an e-mail:
automation-training@phoenixcontact.com

We will happily advise you on the implementation of your qualification requirements and work with you to create your own individual training program.

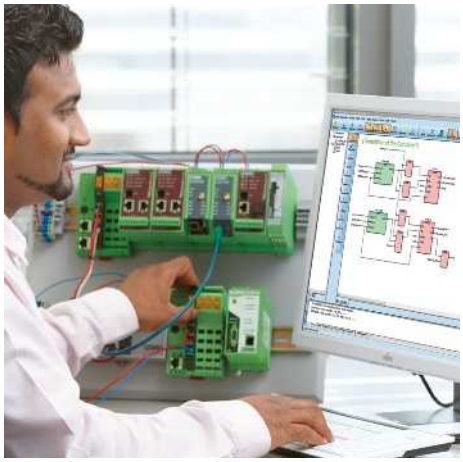

Engineering

Whatever your automation task: our engineering specialists are available to answer any questions you may have. Based on the typical phases of a project, we work with you at each stage.

With our expertise and years of experience we provide support that is tailored to your industry and the specific phase of your project.

Simply give us an outline of the applications you would like to implement and we will provide you with a technical concept that includes suitable hardware and software.
– Configuration
– Programming
– Visualization
– Coaching

a 0 1 2 3 4 5 6 7
PHOENIX CONTACT
LPSDO8/3
2702171
BK EC
S1
S2

DIO16
ETH 1
ETH 2
X21
X22
PWR IN
PWR OUT
X31
X32
PHOENIX CONTACT
X01
X02
X03
X04
X05
X06
X07
X08

I/O systems

I/O systems from Phoenix Contact are the perfect solution for control cabinet engineering or field installation.

I/O systems for the control cabinet

Axioline F
Axioline F is fast, robust, and easy. Open to all Ethernet-based communication protocols and PROFIBUS, Axioline F enables the shortest response times, fast installation, and is characterized by its particularly robust design and easy handling.

Axioline P
The Axioline P modular proxy can be used to connect PROFIBUS PA segments directly to a PROFINET network. Various redundancy mechanisms ensure high failsafe performance and process reliability.

Inline
Inline, our I/O automation kit, can be used to connect sensors and actuators with a maximum range of functions.
These I/Os can also be found in safety applications or potentially explosive areas.

Stand-alone IO-Link masters
The stand-alone IO-Link masters for the control cabinet are used to easily and conveniently integrate IO-Link devices into higher-level networks.

I/O systems for field installation

Axioline E
The I/O system features a fast response time, robust design, and easy handling.
The comprehensive portfolio with optional plastic or zinc die-cast housing enables use in a wide range of environments.

Fieldline Modular
The devices in the Fieldline Modular product range with IP65/IP67 protection are optimized for use in machine building and systems manufacturing directly in the field.

Product overview 64

For the control cabinet (IP20)

Axioline F
Product overview 66
I/O modules 68

Axioline P
Product overview 97
I/O devices 98

Inline
Product overview 100
I/O terminals 103

Stand-alone IO-Link masters 162

Inline Block IO
Product overview 164

INTERBUS Smart Terminals
Product overview 165

For field installation (IP65/IP67)

Axioline E
Product overview 166
I/O devices 168

Fieldline Modular
Product overview 186
I/O devices 188

AS-Interface
Product overview 202

Ruggedline
Product overview 203

I/O systems for the control cabinet (IP20)

Axioline F
Page 66

Axioline P
Page 97

Inline
Page 100

Stand-alone IO-Link masters
Page 162

Inline Block IO
Page 164

INTERBUS ST
Page 165

I/O systems for field installation (IP65/IP67)

Axioline E – Devices in plastic and metal version
Page 166

Fieldline Modular
Page 186

AS-Interface
Page 202

Ruggedline
Page 203

PLCnext Control

PLCnext Control AXC F 2152 – Controller for PLCnext Technology
Page 10

Conventional PLCs and small-scale controllers

Axiocontrol and Inline controllers
Page 41

Functional safety

Safe I/Os
Page 265

Industrial Wireless

Wireless multiplexer with antennas
Page 386

Sensor/actuator cabling

• See Catalog 2 –
Corresponding cabling for I/O systems

Your web code: #0564

Marking and labeling

• See Catalog 3 –
Marking and labeling section

Your web code: #0575

Software for device parameterization

Startup+ – Software for wiring checks on Axioline F I/O stations

Your web code: #1164

IOL-CONF – Software for parameterizing IO-Link devices

Your web code: #1164

Software for planning and configuration

Project+ – Software for planning the I/O configuration

Your web code: #1161

COMPLETE line

The comprehensive solution for
your control cabinet:
Easy planning, intuitive installation

Page 522

For the control cabinet (IP20) – Axioline F

Product overview

Bus couplers						
PROFINET	EtherCAT	EtherNet/IP	sercos the automation bus	Modbus/TCP (UDP)	Ethernet IEC 61850	PROFIBUS
69	68	71	69	71	71	72

Axiocontrol	
PLCnext Control	Conventional PLCs
10	44

Power module
Power module
73

Input and output modules		
Digital input	Digital output	Digital input and output
8 - 64 channels	4 - 64 channels	8 - 16 channels
74	76	80
Analog input	Analog output	Analog input and output
4 - 8 channels	4 - 8 channels	2 channels
82	85	84
Temperature measurement		
RTD / UTH		
86		

Function modules			
Communication	Power measurement	PWM / counter	Position detection
RS-485/422/232 IO-Link			
88	91	92	93

Safe I/Os	
SafetyBridge Technology	PROFIsafe
269	270

General accessories

ZB 20,3 AXL UNPRINTED

Zack marker strip, for device marking, unprinted

ZBF 10/5,8 AXL UNPRINTED

Zack marker strip, flat, for connector and slot marking, unprinted

EMT (35x...)R

Marking label rolls, unprinted

AXL SHIELD SET

Shield connection set

AXL BS BK

Bus base module for bus couplers

AXL F BS H

Bus base module for housing type H

AXL F BS F

Bus base module for housing type F

phoenixcontact.net/products

General technical data

Ambient conditions	
Temperature range (operation) - Extended (...-XC modules) Relative humidity (operation/storage/transport) Vibration Shock Continuous shock Degree of protection	-25°C ... +60°C -40°C ... +70°C 5% to 95% (non-condensing) 5g in accordance with EN 60068-2-6 / IEC 60068-2-6 30g in accordance with EN 60068-2-27 / IEC 60068-2-27 10g in accordance with EN 60068-2-27 / IEC 60068-2-27 IP20

Electromagnetic compatibility	
Noise emission Noise immunity	Class B in accordance with EN 61000-6-3 In accordance with EN 61000-6-2

System times	
System bus cycle time Offset per module	2 µs 1 µs

Housing types and dimensions

Bus couplers

RJ45 connection

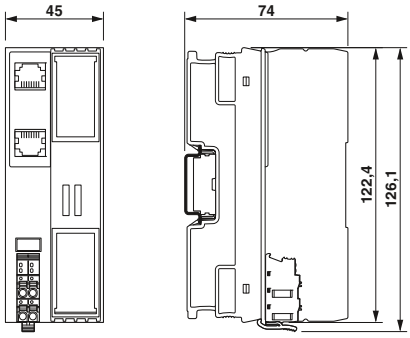

I/O modules

Housing type 1F

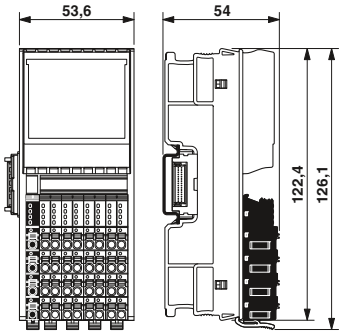

Housing type 2F

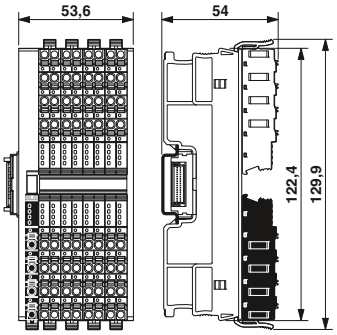

Housing type 1H

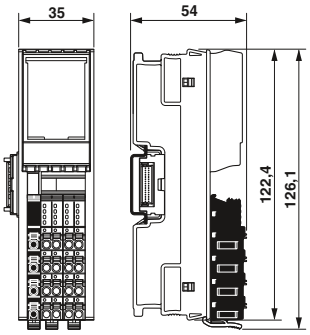

Housing type 2H

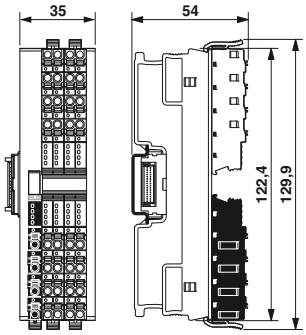

Bus couplers

The Axioline F bus couplers are the link between the Axioline F system and the higher-level network.

For startup tests, the Axioline F station can be started up independently of the higher-level network via either an Ethernet port or the local service interface on the bus coupler using the Startup+ software.

EtherCAT® features:
- Minimum cycle time of EtherCAT® is 50 µs
- Supported mailbox protocols CoE, FoE
- Automatic and manual addressing

Sercos® features:
- Sercos specification V1.3
- Minimum Sercos cycle time of 31.25 µs

PROFINET features:
- PROFINET RT and PROFINET in accordance with the latest PROFINET specification
- MRP implemented
- Web-based management

RJ45 connection

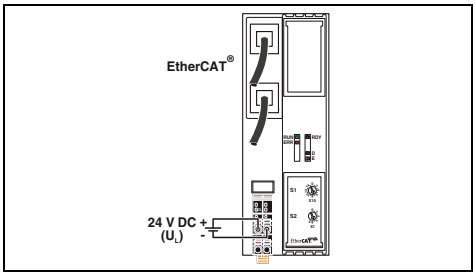

Technical data

Interface		
Fieldbus system		EtherCAT®
Connection method		RJ45 socket
Number		2
Transmission speed		100 Mbps (full duplex)
Transmission distance		max. 100 m
Protocols supported		CoE, FoE
Service interface		
Connection method		Micro USB type B
Local bus interface		
Designation		Axioline F local bus
Connection method		Bus base module
Transmission speed		100 Mbps
Number of supported devices		max. 63 (per station)
Power supply for module electronics		
Supply of communications power U_L		24 V DC
Maximum permissible voltage range		19.2 V DC ... 30 V DC (including all tolerances, including ripple)
Communications power U_{Bus}		5 V DC (via bus base module)
Current supply at U_{Bus}		2 A
Protective circuit		Surge protection of the supply voltage Polarity reversal protection of the supply voltage
General data		
Connection method		Push-in connection
Connection data rigid / flexible / AWG		0.2 ... 1.5 mm² / 0.2 ... 1.5 mm² / 24 - 16
Weight		177 g
Dimensions	W / H / D	45 mm / 126.1 mm / 74 mm
EMC note		

Ordering data

Description	Type	Order No.	Pcs./Pkt.
Axioline F bus coupler - For EtherCAT® - For Sercos - For PROFINET (specification 2.3) - For PROFINET (specification 2.2)	**AXL F BK EC**	2688899	1

Accessories

Axioline F bus base module (replacement part)	**AXL BS BK**	2701422	5

sercos
the automation bus

RJ45 connection

RJ45 connection

RJ45 connection

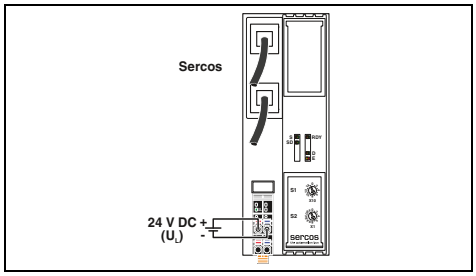

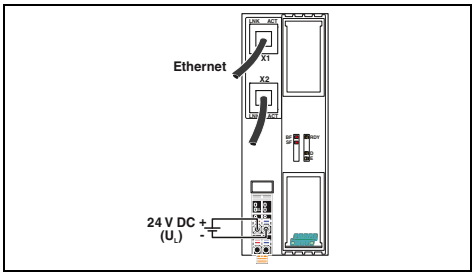

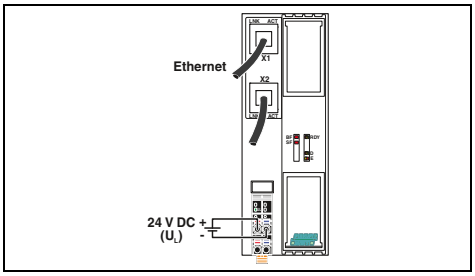

Technical data

Sercos RJ45 socket 2 100 Mbps (full duplex) max. 100 m Sercos, TFTP	
Micro USB type B	
Axioline F local bus Bus base module 100 Mbps max. 63 (per station)	
24 V DC 19.2 V DC ... 30 V DC (including all tolerances, including ripple) 5 V DC (via bus base module) 2 A Surge protection of the supply voltage Polarity reversal protection of the supply voltage	
Push-in connection 0.2 ... 1.5 mm² / 0.2 ... 1.5 mm² / 24 - 16 177 g 45 mm / 126.1 mm / 74 mm	

Ordering data

Type	Order No.	Pcs./Pkt.
AXL F BK S3	2701686	1

Accessories

AXL BS BK	2701422	5

Technical data

PROFINET RJ45 socket 2 100 Mbps (full duplex) max. 100 m PROFINET, TFTP, PTCP, LLDP, SNMP, MRP, DDI, BootP (BootP only for the implementation of firmware updates)	
USB type C	
Axioline F local bus Bus base module 100 Mbps max. 63 (per station)	
24 V DC 19.2 V DC ... 30 V DC (including all tolerances, including ripple) 5 V DC (via bus base module) 2 A Surge protection of the supply voltage Polarity reversal protection of the supply voltage	
Push-in connection 0.2 ... 1.5 mm² / 0.2 ... 1.5 mm² / 24 - 16 177 g 45 mm / 126.1 mm / 74 mm Class A product, see page 527	

Ordering data

Type	Order No.	Pcs./Pkt.
AXL F BK PN TPS	2403869	1

Accessories

AXL BS BK	2701422	5

Technical data

PROFINET RJ45 socket 2 100 Mbps (full duplex) max. 100 m PROFINET, TFTP, PTCP, LLDP, SNMP, MRP, DDI, BootP (BootP only for the implementation of firmware updates)	
Micro USB type B	
Axioline F local bus Bus base module 100 Mbps max. 63 (per station)	
24 V DC 19.2 V DC ... 30 V DC (including all tolerances, including ripple) 5 V DC (via bus base module) 2 A Surge protection of the supply voltage Polarity reversal protection of the supply voltage	
Push-in connection 0.2 ... 1.5 mm² / 0.2 ... 1.5 mm² / 24 - 16 177 g 45 mm / 126.1 mm / 74 mm	

Ordering data

Type	Order No.	Pcs./Pkt.
AXL F BK PN	2701815	1

Accessories

AXL BS BK	2701422	5

Bus couplers

The Axioline F bus couplers are the link between the Axioline F system and the higher-level network.

For startup tests, the Axioline F station can be started up independently of the higher-level network via either an Ethernet port or the local service interface on the bus coupler using the Startup+ software.

EtherNet/IP™ features:

– ACD (Address Conflict Detection) implemented
– RPI (Request Packet Interval) of 5 µs
– Device Level Ring (DLR) (for AXL F BK EIP EF)

Modbus/TCP (UDP) features:

– Two rotary encoding switches for address assignment
– One or two MAC addresses
– Software interfaces for access via TCP/IP:
  - Device Driver Interface (DDI)
  - High-Level Language Fieldbus Interface (HFI)

SAS features (IEC 61850):

– Communication in accordance with IEC 61850-5, MMS, and GOOSE
– Time synchronization via SNTP
– Web server

RJ45 connection

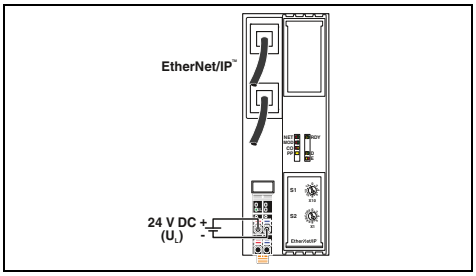

Technical data

		AXL F BK EIP	AXL F BK EIP EF
Interface			
Fieldbus system		EtherNet/IP™	
Connection method		RJ45 socket	
Number		2	
Transmission speed		10/100 Mbps (half or full duplex mode (automatic detection, can be adjusted manually))	
Transmission distance		max. 100 m	
Protocols supported		EtherNet/IP™, SNMP, HTTP, BootP, DHCP, FTP, TFTP	EtherNet/IP™, SNMP, DLR, HTTP, BootP, DHCP, FTP, TFTP
Service interface			
Connection method		Micro USB type B	
Local bus interface			
Designation		Axioline F local bus	
Connection method		Bus base module	
Transmission speed		100 Mbps	
Number of supported devices		max. 63 (per station)	
Power supply for module electronics			
Supply of communications power U_L		24 V DC	
Maximum permissible voltage range		19.2 V DC ... 30 V DC (including all tolerances, including ripple)	
Communications power U_{Bus}		5 V DC (via bus base module)	
Current supply at U_{Bus}		2 A	
Protective circuit		Surge protection of the supply voltage Polarity reversal protection of the supply voltage	
General data			
Connection method		Push-in connection	
Connection data rigid / flexible / AWG		0.2 ... 1.5 mm² / 0.2 ... 1.5 mm² / 24 - 16	
Weight		177 g	
Dimensions	W / H / D	45 mm / 126.1 mm / 74 mm	

Ordering data

Description	Type	Order No.	Pcs./Pkt.
Axioline F bus coupler - For EtherNet/IP™ - For EtherNet/IP™, extended functions - For Ethernet (Modbus/TCP) - For Ethernet (IEC 61850) - For extended temperature range of -40°C ... +70°C	**AXL F BK EIP** **AXL F BK EIP EF**	2688394 2702782	1 1

Accessories

Axioline F bus base module (replacement part)	**AXL BS BK**	2701422	5

Modbus/TCP (UDP)

RJ45 connection

Modbus/TCP (UDP)

RJ45 connection,
two separate Ethernet ports

Ethernet

IEC 61850

RJ45 connection

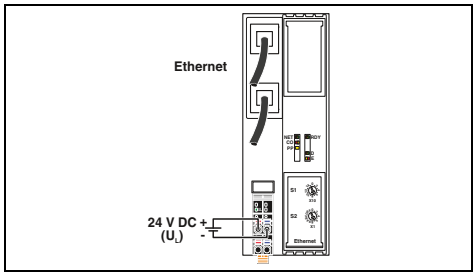

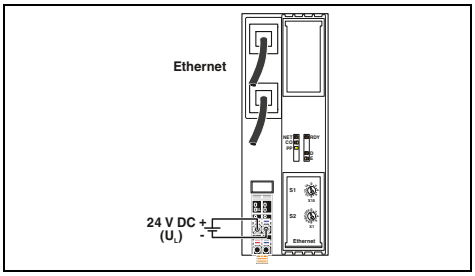

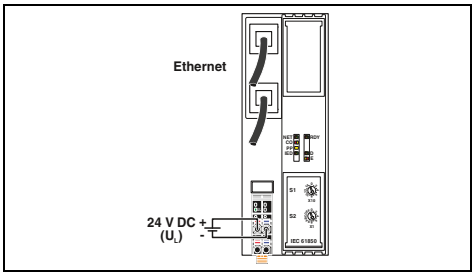

Technical data

Modbus/TCP (UDP) RJ45 socket 2 10/100 Mbps (half or full duplex mode (automatic detection, can be adjusted manually))	Ethernet (2 networks) RJ45 socket 2 10/100 Mbps (half or full duplex mode (automatic detection, can be adjusted manually))	Ethernet (IEC 61850, MMS, GOOSE) RJ45 socket 2 100 Mbps (full duplex)
max. 100 m Modbus/TCP (UDP), SNMP, HTTP, BootP, DHCP, FTP, TFTP	max. 100 m Modbus/TCP (UDP), SNMP, HTTP, BootP, DHCP, FTP, TFTP	max. 100 m MMS, GOOSE, SNMP, HTTP, BootP, DHCP, FTP, TFTP, SNTP
Micro USB type B	Micro USB type B	Micro USB type B
Axioline F local bus Bus base module 100 Mbps max. 63 (per station)	Axioline F local bus Bus base module 100 Mbps max. 63 (per station)	Axioline F local bus Bus base module 100 Mbps max. 63 (per station)
24 V DC 19.2 V DC ... 30 V DC (including all tolerances, including ripple) 5 V DC (via bus base module) 2 A Surge protection of the supply voltage Polarity reversal protection of the supply voltage	24 V DC 19.2 V DC ... 30 V DC (including all tolerances, including ripple) 5 V DC (via bus base module) 2 A Surge protection of the supply voltage Polarity reversal protection of the supply voltage	24 V DC 19.2 V DC ... 30 V DC (including all tolerances, including ripple) 5 V DC (via bus base module) 2 A Surge protection of the supply voltage Polarity reversal protection of the supply voltage
Push-in connection 0.2 ... 1.5 mm^2 / 0.2 ... 1.5 mm^2 / 24 - 16 177 g 45 mm / 126.1 mm / 74 mm	Push-in connection 0.2 ... 1.5 mm^2 / 0.2 ... 1.5 mm^2 / 24 - 16 177 g 45 mm / 126.1 mm / 74 mm	Push-in connection 0.2 ... 1.5 mm^2 / 0.2 ... 1.5 mm^2 / 24 - 16 177 g 45 mm / 126.1 mm / 74 mm

Ordering data

Type	Order No.	Pcs./Pkt.
AXL F BK ETH	2688459	1
AXL F BK ETH XC	2701949	1

Accessories

AXL BS BK	2701422	5

Ordering data

Type	Order No.	Pcs./Pkt.
AXL F BK ETH NET2	2702177	1

Accessories

AXL BS BK	2701422	5

Ordering data

Type	Order No.	Pcs./Pkt.
AXL F BK SAS	2701457	1

Accessories

AXL BS BK	2701422	5

Bus couplers

The Axioline F bus couplers are the link between the Axioline F system and the higher-level network.

For startup tests, the Axioline F station can be started up independently of the higher-level network via either an Ethernet port or the local service interface on the bus coupler using the Startup+ software.

Features:

– I&M functions
– Operation of PROFIsafe devices

D-SUB connection

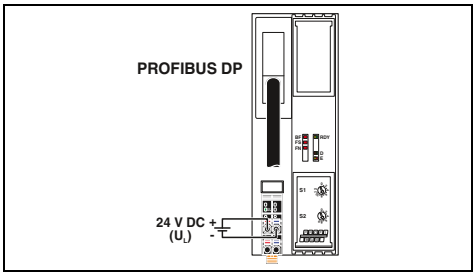

Technical data

Interface	
Fieldbus system	PROFIBUS DP
Connection method	D-SUB-9 female connector
Number	1
Transmission speed	9.6 kbps ... 12 Mbps
Service interface	
Connection method	Micro USB type B
Local bus interface	
Designation	Axioline F local bus
Connection method	Bus base module
Transmission speed	100 Mbps
Number of supported devices	max. 63 (per station)
Power supply for module electronics	
Supply of communications power U_L	24 V DC
Maximum permissible voltage range	19.2 V DC ... 30 V DC (including all tolerances, including ripple)
Communications power U_{Bus}	5 V DC (via bus base module)
Current supply at U_{Bus}	2 A
Protective circuit	Surge protection of the supply voltage Polarity reversal protection of the supply voltage
General data	
Connection method	Push-in connection
Connection data rigid / flexible / AWG	0.2 ... 1.5 mm² / 0.2 ... 1.5 mm² / 24 - 16
Weight	175 g
Dimensions W / H / D	45 mm / 125.9 mm / 74 mm

Ordering data

Description	Type	Order No.	Pcs./Pkt.
Axioline F bus coupler			
- For PROFIBUS	**AXL F BK PB**	2688530	1
- For extended temperature range of -40°C ... +70°C	**AXL F BK PB XC**	2702463	1

Accessories

Axioline F bus base module (replacement part)	**AXL BS BK**	2701422	5

Power module

This module is designed for use within an Axioline F station.

Once the maximum load on a bus coupler has been reached for the Axioline F local bus supply, you can resupply the U_{Bus} communications power with the power module.

For supplying the U_{Bus} communications power

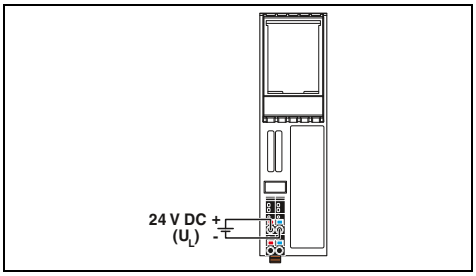

Technical data

Local bus interface		
Designation		Axioline F local bus
Connection method		Bus base module
Power supply for module electronics		
Supply of communications power U_L		24 V DC
Maximum permissible voltage range		19.2 V DC ... 30 V DC (including all tolerances, including ripple)
Communications power U_{Bus}		5 V DC (via bus base module)
Current supply at U_{Bus}		max. 4 A
Protective circuit		Surge protection of the supply voltage Polarity reversal protection of the supply voltage
General data		
Connection method		Push-in connection
Connection data rigid / flexible / AWG		0.2 ... 1.5 mm^2 / 0.2 ... 1.5 mm^2 / 24 - 16
Weight		107 g
Dimensions	W / H / D	35 mm / 126.1 mm / 54 mm
EMC note		Class A product, see page 527

Ordering data

Description	Type	Order No.	Pcs./Pkt.
Axioline F power module, complete with accessories (bus base module)	**AXL F PWR 1H**	2688297	1

Digital input modules

These modules are designed for use within an Axioline F station.

The digital input modules are used to connect 24 V DC sensors. Sensors with up to 4-conductor connection technology can be connected.

Features:

- Minimum update time of < 100 µs
- Adjustable filter times
- Maximum input frequency: 5 kHz
- Stored device rating plate
- Diagnostic and status indicators

AXL DI 8/2... features:

- Impulse withstand voltage: 5 kV
- Developed in accordance with the requirements of IEC 61850-3

AXL DI 16/1 HS 1H features:

- Minimum update time of 5 µs

IEC 61850-3

8 inputs,
with increased impulse withstand voltage

16 inputs

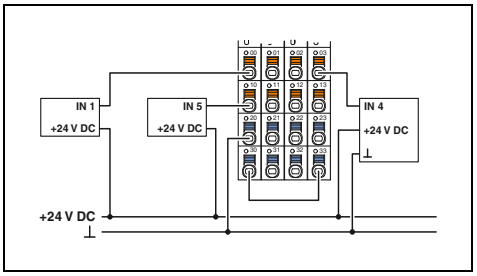

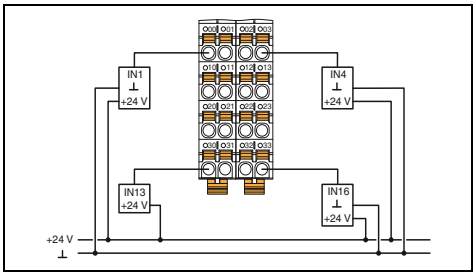

	Technical data	Technical data	
		AXL F DI16/1 1H	AXL F DI16/1 HS 1H
Local bus interface			
Designation	Axioline F local bus	Axioline F local bus	
Connection method	Bus base module	Bus base module	
Power supply for module electronics			
Communications power U_{Bus}	5 V DC (via bus base module)	5 V DC (via bus base module)	
Current consumption from U_{Bus}	max. 120 mA	max. 120 mA	
I/O supply			
Supply of digital input modules U_I	-	24 V DC	
Supply voltage range U_I	-	19.2 V DC ... 30 V DC (including all tolerances, including ripple)	
Current consumption from U_I	-	20 mA	
Protective circuit	-	Surge protection of the supply voltage Polarity reversal protection of the supply voltage	
Digital inputs			
Connection technology	2-conductor	1-conductor	
Number of inputs	8	16	
Description of the inputs	EN 61131-2 type 1	EN 61131-2 types 1 and 3	
Nominal input voltage U_{IN}	24 V DC	24 V DC	
Nominal input current at U_{IN}	2.5 mA	2.4 mA	2.3 mA
Input filter time	< 1 ms	3000 µs (default) 1000 µs < 100 µs	< 5 µs
Protective circuit	Polarity reversal protection of the inputs	Polarity reversal protection of the inputs	
General data			
Connection method	Push-in connection	Push-in connection	
Connection data rigid / flexible / AWG	0.2 ... 1.5 mm² / 0.2 ... 1.5 mm² / 24 - 16	0.2 ... 1.5 mm² / 0.2 ... 1.5 mm² / 24 - 16	
Weight	173 g	133 g	
Dimensions W / H / D	53.6 mm / 126.1 mm / 54 mm	35 mm / 126.1 mm / 54 mm	

Description	Ordering data Type	Order No.	Pcs./Pkt.	Ordering data Type	Order No.	Pcs./Pkt.
Axioline F digital input module, complete with accessories (bus base module)						
- 8 inputs, U_{IN} = 24 V DC	**AXL F DI8/2 24DC 1F**	2702783	1			
- 8 inputs, U_{IN} = 48 V DC / 60 V DC	**AXL F DI8/2 48/60DC 1F**	2702654	1			
- 8 inputs, U_{IN} = 110 V DC / 220 V DC	**AXL F DI8/2 110/220DC 1F**	2700684	1			
- 16 inputs				**AXL F DI16/1 1H**	2688310	1
- 16 inputs				**AXL F DI16/1 HS 1H**	2701722	1
- 32 inputs						
- 64 inputs						
- For extended temperature range of -40°C ... +70°C						
	Accessories			**Accessories**		
Axioline F bus base module (replacement part)	**AXL F BS F**	2688129	5	**AXL F BS H**	2700992	5

16 inputs

32 inputs

32 / 64 inputs

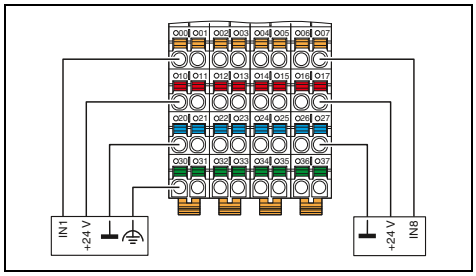

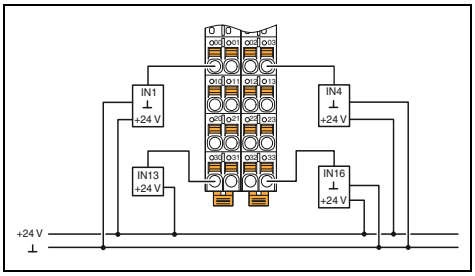

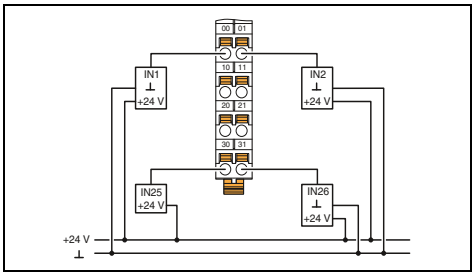

Technical data

Axioline F local bus	
Bus base module	
5 V DC (via bus base module)	
max. 120 mA	
24 V DC	
19.2 V DC ... 30 V DC (including all tolerances, including ripple)	
max. 4 A (2 A or each group of 8 inputs)	
Surge protection of the supply voltage	
Polarity reversal protection of the supply voltage	
4-conductor	
16	
EN 61131-2 types 1 and 3	
24 V DC	
2.4 mA	
500 µs (default)	
< 100 µs	
Polarity reversal protection of the inputs	
Push-in connection	
0.2 ... 1.5 mm² / 0.2 ... 1.5 mm² / 24 - 16	
231 g	
53.6 mm / 129.9 mm / 54 mm	

Ordering data

Type	Order No.	Pcs./Pkt.
AXL F DI16/4 2F	2688022	1
AXL F DI16/4 XC 2F	2701224	1

Accessories

AXL F BS F	2688129	5

Technical data

Axioline F local bus	
Bus base module	
5 V DC (via bus base module)	
max. 120 mA	
24 V DC	
19.2 V DC ... 30 V DC (including all tolerances, including ripple)	
max. 50 mA	
Surge protection of the supply voltage	
Polarity reversal protection of the supply voltage	
1-conductor	
32	
EN 61131-2 types 1 and 3	
24 V DC	
2.4 mA	
3000 µs (default)	
1000 µs	
< 100 µs	
Polarity reversal protection of the inputs	
Push-in connection	
0.2 ... 1.5 mm² / 0.2 ... 1.5 mm² / 24 - 16	
159 g	
35 mm / 129.9 mm / 54 mm	

Ordering data

Type	Order No.	Pcs./Pkt.
AXL F DI32/1 2H	2702052	1

Accessories

AXL F BS H	2700992	5

Technical data

	AXL F DI32/1 1F	AXL F DI64/1 2F
Axioline F local bus		
Bus base module		
5 V DC (via bus base module)		
max. 120 mA (up to HW 04) max. 60 mA (from HW 05)		max. 120 mA
24 V DC		
19.2 V DC ... 30 V DC (including all tolerances, including ripple)		
max. 50 mA		max. 60 mA
Surge protection of the supply voltage		
Polarity reversal protection of the supply voltage		
1-conductor		
32		64
EN 61131-2 types 1 and 3		
24 V DC		
2.4 mA		
3000 µs (default)		
1000 µs		
< 100 µs		
Polarity reversal protection of the inputs		
Push-in connection		
0.2 ... 1.5 mm² / 0.2 ... 1.5 mm² / 24 - 16		
167 g		231 g
53.6 mm / 126.1 mm / 54 mm		53.6 mm / 129.9 mm / 54 mm

Ordering data

Type	Order No.	Pcs./Pkt.
AXL F DI32/1 1F	2688035	1
AXL F DI64/1 2F	2701450	1
AXL F DI32/1 XC 1F	2701226	1

Accessories

AXL F BS F	2688129	5

For the control cabinet (IP20) – Axioline F

Digital output modules

These modules are designed for use within an Axioline F station.

The digital output modules are used to output digital 24 V DC signals. Actuators with up to 3 conductors can be connected.

Features:

– Short-circuit-proof outputs
– Output behavior can be adjusted for when local bus communication is aborted
– Stored device rating plate

8 outputs,
2 A / 16 outputs

16 outputs,
FLK20 connection for system cabling

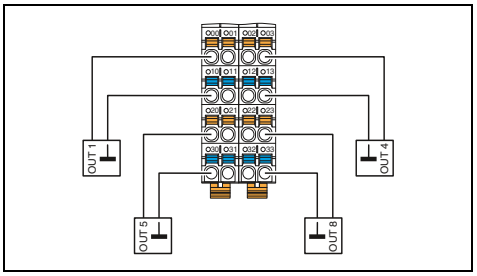

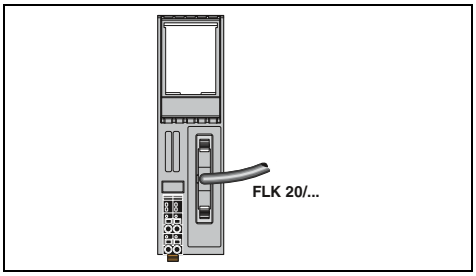

Technical data

	AXL F DO8/2 2A 1H	AXL F DO16/1 1H	AXL F DO16/1 1H
Local bus interface			
Designation	Axioline F local bus		Axioline F local bus
Connection method	Bus base module		Bus base module
Power supply for module electronics			
Communications power U_{Bus}	5 V DC (via bus base module)		5 V DC (via bus base module)
Current consumption from U_{Bus}	max. 150 mA	max. 120 mA (up to HW 02) max. 60 mA (from HW 03)	max. 120 mA
I/O supply			
Supply of digital output modules U_O	24 V DC		24 V DC
Supply voltage range U_O	19.2 V DC ... 30 V DC (including all tolerances, including ripple)		19.2 V DC ... 30 V DC (including all tolerances, including ripple)
Current consumption from U_O	max. 16 A (provide external protection; if the total current of 8 A is exceeded, connect the supply at the power connector parallel via both terminal points.)	max. 8 A (provide external protection)	max. 8 A (provide external protection)
Protective circuit	Surge protection of the supply voltage Polarity reversal protection of the supply voltage		Surge protection of the supply voltage Polarity reversal protection of the supply voltage
Digital outputs			
Connection technology	2-conductor	1-conductor	FLK connector (20-pos.)
Number of outputs	8	16	16
Output voltage	24 V		24 V
Maximum output current per channel	2 A	500 mA	500 mA
Maximum output current per module	16 A (provide external protection)	8 A (provide external protection)	8 A (provide external protection)
Behavior in the event of overload	Shutdown with automatic restart		Shutdown with automatic restart
Protective circuit	Short-circuit protection, overload protection of the outputs		Short-circuit protection, overload protection of the outputs
General data			
Connection method	Push-in connection		Push-in connection
Connection data rigid / flexible / AWG	0.5 ... 1.5 mm² / 0.5 ... 1.5 mm² / 20 - 16	0.2 ... 1.5 mm² / 0.2 ... 1.5 mm² / 24 - 16	0.2 ... 1.5 mm² / 0.2 ... 1.5 mm² / 24 - 16
Weight	136 g	134 g	108 g
Dimensions W / H / D	35 mm / 126.1 mm / 54 mm		35 mm / 126.1 mm / 54 mm
EMC note			Class A product, see page 527

Ordering data

Description	Type	Order No.	Pcs./Pkt.	Type	Order No.	Pcs./Pkt.
Axioline F digital output module, complete with accessories (bus base module)						
- 8 outputs	**AXL F DO8/2 2A 1H**	2688381	1			
- 16 outputs	**AXL F DO16/1 1H**	2688349	1	**AXL F DO16 FLK 1H**	2701813	1
- 32 outputs						
- For extended temperature range of -40°C ... +70°C	**AXL F DO8/2 2A XC 1H**	1035427	1			

Accessories

Axioline F bus base module (replacement part)	**AXL F BS H**	2700992	5	**AXL F BS H**	2700992	5

16 outputs

16 / 32 outputs

32 / 64 outputs

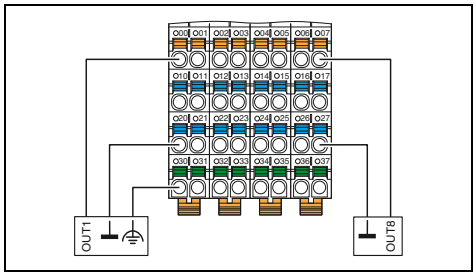

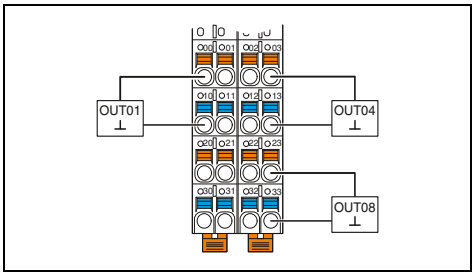

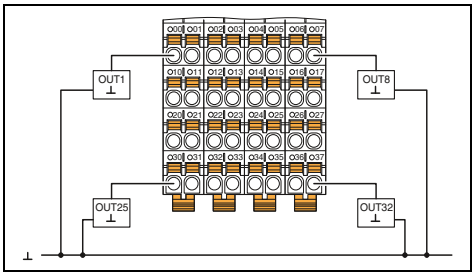

Technical data

Axioline F local bus Bus base module	
5 V DC (via bus base module) max. 120 mA (up to HW 04) max. 60 mA (from HW 05)	
24 V DC 19.2 V DC ... 30 V DC (including all tolerances, including ripple)	
max. 8 A (provide external protection)	
Surge protection of the supply voltage Polarity reversal protection of the supply voltage	
3-conductor 16 24 V 500 mA 8 A (provide external protection)	
Shutdown with automatic restart Short-circuit protection, overload protection of the outputs	
Push-in connection 0.2 ... 1.5 mm² / 0.2 ... 1.5 mm² / 24 - 16	
234 g 53.6 mm / 129.9 mm / 54 mm	

Ordering data

Type	Order No.	Pcs./Pkt.
AXL F DO16/3 2F	2688048	1
AXL F DO16/3 XC 2F	2701228	1

Accessories

AXL F BS F	2688129	5

Technical data

	AXL F DO16/2 2H	AXL F DO32/1 2H
Axioline F local bus Bus base module		
5 V DC (via bus base module) max. 60 mA		
24 V DC 19.2 V DC ... 30 V DC (including all tolerances, including ripple)		
	max. 8 A (provide external protection)	max. 16 A (provide external protection; if the total current of 8 A is exceeded, connect the supply at the power connector parallel via both terminal points.)
Surge protection of the supply voltage Polarity reversal protection of the supply voltage		
	2-conductor 16	1-conductor 32
24 V DC 500 mA		
	8 A (provide external protection)	16 A (provide external protection)
Shutdown with automatic restart Short-circuit protection, overload protection of the outputs		
Push-in connection 0.2 ... 1.5 mm² / 0.2 ... 1.5 mm² / 24 - 16		
	160 g	161 g
35 mm / 129.9 mm / 54 mm		

Ordering data

Type	Order No.	Pcs./Pkt.
AXL F DO16/2 2H	1027904	1
AXL F DO32/1 2H	1004925	1

Accessories

AXL F BS H	2700992	5

Technical data

	AXL F DO32/1 1F	AXL F DO64/1 2F
Axioline F local bus Bus base module		
5 V DC (via bus base module)		
	max. 120 mA (up to HW 04) max. 60 mA (from HW 05)	max. 120 mA (up to HW 02) max. 60 mA (from HW 03)
24 V DC 19.2 V DC ... 30 V DC (including all tolerances, including ripple)		
	max. 8 A (up to HW 04, provide external protection)	max. 16 A (provide external protection; if the total current of 8 A is exceeded, connect the supply at the power connector parallel via both terminal points.)
Surge protection of the supply voltage Polarity reversal protection of the supply voltage		
1-conductor		
	32	64
	24 V DC	24 V
500 mA		
	8 A (up to HW 04, provide external protection)	16 A (provide external protection)
Shutdown with automatic restart Short-circuit protection, overload protection of the outputs		
Push-in connection 0.2 ... 1.5 mm² / 0.2 ... 1.5 mm² / 24 - 16		
	191 g	260 g
	53.6 mm / 126.1 mm / 54 mm	53.6 mm / 129.9 mm / 54 mm

Ordering data

Type	Order No.	Pcs./Pkt.
AXL F DO32/1 1F	2688051	1
AXL F DO32/1 XC 1F	2701230	1

Accessories

AXL F BS F	2688129	5

Digital output modules

This module is designed for use within an Axioline F station.

The digital output module is used to output digital signals in the wide voltage range between 12 V AC and 253 V AC. Connection is via 2- or 3-conductor technology.

Features:

– Output behavior can be adjusted for when local bus communication is aborted
– Stored device rating plate

4 outputs,
12 ... 253 V AC wide range

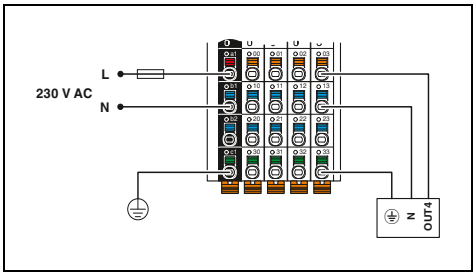

Technical data

Local bus interface	
Designation	Axioline F local bus
Connection method	Bus base module
Power supply for module electronics	
Communications power U_{Bus}	5 V DC (via bus base module)
Current consumption from U_{Bus}	max. 120 mA
I/O supply	
Supply of digital output modules U_O	230 V AC
Supply voltage range U_O	12 V AC ... 253 V AC (including all tolerances, including ripple, 50 Hz ... 60 Hz)
Current consumption from U_O	max. 8 A (provide external protection)
Protective circuit	Surge protection of the supply voltage
Digital outputs	
Connection technology	3-conductor
Number of outputs	4 (Triac outputs with zero voltage switch)
Output voltage	230 V AC
Maximum output current per channel	2 A AC
Maximum output current per module	8 A AC (provide external protection)
Behavior in the event of overload	Output may be damaged
Protective circuit	External protection required
General data	
Connection method	Push-in connection
Connection data rigid / flexible / AWG	0.5 ... 1.5 mm² / 0.5 ... 1.5 mm² / 20 - 16
Weight	188 g
Dimensions W / H / D	53.6 mm / 126.1 mm / 54 mm

Ordering data

Description	Type	Order No.	Pcs./Pkt.
Axioline F digital output module, complete with accessories (bus base module)	**AXL F DO4/3 AC 1F**	2702068	1

Accessories

Axioline F bus base module (replacement part)	**AXL F BS F**	2688129	5

Digital output modules

This module is designed for use within an Axioline F station.

The digital output module is used to output digital signals via relays with floating N/O contacts. Connection is via 2-conductor technology.

Features:

– Impulse withstand voltage: 5 kV
– Developed in accordance with the requirements of IEC 61850-3
– Output behavior can be adjusted for when local bus communication is aborted
– Stored device rating plate

IEC 61850-3

4 relay outputs

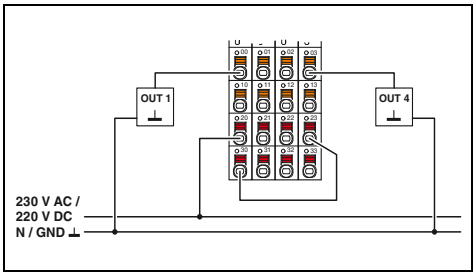

Technical data

Local bus interface	
Designation	Axioline F local bus
Connection method	Bus base module
Power supply for module electronics	
Communications power U_{Bus}	5 V DC (via bus base module)
Current consumption from U_{Bus}	max. 280 mA (all relays pick up)
Relay outputs	
Contact type	4 floating N/O contacts
Output voltage range	24 V DC ... 220 V DC -20% / +15% 24 V AC ... 230 V AC -20% / +15% (50/60 Hz)
Switching current	max. 8 A AC (cos phi = 1)
Switching capacity	max. 2000 VA
Switching rate	max. 6 (per minute)
Release time	< 5 ms
General data	
Connection method	Push-in connection
Connection data rigid / flexible / AWG	0.2 ... 1.5 mm^2 / 0.2 ... 1.5 mm^2 / 24 - 16
Weight	206 g
Dimensions W / H / D	53.6 mm / 126.1 mm / 54 mm

Ordering data

Description	Type	Order No.	Pcs./Pkt.
Axioline F digital output module, complete with accessories (bus base module)	**AXL F DOR4/2 AC/220DC 1F**	2700608	1

Accessories

Axioline F bus base module (replacement part)	**AXL F BS F**	2688129	5

Digital input and output modules

These modules are designed for use within an Axioline F station.

They are used to acquire and output digital 24 V DC signals.

You can adjust the filter times of the inputs to increase noise immunity.

Features:

- Connection of sensors or actuators in 1-, 2- or 3-conductor technology
- Minimum update time of < 100 µs
- Adjustable filter times
- Maximum input frequency: 5 kHz
- Short-circuit-proof outputs
- Stored device rating plate

8 inputs and 8 outputs

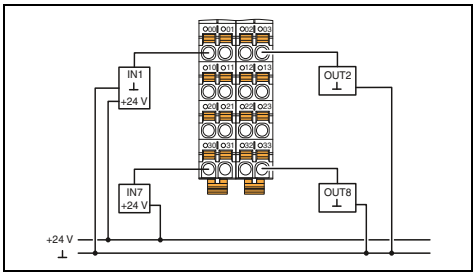

Technical data

Local bus interface		
Designation		Axioline F local bus
Connection method		Bus base module
Power supply for module electronics		
Communications power U_{Bus}		5 V DC (via bus base module)
Current consumption from U_{Bus}		max. 120 mA
I/O supply		
Digital input and output module supply U_{IO}		24 V DC
Supply voltage range U_{IO}		19.2 V DC ... 30 V DC (including all tolerances, including ripple)
Protective circuit		Surge protection of the supply voltage Polarity reversal protection of the supply voltage
Digital inputs		
Connection technology		1-conductor
Number of inputs		8
Description of the inputs		EN 61131-2 types 1 and 3
Nominal input voltage U_{IN}		24 V DC
Nominal input current at U_{IN}		2.4 mA
Input filter time		3000 µs (default) / 1000 µs / < 100 µs
Protective circuit		Polarity reversal protection of the inputs
Digital outputs		
Connection technology		1-conductor
Number of outputs		8
Output voltage		24 V DC
Maximum output current per channel		500 mA
Maximum output current per module		4 A (provide external protection)
Behavior in the event of overload		Shutdown with automatic restart
Protective circuit		Short-circuit protection, overload protection of the outputs
General data		
Connection method		Push-in connection
Connection data rigid / flexible / AWG		0.2 ... 1.5 mm^2 / 0.2 ... 1.5 mm^2 / 24 - 16
Weight		133 g
Dimensions	W / H / D	35 mm / 126.1 mm / 54 mm
EMC note		Class A product, see page 527

Ordering data

Description	Type	Order No.	Pcs./Pkt.
Axioline F digital input/output module, complete with accessories (bus base module)			
- 8 inputs, 8 outputs	**AXL F DI8/1 DO8/1 1H**	2701916	1
- 16 inputs, 8 outputs - 16 inputs, 16 outputs - For extended temperature range of -40°C ... +70°C	**AXL F DI8/1 DO8/1 XC 1H**	2702017	1

Accessories

Axioline F bus base module (replacement part)	**AXL F BS H**	2700992	5

8 inputs and 8 outputs

16 inputs and 8 outputs, 2 A

16 inputs and 16 outputs

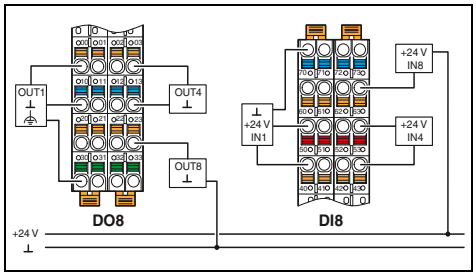

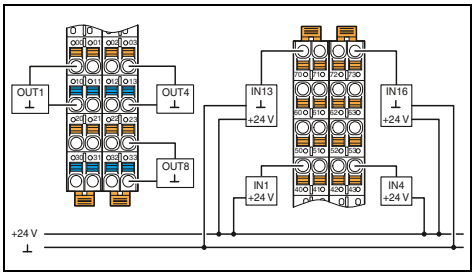

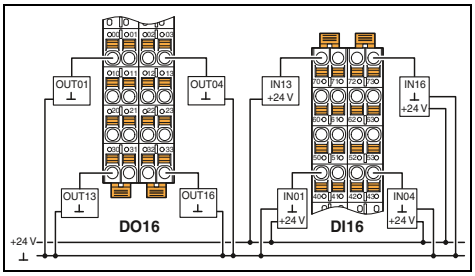

Technical data

Axioline F local bus Bus base module
5 V DC (via bus base module) max. 120 mA
24 V DC 19.2 V DC ... 30 V DC (including all tolerances, including ripple) Surge protection of the supply voltage Polarity reversal protection of the supply voltage
3-conductor 8 EN 61131-2 types 1 and 3 24 V DC 2.4 mA 3000 µs (default) / 1000 µs / < 100 µs Polarity reversal protection of the inputs
3-conductor 8 24 V DC 500 mA 8 A (provide external protection) Shutdown with automatic restart Short-circuit protection, overload protection of the outputs
Push-in connection 0.2 ... 1.5 mm² / 0.2 ... 1.5 mm² / 24 - 16 159 g 35 mm / 129.9 mm / 54 mm

Ordering data

Type	Order No.	Pcs./Pkt.
AXL F DI8/3 DO8/3 2H	2702071	1

Accessories

AXL F BS H	2700992	5

Technical data

Axioline F local bus Bus base module
5 V DC (via bus base module) max. 120 mA
24 V DC 19.2 V DC ... 30 V DC (including all tolerances, including ripple) Surge protection of the supply voltage Polarity reversal protection of the supply voltage
1-conductor 16 EN 61131-2 types 1 and 3 24 V DC 2.4 mA 3000 µs (default) / 1000 µs / < 100 µs Polarity reversal protection of the inputs
2-conductor 8 24 V DC 2 A 16 A (provide external protection) Shutdown with automatic restart Short-circuit protection, overload protection of the outputs
Push-in connection 0.2 ... 1.5 mm² / 0.2 ... 1.5 mm² / 24 - 16 159 g 35 mm / 129.9 mm / 54 mm

Ordering data

Type	Order No.	Pcs./Pkt.
AXL F DI16/1 DO8/2-2A 2H	2702291	1

Accessories

AXL F BS H	2700992	5

Technical data

Axioline F local bus Bus base module
5 V DC (via bus base module) max. 120 mA
24 V DC 19.2 V DC ... 30 V DC (including all tolerances, including ripple) Surge protection of the supply voltage Polarity reversal protection of the supply voltage
1-conductor 16 EN 61131-2 types 1 and 3 24 V DC 2.4 mA 3000 µs (default) / 1000 µs / < 100 µs Polarity reversal protection of the inputs
1-conductor 16 24 V DC 500 mA 8 A (provide external protection) Shutdown with automatic restart Short-circuit protection, overload protection of the outputs
Push-in connection 0.2 ... 1.5 mm² / 0.2 ... 1.5 mm² / 24 - 16 159 g 35 mm / 129.9 mm / 54 mm

Ordering data

Type	Order No.	Pcs./Pkt.
AXL F DI16/1 DO16/1 2H	2702106	1

Accessories

AXL F BS H	2700992	5

Analog input modules

These modules are designed for use within an Axioline F station.

They are used to acquire standard analog current and voltage signals. Connection is via 2-, 3- or 4-conductor technology and a shield connection.

Features:

– Up to 8 analog differential signal inputs
– Current and voltage measuring ranges
– Input filter selection
– Minimum update time of 250 µs
– 16-bit measured value representation
– Integrated sensor supply
– Stored device rating plate

4 inputs
Current signals

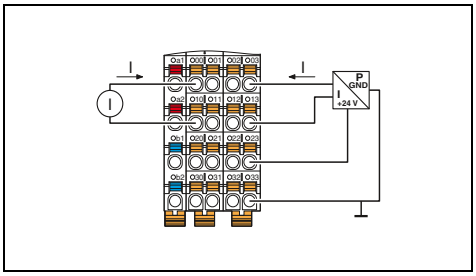

Technical data

Local bus interface	
Designation	Axioline F local bus
Connection method	Bus base module
Power supply for module electronics	
Communications power U_{Bus}	5 V DC (via bus base module)
Current consumption from U_{Bus}	max. 150 mA
I/O supply	
Supply for analog modules (U_A)	24 V DC
Protective circuit	Surge protection of the supply voltage Polarity reversal protection of the supply voltage Transient protection
Analog inputs	
Connection technology	2-, 3-, 4-conductor
Number of inputs	4
Voltage input signal	-
Current input signal	0 mA ... 20 mA / 4 mA ... 20 mA / -20 mA ... 20 mA
Characteristics	
Measured value representation	16 bits (15 bits + sign bit)
Input filter	30 Hz, 12 kHz and mean-value generation (can be parameterized)
Precision	0.1% (of measuring range final value for active mean-value generation and 30 Hz filter)
General data	
Connection method	Push-in connection
Connection data rigid / flexible / AWG	0.2 ... 1.5 mm² / 0.2 ... 1.5 mm² / 24 - 16
Weight	145 g
Dimensions W / H / D	35 mm / 126.1 mm / 54 mm

Ordering data

Description	Type	Order No.	Pcs./Pkt.
Axioline F analog input module, complete with accessories (bus base module)			
- 4 inputs	**AXL F AI4 I 1H**	2688491	1
- 8 inputs			
- For extended temperature range of -40°C ... +70°C	**AXL F AI4 I XC 1H**	2702007	1

Accessories

Axioline F bus base module (replacement part)	**AXL F BS H**	2700992	5
Axioline shield connection set	**AXL SHIELD SET**	2700518	1

4 inputs
Voltage signals

8 inputs

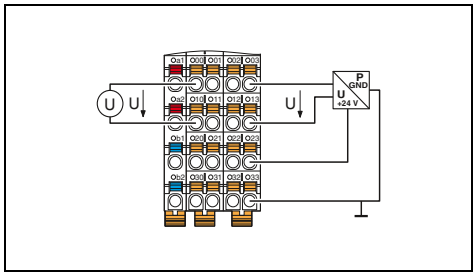

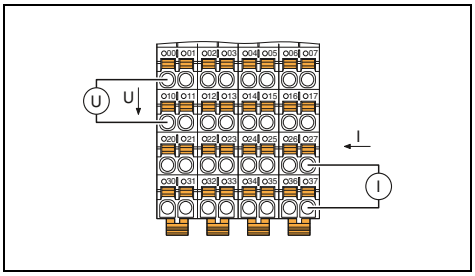

Technical data

Axioline F local bus	
Bus base module	
5 V DC (via bus base module)	
max. 150 mA	
24 V DC	
Surge protection of the supply voltage	
Polarity reversal protection of the supply voltage	
Transient protection supply voltage	
2-, 3-, 4-conductor	
4	
0 V ... 5 V / -5 V ... 5 V / 0 V ... 10 V / -10 V ... 10 V	
-	
16 bits (15 bits + sign bit)	
30 Hz, 12 kHz and mean-value generation (can be parameterized)	
0.1% (of measuring range final value for active mean-value generation and 30 Hz filter)	
Push-in connection	
0.2 ... 1.5 mm² / 0.2 ... 1.5 mm² / 24 - 16	
145 g	
35 mm / 126.1 mm / 54 mm	

Ordering data

Type	Order No.	Pcs./Pkt.
AXL F AI4 U 1H	2688501	1
AXL F AI4 U XC 1H	2702008	1

Accessories

AXL F BS H	2700992	5
AXL SHIELD SET	2700518	1

Technical data

Axioline F local bus	
Bus base module	
5 V DC (via bus base module)	
max. 130 mA	
24 V DC	
Surge protection of the supply voltage	
Polarity reversal protection of the supply voltage	
Transient protection supply voltage	
2-conductor	
8	
0 V ... 5 V / -5 V ... 5 V / 0 V ... 10 V / -10 V ... 10 V	
0 mA ... 20 mA / 4 mA ... 20 mA / -20 mA ... 20 mA	
16 bits (15 bits + sign bit)	
30 Hz, 12 kHz and mean-value generation (can be parameterized)	
0.1% (of measuring range final value for active mean-value generation and 30 Hz filter)	
Push-in connection	
0.2 ... 1.5 mm² / 0.2 ... 1.5 mm² / 24 - 16	
204 g	
53.6 mm / 126.1 mm / 54 mm	

Ordering data

Type	Order No.	Pcs./Pkt.
AXL F AI8 1F	2688064	1
AXL F AI8 XC 1F	2701232	1

Accessories

AXL F BS F	2688129	5
AXL SHIELD SET	2700518	1

Analog input and output modules

This module is designed for use within an Axioline F station.

It is used to acquire and output standard analog current and voltage signals. Connection is via 2-conductor technology and a shield connection.

Features:

– 2 analog bipolar inputs and outputs each
– Current and voltage ranges
– Minimum update time of 250 µs
– 16-bit output value
– Overload and short-circuit protected
– Stored device rating plate

2 inputs and 2 outputs

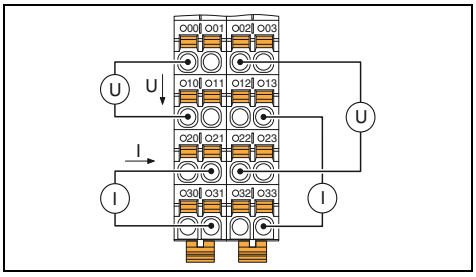

Technical data

Local bus interface	
Designation	Axioline F local bus
Connection method	Bus base module
Power supply for module electronics	
Communications power U_{Bus}	5 V DC (via bus base module)
Current consumption from U_{Bus}	max. 150 mA
I/O supply	
Supply for analog modules (U_A)	24 V DC
Analog inputs	
Connection technology	2-conductor
Number of inputs	2
Voltage input signal	0 V ... 5 V / -5 V ... 5 V / 0 V ... 10 V / -10 V ... 10 V
Current input signal	0 mA ... 20 mA / 4 mA ... 20 mA / -20 mA ... 20 mA
Analog outputs	
Connection technology	2-conductor
Number of outputs	2
Voltage output signal	0 V ... 5 V / -5 V ... 5 V / 0 V ... 10 V / -10 V ... 10 V
Current output signal	0 mA ... 20 mA / 4 mA ... 20 mA / -20 mA ... 20 mA
Load/output load current output	≤ 500 Ω
Protective circuit	Short-circuit and overload protection Transient protection
Characteristics	
Representation of output values	16 bits (15 bits + sign bit)
Precision	0.1% (of measuring range final value for active mean-value generation and 30 Hz filter) typ. 0.1% (of output range final value)
General data	
Connection method	Push-in connection
Connection data rigid / flexible / AWG	0.2 ... 1.5 mm² / 0.2 ... 1.5 mm² / 24 - 16
Weight	200 g
Dimensions W / H / D	35 mm / 126.1 mm / 54 mm

Ordering data

Description	Type	Order No.	Pcs./Pkt.
Axioline F analog I/O module, complete with accessories (bus base module)			
	AXL F AI2 AO2 1H	2702072	1
- For extended temperature range of -40°C ... +70°C	**AXL F AI2 AO2 XC 1H**	1035429	1

Accessories

Axioline F bus base module (replacement part)	**AXL F BS H**	2700992	5
Axioline shield connection set	**AXL SHIELD SET**	2700518	1

Analog output modules

These modules are designed for use within an Axioline F station.

They are used to output standard analog current and voltage signals. Connection is via 2-conductor technology and a shield connection.

Features:

- Up to 8 analog bipolar outputs
- Current and voltage ranges
- Minimum update time of 250 µs
- 16-bit output value
- Overload and short-circuit protected
- Stored device rating plate

4 outputs

8 outputs

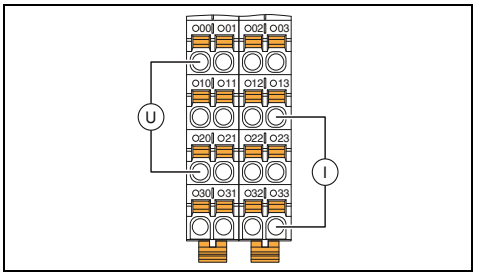

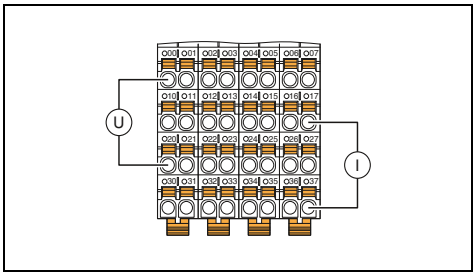

	Technical data	Technical data
Local bus interface		
Designation	Axioline F local bus	Axioline F local bus
Connection method	Bus base module	Bus base module
Power supply for module electronics		
Communications power U_{Bus}	5 V DC (via bus base module)	5 V DC (via bus base module)
Current consumption from U_{Bus}	max. 150 mA	max. 130 mA
I/O supply		
Supply for analog modules (U_A)	24 V DC	24 V DC
Analog outputs		
Connection technology	2-conductor	2-conductor
Number of outputs	4	8
Voltage output signal	0 V ... 5 V / -5 V ... 5 V / 0 V ... 10 V / -10 V ... 10 V	0 V ... 5 V / -5 V ... 5 V / 0 V ... 10 V / -10 V ... 10 V
Current output signal	0 mA ... 20 mA / 4 mA ... 20 mA	0 mA ... 20 mA / 4 mA ... 20 mA / -20 mA ... 20 mA
Load/output load current output	≤ 500 Ω	to 500 Ω
Protective circuit	Short-circuit and overload protection Transient protection	Short-circuit and overload protection Transient protection
Characteristics		
Representation of output values	16 bits (15 bits + sign bit)	16 bits (15 bits + sign bit)
Precision	typ. 0.1% (of output range final value)	typ. 0.1% (of output range final value)
General data		
Connection method	Push-in connection	Push-in connection
Connection data rigid / flexible / AWG	0.2 ... 1.5 mm² / 0.2 ... 1.5 mm² / 24 - 16	0.2 ... 1.5 mm² / 0.2 ... 1.5 mm² / 24 - 16
Weight	145 g	260 g
Dimensions W / H / D	35 mm / 126.1 mm / 54 mm	53.6 mm / 126.1 mm / 54 mm

Description	Ordering data: Type	Order No.	Pcs./Pkt.	Ordering data: Type	Order No.	Pcs./Pkt.
Axioline F analog output module, complete with accessories (bus base module)						
- 4 outputs	**AXL F AO4 1H**	2688527	1			
- 8 outputs				**AXL F AO8 1F**	2688080	1
- For extended temperature range of -40°C ... +70°C	**AXL F AO4 XC 1H**	2702153	1	**AXL F AO8 XC 1F**	2701237	1

	Accessories:			Accessories:		
Axioline F bus base module (replacement part)	**AXL F BS H**	2700992	5	**AXL F BS F**	2688129	5
Axioline shield connection set	**AXL SHIELD SET**	2700518	1	**AXL SHIELD SET**	2700518	1

Temperature measurement modules

These modules are designed for use within an Axioline F station.

They are used to acquire data from resistive temperature sensors or thermocouples. Connection is via 2-, 3- or 4-conductor technology and an overall shielding braid.

RTD features:

– 0 Ω to 500 Ω and 0 Ω to 5 kΩ linear inputs
– Programmable filters
– Short-circuit-proof inputs
– Stored device rating plate

Features of UTH:

– Linear voltages from -100 mV to +100 mV
– 1 input from -5 V to +5 V
– 4 Pt 100 inputs (external cold junction)
– Configurable cold junction type
– Stored device rating plate

4 RTD inputs

8 RTD inputs

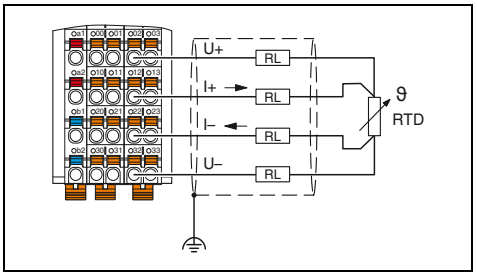

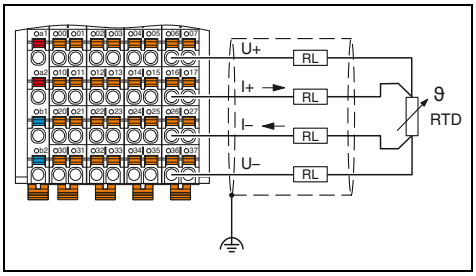

	Technical data	Technical data
Local bus interface		
Designation	Axioline F local bus	Axioline F local bus
Connection method	Bus base module	Bus base module
Power supply for module electronics		
Communications power U_{Bus}	5 V DC (via bus base module)	5 V DC (via bus base module)
Current consumption from U_{Bus}	max. 140 mA	max. 180 mA
I/O supply		
Supply for analog modules (U_A)	24 V DC	24 V DC
Protective circuit	Surge protection of the supply voltage Polarity reversal protection of the supply voltage Transient protection	Surge protection of the supply voltage Polarity reversal protection of the supply voltage Transient protection
Analog inputs		
Connection technology	2-, 3-, 4-conductor (shielded)	2-, 3-, 4-conductor (shielded)
Number of inputs	4 (for resistance temperature detectors)	8 (for resistance temperature detectors)
Protective circuit	Short-circuit protection, overload protection of the inputs Transient protection of inputs Transient protection of sensor supplies	Short-circuit protection, overload protection of the inputs Transient protection of inputs Transient protection of sensor supplies
Sensor types that can be used (RTD)	Pt, Ni, KTY, Cu sensors	Pt, Ni, KTY, Cu sensors
Sensor types that can be used (TC)	-	-
Linear resistance measuring range	0 Ω ... 500 Ω / 0 kΩ ... 5 kΩ	0 Ω ... 500 Ω / 0 kΩ ... 5 kΩ
Linear voltage range	-	-
Characteristics		
Measured value representation	16 bits (15 bits + sign bit)	16 bits (15 bits + sign bit)
Input filter time	40 ms / 60 ms / 100 ms / 120 ms (adjustable)	40 ms / 60 ms / 100 ms / 120 ms (adjustable)
Accuracy	typ. ± 0.1 K (Pt 100 with 3-conductor connection)	typ. ± 0.1 K (Pt 100 with 3-conductor connection)
General data		
Connection method	Push-in connection	Push-in connection
Connection data rigid / flexible / AWG	0.2 ... 1.5 mm² / 0.2 ... 1.5 mm² / 24 - 16	0.2 ... 1.5 mm² / 0.2 ... 1.5 mm² / 24 - 16
Weight	144 g	215 g
Dimensions W / H / D	35 mm / 126.1 mm / 54 mm	53.6 mm / 126.1 mm / 54 mm

	Ordering data			Ordering data		
Description	Type	Order No.	Pcs./Pkt.	Type	Order No.	Pcs./Pkt.
Axioline F analog input module, complete with accessories (bus base module)						
- For connecting resistance temperature detectors	**AXL F RTD4 1H**	2688556	1	**AXL F RTD8 1F**	2688077	1
- For connecting thermocouple sensors						
- For extended temperature range of -40°C ... +70°C	**AXL F RTD4 XC 1H**	1035430	1	**AXL F RTD8 XC 1F**	2701235	1

	Accessories			Accessories		
Axioline F bus base module (replacement part)	**AXL F BS H**	2700992	5	**AXL F BS F**	2688129	5
Axioline shield connection set	**AXL SHIELD SET**	2700518	1	**AXL SHIELD SET**	2700518	1

8 RTD inputs,
high dynamic measuring range

4 UTH inputs

8 UTH inputs

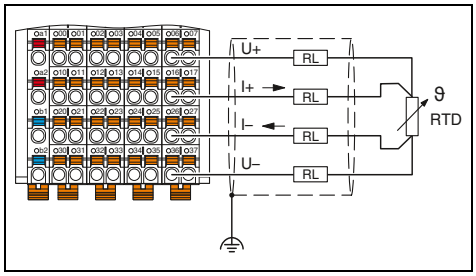

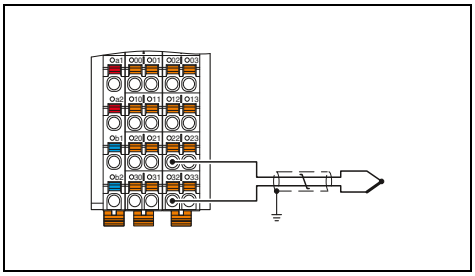

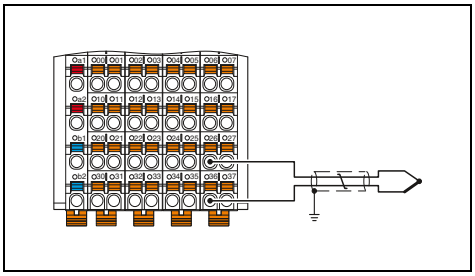

Technical data

Axioline F local bus Bus base module	Axioline F local bus Bus base module	Axioline F local bus Bus base module
5 V DC (via bus base module) max. 180 mA	5 V DC (via bus base module) max. 160 mA	5 V DC (via bus base module) max. 180 mA
24 V DC Surge protection of the supply voltage Polarity reversal protection of the supply voltage Transient protection	24 V DC Surge protection of the supply voltage Polarity reversal protection of the supply voltage Transient protection	24 V DC Surge protection of the supply voltage Polarity reversal protection of the supply voltage Transient protection
2-, 4-conductor (shielded) 8 (for resistance temperature detectors) Short-circuit protection, overload protection of the inputs Transient protection of inputs Transient protection of sensor supplies	2-conductor (shielded, twisted pair) 4 +1 (4 inputs for thermocouples or linear voltage, plus 1 input -5 V to +5 V) Short-circuit protection, overload protection of the inputs Transient protection of inputs	2-conductor (shielded, twisted pair) 8 +1 (8 inputs for thermocouples or linear voltage, plus 1 input -5 V to +5 V) Short-circuit protection, overload protection of the inputs Transient protection of inputs
Pt, Ni, Cu sensors	Pt 100 (2 external cold junctions, can also be used as a sensor input)	Pt 100 (4 external cold junctions, can also be used as a sensor input)
- 0 Ω ... 500 Ω -	- - -100 mV ... 100 mV	U, T, L, J, E, K, N, S, R, B, C, W, HK - -100 mV ... 100 mV
16 bits (15 bits + sign bit) 8 ms / 16 ms / 32 ms / 120 ms (adjustable) typ. ± 0.1 K (Pt 100 with 4-conductor connection)	16 bits (15 bits + sign bit) 40 ms / 60 ms / 100 ms / 120 ms (adjustable) typ. ± 0.19 K (thermocouple type K, plus tolerance of cold junction)	16 bits (15 bits + sign bit) 40 ms / 60 ms / 100 ms / 120 ms (adjustable) typ. ± 0.19 K (thermocouple type K, plus tolerance of cold junction)
Push-in connection 0.2 ... 1.5 mm² / 0.2 ... 1.5 mm² / 24 - 16 215 g 53.6 mm / 126.1 mm / 54 mm	Push-in connection 0.2 ... 1.5 mm² / 0.2 ... 1.5 mm² / 24 - 16 144 g 35 mm / 126.1 mm / 54 mm	Push-in connection 0.2 ... 1.5 mm² / 0.2 ... 1.5 mm² / 24 - 16 203 g 53.6 mm / 126.1 mm / 54 mm

Ordering data

Type	Order No.	Pcs./Pkt.
AXL F RTD8 S 1F	2702120	1

Type	Order No.	Pcs./Pkt.
AXL F UTH4 1H	2688598	1

Type	Order No.	Pcs./Pkt.
AXL F UTH8 1F	2688417	1
AXL F UTH8 XC 1F	2702464	1

Accessories

AXL F BS F	2688129	5
AXL SHIELD SET	2700518	1

AXL F BS H	2700992	5
AXL SHIELD SET	2700518	1

AXL F BS F	2688129	5
AXL SHIELD SET	2700518	1

Serial communication module

This module is designed for use within an Axioline F station.

It is used to connect devices with a serial interface, e.g., bar code scanners.

Features:

- Baud rates of up to 250 kbaud
- Communication via acyclic services or process data
- Support of various protocols (e.g., end-to-end protocol)
- 5 RS-232 hardware handshake signals with status indication via LEDs
- Integrated RS-485/RS-422 termination resistor
- Stored device rating plate

1 serial input and output channel as RS-485/RS-422 or RS-232 version

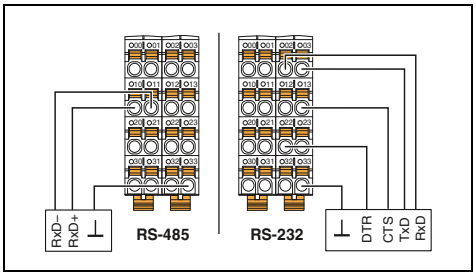

Technical data

Local bus interface	
Designation	Axioline F local bus
Connection method	Bus base module
Serial port	
Interface	RS-232, RS-485, RS-422
Connection method	Push-in connection
Power supply for module electronics	
Communications power U_{Bus}	5 V DC (via bus base module)
Current consumption from U_{Bus}	typ. 200 mA
Serial input/output channel	
Input buffer	4 kByte
Output buffer	1 kByte
Transmission speed	110 bps ... 250 kbps (can be parameterized)
Data bits	5 ... 8
Stop bits	1 or 2
Parity	Even, odd or no parity
Transmission type	Transparent mode, end-to-end mode, XON/XOFF, Modbus/RTU
General data	
Connection method	Push-in connection
Connection data rigid / flexible / AWG	0.2 ... 1.5 mm² / 0.2 ... 1.5 mm² / 24 - 16
Weight	135 g
Dimensions W / H / D	35 mm / 126.1 mm / 54 mm

Ordering data

Description	Type	Order No.	Pcs./Pkt.
Axioline F communication module, complete with accessories (bus base module)			
- 1 serial input and output channel as RS-485/RS-422 or RS-232 version	**AXL F RS UNI 1H**	2688666	1
- For extended temperature range of -40°C ... +70°C	**AXL F RS UNI XC 1H**	2702006	1

Accessories

Axioline F bus base module (replacement part)	**AXL F BS H**	2700992	5
Axioline shield connection set	**AXL SHIELD SET**	2700518	1

IO-Link master module

new

8 IO-Link ports

This module is designed for use within an Axioline F station.

The IO-Link master enables the operation of up to eight IO-Link devices. Alternatively, you can connect a standard sensor or actuator to each port. Connected IO-Link devices can be parameterized easily and conveniently using the IOL-CONF parameterization software.

Features:

- Connection of eight IO-Link devices
- Alternatively: connection of one digital sensor or actuator per port
- Connection of IO-Link devices in 3-conductor technology
- Connection of sensors in 3-conductor technology
- Connection of actuators in 2-conductor technology
- Parameter data storage on the master
- IO-Link specification V1.1.2
- Stored device rating plate

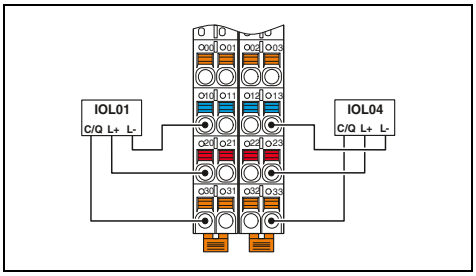

Technical data

Local bus interface		
Connection method		Bus base module
Power supply for module electronics		
Communications power U_{Bus}		5 V DC (via bus base module)
Current consumption from U_{Bus}		max. 50 mA
IO-Link ports		
Connection technology		3-conductor
Number of ports		8 (Class A)
IO-Link port supply L+		
Nominal voltage for I/O supply		24 V DC
Nominal current per IO-Link port		200 mA (at C/Q) 1 A (at L+/L-)
Digital inputs in the SIO mode		
Connection technology		3-conductor
Number of inputs		max. 8 (EN 61131-2 type 1)
Nominal input voltage U_{IN}		24 V DC
Sensor current per channel		max. 1 A (from L+/L-)
Digital outputs in the SIO mode		
Connection technology		2-, 3-conductor
Number of outputs		max. 8
Nominal output voltage		24 V DC
Nominal current per channel		200 mA
General data		
Connection method		Push-in connection
Connection data rigid / flexible / AWG		0.2 ... 1.5 mm^2 / 0.2 ... 1.5 mm^2 / 24 - 16
Weight		162 g
Dimensions	W / H / D	35 mm / 129.9 mm / 54 mm

Ordering data

Description	Type	Order No.	Pcs./Pkt.
Axioline F IO-Link master, complete with accessories (bus base module)	**AXL F IOL8 2H**	1027843	1

Accessories

Axioline F bus base module (replacement part)	**AXL F BS H**	2700992	5

Pulse width module

new

The module is designed for use within an Axioline F station.

Two channels that operate independently of one another offer the option of pulse width modulation (PWM) for the output signals.

The module supports PWM mode and pulse generator mode.

Features:

- 2 independent channels
- Output of 5 V or 24 V signals
- Push-pull output
- Pulse generator
- Nominal current per output: 500 mA for 24 V output
- Resolution of the frequency output can be set: 1 Hz, 0.1 Hz, 0.01 Hz
- Stored device rating plate

Pulse width modulation, frequency generator or pulse/direction signal output

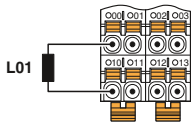

Technical data

Local bus interface		
Designation		Axioline F local bus
Connection method		Bus base module
Power supply for module electronics		
Communications power U_{Bus}		5 V DC (via bus base module)
Current consumption from U_{Bus}		max. 150 mA
PWM output		
Connection technology		2-conductor (shielded, twisted pair)
Number of outputs		2
Nominal output voltage		24 V (U_O - 1.1 V) 5 V DC
Nominal current		max. 500 mA (at 24 V DC) max. 10 mA (at 5 V DC)
Frequency range		0 Hz ... 65535 Hz
Pulse duty factor		0% ... 100%
General data		
Connection method		Push-in connection
Connection data rigid / flexible / AWG		0.2 ... 1.5 mm² / 0.2 ... 1.5 mm² / 24 - 16
Weight		130 g
Dimensions	W / H / D	35 mm / 126.1 mm / 54 mm

Ordering data

Description	Type	Order No.	Pcs./Pkt.
Axioline F function module			
	AXL F PWM2 1H	1007352	1

Accessories

Axioline F bus base module (replacement part)	**AXL F BS H**	2700992	5
Axioline shield connection set	**AXL SHIELD SET**	2700518	1

Power measurement module

The module is designed for use within an Axioline F station.

The power measurement module is used for direct measurement of AC currents up to 5 A, including neutral conductor current and phase conductor voltages up to 400 V AC (phase to neutral conductor) or outer conductor voltages up to 690 V AC (phase to phase).

The module is used to analyze AC networks. For example, you can use it in distribution systems to measure current, voltage, and power, and to identify distortions and harmonics.

You can use the power measurement module in two operating modes.

In "r.m.s. values" mode, the module acquires mains variables in three-phase mains. Mains variables are phase currents, neutral conductor current, phase and outer conductor voltages, real power, reactive power, and apparent power as well as the power factors of phases, energy flow directions, and frequency.

In "instantaneous values" mode, the module acquires the instantaneous (scanning) values of a measuring signal. This measuring mode is used to analyze the waveform of the measuring signal.

Features:

- 4 inputs, 0 A AC ... 5 A AC for phase currents and neutral conductor current
- 3 inputs for outer conductor voltages up to 690 V AC, direct connection supported
- Harmonic analysis
- Determination of maximum value
- Power meter
- Process data update < 500 µs
- Stored device rating plate

Analysis of AC networks

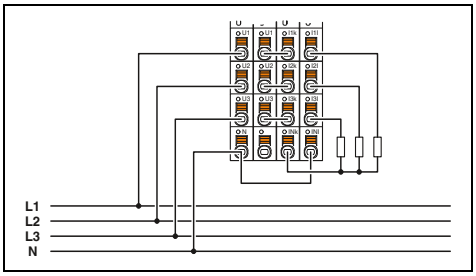

Technical data

Local bus interface		
Designation		Axioline F local bus
Connection method		Bus base module
Power supply for module electronics		
Communications power U_{Bus}		5 V DC (via bus base module)
Current consumption from U_{Bus}		max. 200 mA
Current measuring input		
Number of inputs		4
Nominal current range		0 A AC ... 5 A AC
Overload		1.4 times continuous; 150 A for 10 ms
Precision		0.25% (of the nominal value)
Scanning rate		8k samples/s
Voltage measuring input		
Number of inputs		3
Nominal voltage range		0 V AC ... 690 V AC (conductor-conductor, chained) 0 V AC ... 400 V AC (conductor to neutral conductor, not phase to phase)
Overload		1.2 times the nominal value
Precision		0.25% (of the nominal value)
Scanning rate		8k samples/s
General data		
Connection method		Push-in connection
Connection data rigid / flexible / AWG		1.5 / 1.5 / 16
Weight		245 g
Dimensions	W / H / D	53.6 mm / 126.1 mm / 65.5 mm
EMC note		Class A product, see page 527

Ordering data

Description	Type	Order No.	Pcs./Pkt.
Axioline F power measurement module, complete with accessories (bus base module)	**AXL F PM EF 1F**	2702671	1

Accessories

Axioline F bus base module (replacement part)	**AXL F BS F**	2688129	5

Function/position detection module

This module is designed for use within an Axioline F station.

It is used for counting pulses and for position detection using incremental encoders.

Features:

- Two counter inputs (32-bit)
- Two incremental encoder interfaces (32-bit)
- Symmetrical or asymmetrical encoders can be connected
- Maximum frequency of 300 kHz
- Eight digital inputs (gate, direction signal, latch, home position switch)
- Two digital outputs
- 5 V and 24 V sensor/encoder supply
- Encoder monitoring
- Rotary axis function
- Ten homing methods
- Stored device rating plate

2 counter inputs,
2 incremental encoder interfaces

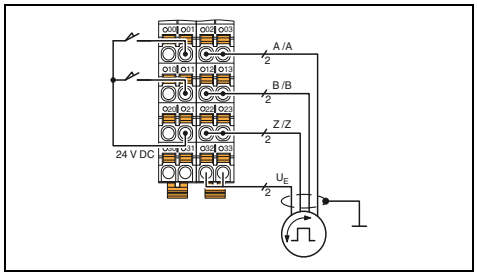

Technical data

Local bus interface	
Designation	Axioline F local bus
Connection method	Bus base module
Power supply for module electronics	
Communications power U_{Bus}	5 V DC (via bus base module)
Current consumption from U_{Bus}	max. 120 mA
I/O supply	
Supply of digital input modules U_I	24 V DC
Supply voltage range U_I	19.2 V DC ... 30 V DC including all tolerances, including ripple
Protective circuit	Surge protection of the supply voltage Polarity reversal protection of the supply voltage
Counter input	
Number of inputs	2 (S1, S2)
Input frequency	max. 300 kHz (1 channel wired)
Input voltage	24 V DC
Encoder inputs	
Number of inputs	2 (A1, /A1, B1, /B1, Z1, /Z1; A2, /A2, B2, /B2, Z2, /Z2)
Encoder signals	Symmetrical and asymmetrical encoders
Input frequency	max. 300 kHz (1 channel wired)
Digital inputs	
Connection technology	1-conductor (optional: 2-, 3-conductor)
Number of inputs	8 (CNT: G1, G2, Dir1, Dir2; INC: Ref1, Ref2, L1, L2)
Description of the inputs	EN 61131-2, type 3
Nominal input voltage U_{IN}	24 V DC
Nominal input current at U_{IN}	2.5 mA (per channel)
Digital outputs	
Number of outputs	2 (Out1, Out2)
Output voltage	24 V DC
Maximum output current per channel	500 mA
Protective circuit	Short-circuit protection, overload protection of the outputs
General data	
Connection method	Push-in connection
Connection data rigid / flexible / AWG	0.2 ... 1.5 mm² / 0.2 ... 1.5 mm² / 24 - 16
Weight	205 g
Dimensions W / H / D	53.6 mm / 126.1 mm / 54 mm

Ordering data

Description	Type	Order No.	Pcs./Pkt.
Axioline F function module			
	AXL F CNT2 INC2 1F	2688093	1
- For extended temperature range of -40°C ... +70°C	**AXL F CNT2 INC2 XC 1F**	2701239	1

Accessories

Axioline F bus base module (replacement part)	**AXL F BS F**	2688129	5
Axioline shield connection set	**AXL SHIELD SET**	2700518	1

Position detection module

This module is designed for use within an Axioline F station.

This module enables you to record data from absolute encoders with SSI interface.

Features:

- Position detection using absolute encoders with SSI interface
- Encoder resolution up to 56 bits
- Transmission frequency of up to 2 MHz
- Gray or binary code
- Reversal of direction of rotation
- Synchronized transmission of encoder values
- Detailed encoder diagnostics
- 16-bit resolution of the analog output value
- D/A conversion time typically 5 µs
- Stored device rating plate

1 SSI interface for absolute encoder, 1 analog output

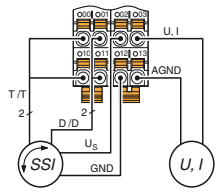

Technical data

Local bus interface	
Designation	Axioline F local bus
Connection method	Bus base module
Power supply for module electronics	
Communications power U_{Bus}	5 V DC (via bus base module)
Current consumption from U_{Bus}	max. 140 mA
I/O supply	
Supply U_I	24 V DC
Protective circuit	Surge protection Reverse polarity protection Transient protection
Encoder inputs	
Input name	SSI interface
Number of inputs	1
Transmission frequency	2 MHz
Adjustable resolution	8 ... 56 bit
Analog outputs	
Connection technology	2-conductor (shielded, twisted pair)
Number of outputs	1
Voltage output signal	0 V ... 5 V / -5 V ... 5 V / 0 V ... 10 V / -10 V ... 10 V
Current output signal	0 mA ... 20 mA / 4 mA ... 20 mA / -20 mA ... 20 mA
Load/output load current output	max. 500 Ω
Protective circuit	Surge protection Short-circuit and overload protection Transient protection
Precision	typ. 0.1% (of output range final value)
Characteristics	
Representation of output values	16 bits (15 bits + sign bit)
General data	
Connection method	Push-in connection
Connection data rigid / flexible / AWG	0.2 ... 1.5 mm² / 0.2 ... 1.5 mm² / 24 - 16
Weight	135 g
Dimensions W / H / D	35 mm / 126.1 mm / 54 mm

Ordering data

Description	Type	Order No.	Pcs./Pkt.
Axioline F function module			
	AXL F SSI1 AO1 1H	2688433	1

Accessories

Axioline F bus base module (replacement part)	**AXL F BS H**	2700992	5
Axioline shield connection set	**AXL SHIELD SET**	2700518	1

Position detection module

This module is designed for use within an Axioline F station.

It is used to evaluate magnetostrictive position sensors with a start/stop interface.

Features:

- 2 channels for magnetostrictive position sensors with start/stop interface
- 5 stop events per channel
- Automatic parameter upload
- 4 digital inputs
- Can be used under extreme ambient conditions
- Extended temperature range (-40°C ... +70°C)
- Stored device rating plate

2 digital pulse interfaces for evaluating magnetostrictive position sensors

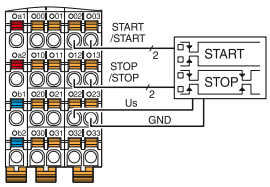

Technical data

Local bus interface		
Designation		Axioline F local bus
Connection method		Bus base module
Power supply for module electronics		
Communications power U_{Bus}		5 V DC (via bus base module)
Current consumption from U_{Bus}		max. 150 mA
I/O supply		
Supply of digital input modules U_I		24 V DC
Supply voltage range U_I		19.2 V DC ... 30 V DC including all tolerances, including ripple
Protective circuit		Surge protection of the supply voltage Polarity reversal protection of the supply voltage Transient protection
Input for magnetostrictive encoders		
Encoder length range		50 mm ... 10 m
Resolution (measuring length)		1 µm
Ultrasonic speed (gradient)		2400 m/s ... 3100 m/s
Digital inputs		
Connection technology		1-conductor
Number of inputs		4
Description of the inputs		EN 61131-2 types 1 and 3
Nominal input voltage U_{IN}		24 V DC
Nominal input current at U_{IN}		2.4 mA
General data		
Connection method		Push-in connection
Connection data rigid / flexible / AWG		0.2 ... 1.5 mm² / 0.2 ... 1.5 mm² / 24 - 16
Weight		135 g
Dimensions	W / H / D	35 mm / 126.1 mm / 54 mm

Ordering data

Description	Type	Order No.	Pcs./Pkt.
Axioline F position detection module, complete with accessories (bus base module) - For extended temperature range of -40°C ... +70°C	**AXL F IMPULSE2 XC 1H**	2702655	1

Accessories

Axioline F bus base module (replacement part)	**AXL F BS H**	2700992	5
Axioline shield connection set	**AXL SHIELD SET**	2700518	1

Strain gauge capture module

This module is designed for use within an Axioline F station.

The module is used to evaluate strain gauges that may be located in weighing cells or load cells, for example. The strain gauges can be connected using 6-conductor or 4-conductor technology.

Features:

- 2 high-precision inputs for strain gauges
- Measuring ranges adjusted with nominal characteristic values upon delivery
- Manual entry of characteristic values
- Process data update can be parameterized in increments between 200 µs and 100 ms
- Path adjustment in the process environment
- 2-point adjustment
- Advanced open-circuit detection
- Sensor supply of up to 115 mA (8 load cells with 350 Ω per channel)
- Each channel: low-impedance, floating N/O contact
- The channels are parameterized independently of one another via the bus system
- Stored device rating plate

2 high-precision inputs

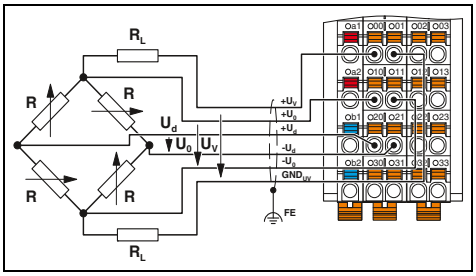

		Technical data
Local bus interface		
Connection method		Bus base module
Power supply for module electronics		
Communications power U_{Bus}		5 V DC (via bus base module)
Current consumption from U_{Bus}		max. 75 mA
I/O supply		
Supply for analog modules (U_A)		24 V DC
Analog inputs		
Connection technology		6- or 4-wire, twisted pair shielded cable
Number of inputs		2
Description of the inputs		Input channels for strain gauge
Bridge difference U_d		Measuring range specified by selecting the characteristic
Bridge voltage U_0		5 V
Analog outputs		
Description of the outputs		Jumper supply
Number of outputs		2
Impedance		> 43 Ω (per channel)
Output current		max. 115 mA (per channel)
Characteristics		
Unipolar		can be parameterized: 350 µV/V ... 6500 µV/V
Measured value representation		32 bits
Process data update		can be parameterized: 200 µs, 500 µs, 1 ms, 2 ms, 5 ms, 10 ms, 12.5 ms, 20 ms, 50 ms, 100 ms
General data		
Connection method		Push-in connection
Connection data rigid / flexible / AWG		0.2 ... 1.5 mm² / 0.2 ... 1.5 mm² / 24 - 16
Weight		150 g
Dimensions	W / H / D	35 mm / 126.1 mm / 54 mm

Ordering data

Description	Type	Order No.	Pcs./Pkt.
Axioline F strain gauge capture module, complete with accessories (bus base module)	**AXL F SGI2 1H**	**2702911**	1

Accessories

Axioline F bus base module (replacement part)	**AXL F BS H**	**2700992**	5
Axioline shield connection set	**AXL SHIELD SET**	**2700518**	1

Modular proxy

The Axioline P modular proxy connects PROFIBUS PA segments directly to a PROFINET network.

The modular station communicates with a PROFINET controller, e.g., a distributed control system (DCS), via a bus coupler. As an option, you can connect up to eight PROFIBUS PA segments to the individual proxy outlets in a compact way. To ensure the individual segments are immune to interference, appropriate shield connection technology is available.

FDT/DTM technology simplifies the startup and device management of the proxy station, which is fully integrated into higher-level control systems, and of the connected PROFIBUS PA devices.

PROFINET redundancy

The AXL P BK PN AF PROFINET bus coupler supports the specification for the implementation of S2 system redundancy using a single bus coupler. Two bus couplers are required in order to satisfy PROFINET system redundancy R1 and R2. The hot-swap capability integrated in the bus coupler ensures high system availability.

PROFIBUS PA power supply

You can supply the PROFIBUS PA segment with power using a single fieldbus power supply module. High failsafe performance and process reliability can be achieved by installing two power supply modules in a single base and thus supplying a PROFIBUS PA segment redundantly. The local LED indicator on the power supply module provides the status of the module and redundancy.

Cost-effective system modernization

PROFIBUS PA sensors can be connected directly to the modular Axioline P proxy. Proven fieldbus technology, such as HART or Modbus/RTU, can therefore be integrated into PROFINET networks via PROFIBUS PA gateways that are connected to the modular Axioline P proxy.

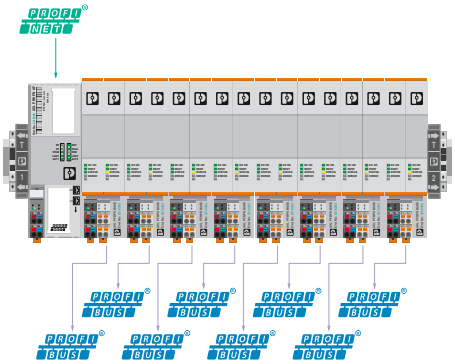

Up to eight PROFIBUS PA segments per station

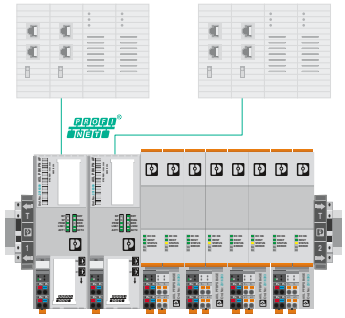

Support of PROFINET system redundancy S2, R1, and R2

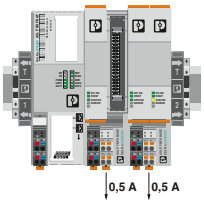

Up to two power supplies per PROFIBUS PA segment

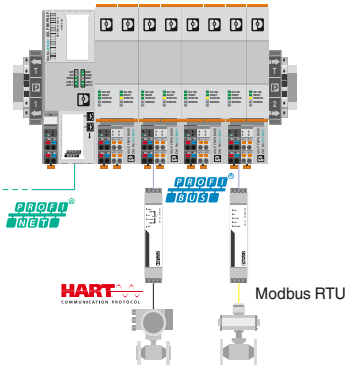

Integration of proven fieldbus technology in PROFINET networks

Product overview

Bus coupler	Fieldbus power supply base	Fieldbus power supply
98	99	99

General technical data

Ambient conditions	
Temperature range (operation)	-40°C ... +65°C
Relative humidity (operation/storage/transport)	5% to 95% (non-condensing)
Vibration	5g in accordance with EN 60068-2-6 / IEC 60068-2-6
Shock	30g in accordance with EN 60068-2-27 / IEC 60068-2-27
Continuous shock	10g in accordance with EN 60068-2-27 / IEC 60068-2-27
Maximum altitude (operation)	2000 m
Degree of protection	IP20

Electromagnetic compatibility	
Noise immunity	In accordance with NE 021

Housing types and dimensions

Bus coupler	Fieldbus power supply base	Fieldbus power supply

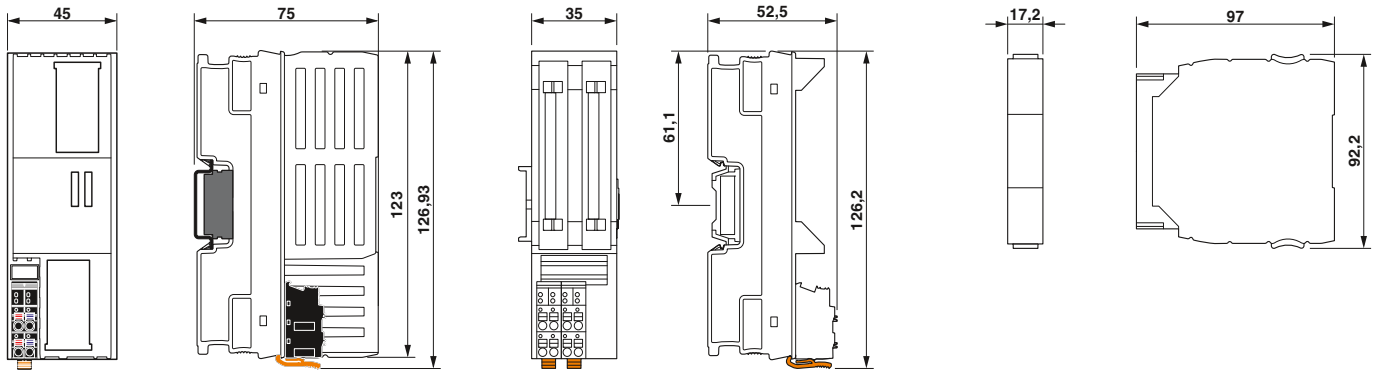

Bus coupler

new

RJ45 connection

In conjunction with a fieldbus power supply base and at least one fieldbus power supply, the AXL P BK PN AF Axioline P bus coupler for PROFINET creates a modular proxy for connecting PROFIBUS PA segments to a PROFINET network.

The bus coupler supports PROFINET system redundancy S2, R1, and R2, and is hot swappable during operation with two bus couplers.

Parameterization, configuration, and diagnostics of the modular proxy are conveniently carried out via FDT/DTM.

Features:

- 2 Ethernet ports with integrated switch
- PROFINET RT support
- Support of PROFINET system redundancy S2, R1, and R2
- Supports up to 8 PROFIBUS PA segments (in conjunction with a fieldbus power supply base and at least one fieldbus power supply)
- Supports PROFIBUS PA profile 4.0
- Alarm behavior in accordance with NE 107

Ex:

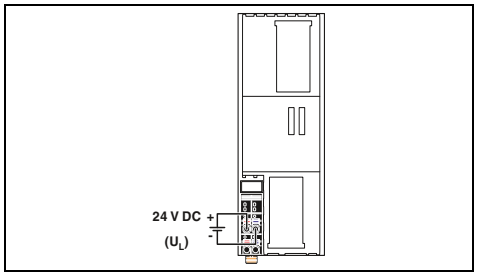

Technical data

Interface		
Fieldbus system		PROFINET
Connection method		RJ45 socket, auto negotiation and auto crossing
Number		2
Transmission speed		100 Mbps (full duplex)
Transmission distance		max. 100 m
Protocols supported		PROFINET
Local bus interface		
Designation		Axioline P local bus
Connection method		Bus base module
Power supply for module electronics		
Supply of communications power U_L		24 V DC
Maximum permissible voltage range		10 V DC ... 32 V DC
Communications power U_{Bus}		5 V DC (via bus base module)
Current supply at U_{Bus}		2 A
Protective circuit		Surge protection of the supply voltage Polarity reversal protection of the supply voltage
General data		
Connection method		Push-in connection
Connection data rigid / flexible / AWG		0.2 ... 1.5 mm² / 0.2 ... 1.5 mm² / 24 - 16
Weight		249 g
Dimensions	W / H / D	45 mm / 126.93 mm / 75 mm
EMC note		Class A product, see page 527

Ordering data

Description	Type	Order No.	Pcs./Pkt.
Axioline P bus coupler - For PROFINET, extended functionality	**AXL P BK PN AF**	2316390	1

Accessories

Axioline P bus base module (replacement part)	**AXL P BS 45**	2316397	1
Axioline P local bus terminator (set)	**AXL P TERM PAIR**	2316402	1

Power supply

In a modular topology, you can connect up to eight PROFIBUS PA segments to the Axioline P modular proxy.

Power is either supplied individually in simplex mode using one power supply module or redundantly using two power supply modules on a power supply base.

Features:

– Redundant power supplies, hot swappable

new

Fieldbus power supply base

new

Fieldbus power supply

		Technical data	Technical data
Interface			
Designation		Axioline P local bus	-
Connection method		Bus base module	-
Input data			
Nominal input voltage range		-	18.5 V DC ... 30.5 V DC
Nominal current range		-	500 mA ... 1.35 A
Output data			
Output voltage range		-	28 V DC ... 30 V DC (on the trunk)
Output current		-	500 mA
Max. power dissipation		-	2.5 W (typical)
Signaling			
Signaling DC OK		-	Green LED
Signaling alarm		-	Red LED
Redundancy indication OK		-	Green LED
Status indication		-	Green LED
General data			
Dimensions	W / H / D	35 / 130 / 125 mm	17 / 92 / 97 mm
Degree of protection		IP20	IP20
Ambient temperature (operation)		-40°C ... 65°C (mounting position: wall mounting on horizontal DIN rail)	-40°C ... 65°C
Ambient temperature (storage/transport)		-40°C ... 85°C	-40°C ... 85°C
Conformance/approvals			
ATEX		Ⓔx II 3 G Ex ec IIC T4 Gc IBExU 18ATEXB018X	Ⓔx II 3 G Ex ec IIC T4 Gc
IECEx		Ex ec IIC T4 Gc IECEx IBE 18.0023X	Ex ec IIC T4 Gc
UL, USA/Canada		Class I, Div. 2, Groups A, B, C, D T4 Class I, Zone 2, IIC T4	Class I, Div. 2, Groups A, B, C, D T4 Class I, Zone 2, IIC T4

	Ordering data			Ordering data		
Description	Type	Order No.	Pcs./Pkt.	Type	Order No.	Pcs./Pkt.
Axioline P fieldbus power supply base						
	AXL P FBPS BASE	2316393	1			
Axioline P fieldbus power supply						
				AXL P FBPS 28DC/0.5A	2316394	1

	Accessories			Accessories		
Axioline P bus base module (replacement part)	**AXL P BS 35**	2316396	1			

For the control cabinet (IP20) – Inline

Product overview

Bus couplers

EtherCAT	EtherNet/IP	Modbus/TCP (UDP)	sercos the automation bus	PROFINET	CANopen
102	103	103	103	105	106

INTERBUS	Modbus/RTU	PROFIBUS	MUX		
107	108	109	109		

Inline controllers

Class 100
48

Adapter terminal

For connecting Inline I/Os to PLCnext Control AXC F 2152
12

Power, segment, and accessory terminals

Power terminals			Boost terminals	Segment terminals	Potential distribution terminals	
24 V DC	120 V AC	230 V AC		24 V DC	24 V DC	GND
110	111	111	112	114	115	115

Inline ECO

Digital input	Digital output	Analog input	Analog output	Temperature measurement	Function terminals
8 channels	4 - 8 channels	4 channels	4 channels	UTH / RTD	Communication
117	117	118	118	119	120

Input and output terminals

Digital input	Digital output	Analog input	Strain gauge	Analog output	Temperature measurement
1 - 32 channels	1 - 32 channels	2 - 8 channels	2 channels	1 - 8 channels	UTH / RTD / TC
122	128	134	138	142	140

Intrinsically safe terminals (Ex i)

PWR	DIO	AIO	TEMP
24 V	4 / 4 channels	4 / 4 channels	4 channels (RTD/TC)
144	145	145	145

Safe I/Os

SafetyBridge Technology	PROFIsafe
265	268

Function terminals

Branch	Communication	Counter / PWM	Position detection and position controller
146	148	153	156

Power-level terminals

Servo amplifier Direct starter Reversing-load starter
159

General accessories

IB IL FIELD ...
Marking fields

ESL 62X...
Marking sheets

ZBF 6-...
Zack marker strip labeling

IL CP
Coding profile

CLIPFIX 35-5
Standard end bracket

FLKM 14-PA-INLINE/...
VARIOFACE front adapter

I-L ATP GN
End cover plate

phoenixcontact.net/products

General technical data

Ambient conditions	
Operating temperature range	-25°C ... +55°C
- ECO terminals	0°C ... +55°C
- Extended (...-XC modules)	-40°C ... +70°C
Relative humidity (operation)	5% to 95% (non-condensing)
Relative humidity (storage)	5% to 95% (non-condensing)
Vibration	5g, 2 hours in each space direction in accordance with IEC 60068-2-6
Shock	25g, over 11 ms in accordance with IEC 60068-2-6
Degree of protection	IP20 (in accordance with IEC 60529)

Electromagnetic compatibility	
Noise emission	EN 61000-6-3
Noise immunity	EN 61000-6-2

Housing types and dimensions

Bus couplers

BK housing

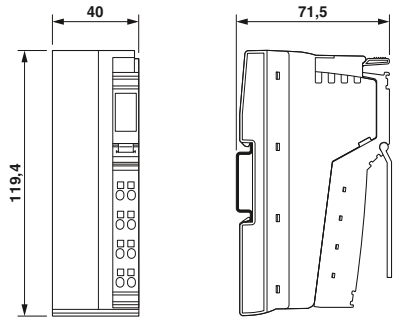

BK IO housing

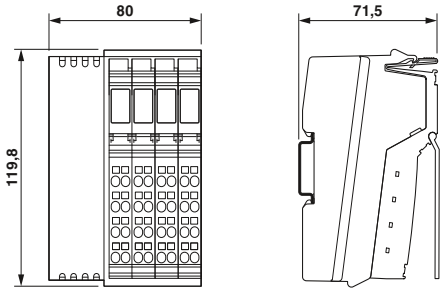

Container housing

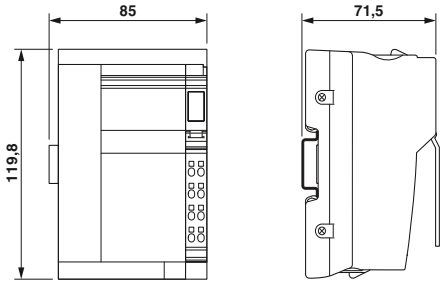

I/O terminals

Electronics base with standard and double signal connector

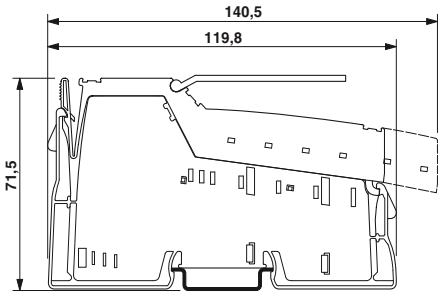

Electronics base with shield plug

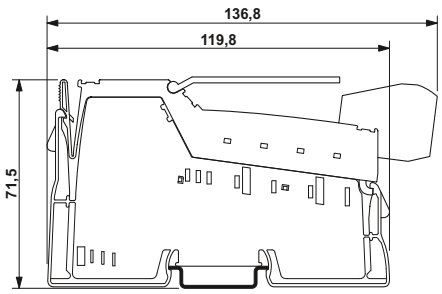

Terminal widths

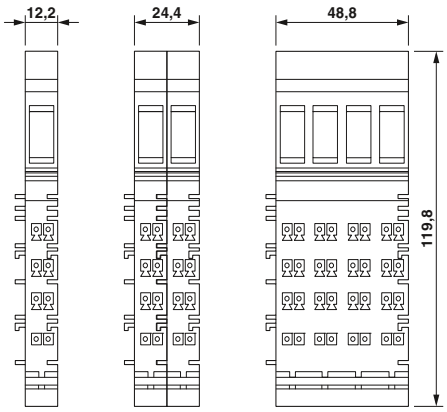

Bus couplers

The Inline bus couplers are the link between the Inline I/O system and the higher-level network.

Features:
– Up to 63 terminals (maximum of 16 PCP devices) can be connected

EtherCAT® features:
– Automatic addressing
– Station mapped as a modular EtherCAT® device using the Modular Device Profile (MDP)
– Acyclic data communication with mailbox protocols
– SafetyBridge V3 supported
– Firmware can be updated

EtherNet/IP™ features:
– Version 1.2
– Web-based management

Modbus/TCP (UDP) features:
– Auto negotiation
– Autocrossing
– Software interfaces for access via TCP/IP:
  - Device Driver Interface (DDI)
  - High-Level Language Fieldbus Interface (HFI)
– Web-based management

Sercos® features:
– Sercos specification V1.1.2
– Minimum Sercos cycle time of 250 µs
– FSP-IO (Function Specific Profile-IO) for modular I/O devices
– Maximum of 6 real-time connections

RJ45 connection

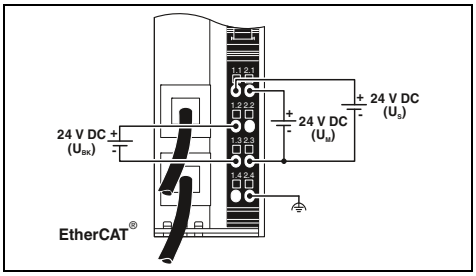

Technical data

Interface		
Fieldbus system		EtherCAT®
Connection method		RJ45 socket
Transmission speed		100 Mbps (full duplex)
Local bus interface		
Connection method		Inline data jumper
Number of local bus devices that can be connected		max. 63
Power supply for module electronics		
Supply voltage		24 V DC (via Inline connector)
Supply voltage range		19.2 V DC ... 30 V DC (including all tolerances, including ripple)
Max. current consumption		0.9 A
Power supply at U_L		max. 0.8 A
Power supply at U_{ANA}		max. 0.5 A DC
Digital inputs		
Connection technology		-
Number of inputs		-
Description of the inputs		-
Typical response time		-
Protective circuit		-
Digital outputs		
Connection technology		-
Number of outputs		-
Maximum output current per channel		-
Protective circuit		-
General data		
Connection method		Spring-cage connection
Connection data rigid / flexible / AWG		0.08 ... 1.5 mm² / 0.08 ... 1.5 mm² / 28 - 16
Dimensions	W / H / D	40 mm / 119.4 mm / 71.5 mm
Ambient temperature (operation)		-25°C ... 55°C
EMC note		Class A product, see page 527

Ordering data

Description	Type	Order No.	Pcs./Pkt.
Bus coupler, complete with accessories (connector and marking field) - For extended temperature range of -40°C ... +70°C	**IL EC BK-PAC**	2702507	1

Accessories

Connector	**IB IL SCN-PWR IN-CP**	2727637	10

EtherNet/IP

RJ45 connection,
8 digital inputs and 4 digital outputs

Ex:

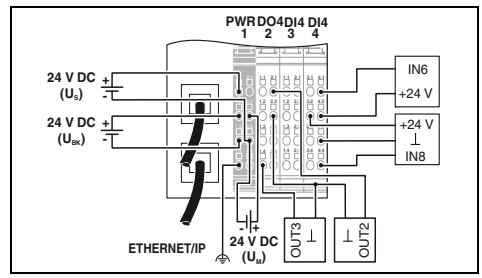

Technical data

EtherNet/IP™ RJ45 socket 10/100 Mbps (half or full duplex (automatic detection))
Inline data jumper max. 61 (on board I/Os are two devices)
24 V DC (via Inline connector) 19.2 V DC ... 30 V DC (including all tolerances, including ripple) 0.98 A max. 0.8 A DC max. 0.5 A DC
3-conductor 8 EN 61131-2 type 1 approx. 500 µs Reverse polarity protection
3-conductor 4 500 mA Short-circuit and overload protection
Spring-cage connection 0.08 ... 1.5 mm² / 0.08 ... 1.5 mm² / 28 - 16 80 mm / 119.8 mm / 71.5 mm -25°C ... 60°C Class A product, see page 527

Ordering data

Type	Order No.	Pcs./Pkt.
IL EIP BK DI8 DO4 2TX-PAC	2897758	1
IL EIP BK DI8 DO4 2TX-XC-PAC	2702131	1

Accessories

IL BKDIO-PLSET	2878599	1

Modbus/TCP (UDP)

RJ45 connection,
8 digital inputs and 4 digital outputs

Ex:

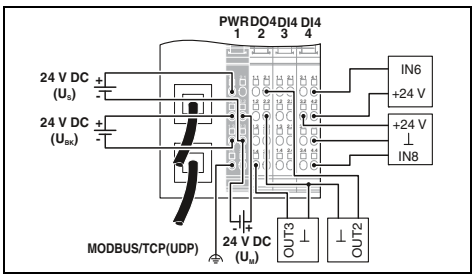

Technical data

Modbus/TCP (UDP) RJ45 socket 10/100 Mbps
Inline data jumper max. 61 (on board I/Os are two devices)
24 V DC (via Inline connector) 19.2 V DC ... 30 V DC (including all tolerances, including ripple) 0.98 A max. 0.8 A DC max. 0.5 A DC
3-conductor 8 EN 61131-2 type 1 approx. 500 µs Reverse polarity protection
3-conductor 4 500 mA Short-circuit and overload protection
Spring-cage connection 0.08 ... 1.5 mm² / 0.08 ... 1.5 mm² / 28 - 16 80 mm / 119.8 mm / 71.5 mm -25°C ... 55°C Class A product, see page 527

Ordering data

Type	Order No.	Pcs./Pkt.
IL ETH BK DI8 DO4 2TX-PAC	2703981	1
IL ETH BK DI8 DO4 2TX-XC-PAC	2701388	1

Accessories

IB IL SCN-8-CP	2727608	10

sercos
the automation bus

RJ45 connection,
8 digital inputs and 4 digital outputs

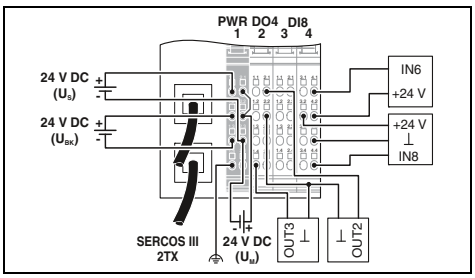

Technical data

Sercos RJ45 socket 100 Mbps
Inline data jumper max. 61 (on board I/Os are two devices)
24 V DC (via Inline connector) 19.2 V DC ... 30 V DC (including all tolerances, including ripple) 1.05 A max. 0.8 A DC max. 0.5 A DC
3-conductor 8 EN 61131-2 type 1 approx. 500 µs Reverse polarity protection
3-conductor 4 500 mA Short-circuit and overload protection
Spring-cage connection 0.08 ... 1.5 mm² / 0.08 ... 1.5 mm² / 28 - 16 80 mm / 119.8 mm / 71.5 mm -25°C ... 60°C Class A product, see page 527

Ordering data

Type	Order No.	Pcs./Pkt.
IL S3 BK DI8 DO4 2TX-PAC	2692380	1

Accessories

IL BKDIO-PLSET	2878599	1

Bus couplers

new

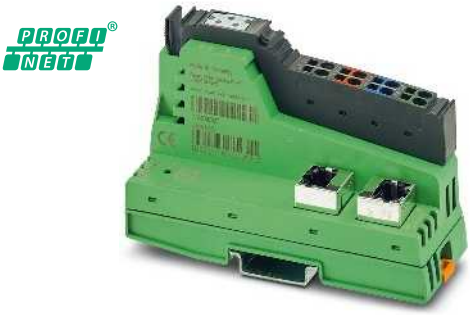

RJ45 connection

The Inline bus couplers are the link between the Inline I/O system and the higher-level network.

Features:
- Up to 63 terminals (maximum of 16 PCP devices) can be connected

PROFINET features:
- Conformance with PROFINET specification V2.3
- 2 RJ45 or 2 SC-RJ connections
- IP parameters can be set via PROFINET controller
- Electrical isolation between Ethernet interface and logic
- Automatic data rate detection in the local bus (500 kbps or 2 Mbps)
- Automatic speed detection of the system bus

Additional features of IL PN BK-PAC:
- Support for 3 branch terminals as remote bus branch (4 levels)
- Compact station structure, thanks to 40 mm housing width, saves space in the control cabinet

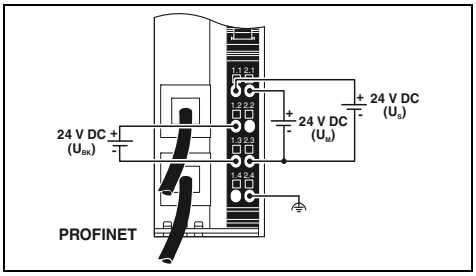

Technical data

Interface		
Fieldbus system		PROFINET
Connection method		RJ45 socket, auto negotiation
Transmission speed		100 Mbps (in acc. with PROFINET standard)
Local bus interface		
Connection method		Inline data jumper
Number of local bus devices that can be connected		max. 63
Power supply for module electronics		
Supply voltage		24 V DC
Supply voltage range		19.2 V DC ... 30 V DC (via Inline connector)
Max. current consumption		0.91 A DC
Power supply at U_L		max. 0.8 A DC
Power supply at U_{ANA}		max. 0.5 A DC
Digital inputs		
Connection technology		-
Number of inputs		-
Description of the inputs		-
Typical response time		-
Protective circuit		-
Digital outputs		
Connection technology		-
Number of outputs		-
Maximum output current per channel		-
Protective circuit		-
General data		
Connection method		Spring-cage connection
Connection data rigid / flexible / AWG		0.8 ... 1.5 mm² / 0.8 ... 1.5 mm² / 28 - 16
Dimensions	W / H / D	40 mm / 119.4 mm / 71.5 mm
Ambient temperature (operation)		-25°C ... 55°C (observe derating)
EMC note		

Ordering data

Description	Type	Order No.	Pcs./Pkt.
PROFINET bus coupler, complete with accessories (connector and marking field)	**IL PN BK-PAC**	2403696	1

Accessories

Connector	**IB IL SCN-PWR IN-CP**	2727637	10

RJ45 connection,
8 digital inputs and 4 digital outputs

Ex:

SC-RJ connection,
8 digital inputs and 4 digital outputs

Ex:

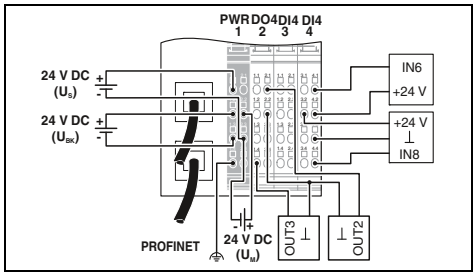

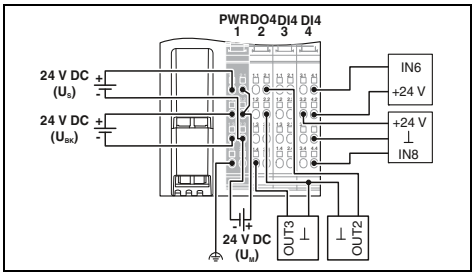

Technical data

PROFINET
RJ45 socket, auto negotiation
100 Mbps (in acc. with PROFINET standard)

Inline data jumper
max. 61 (on board I/Os are two devices)

24 V DC
19.2 V DC ... 30 V DC (via Inline connector)

0.91 A DC
max. 0.8 A DC (observe derating)
max. 0.5 A DC (observe derating)

2-, 3-conductor
8
EN 61131-2 type 1
approx. 500 µs
Reverse polarity protection

2-, 3-conductor
4
500 mA
Short-circuit and overload protection

Spring-cage connection
0.08 ... 1.5 mm² / 0.08 ... 1.5 mm² / 28 - 16
80 mm / 119.8 mm / 71.5 mm
-25°C ... 55°C (observe derating)
Class A product, see page 527

Ordering data

Type	Order No.	Pcs./Pkt.
IL PN BK DI8 DO4 2TX-PAC	2703994	1

Accessories

IL BKDIO-PLSET	2878599	1

Technical data

PROFINET
SC-RJ socket
100 Mbps (in acc. with PROFINET standard)

Inline data jumper
max. 61 (on board I/Os are two devices)

24 V DC (via Inline connector)
19.2 V DC ... 30 V DC (including all tolerances, including ripple)

0.83 A DC
max. 0.8 A DC (observe derating)
max. 0.5 A DC (observe derating)

3-conductor
8
EN 61131-2 type 1
approx. 500 µs
Reverse polarity protection

3-conductor
4
500 mA
Short-circuit and overload protection

Spring-cage connection
0.08 ... 1.5 mm² / 0.08 ... 1.5 mm² / 28 - 16
80 mm / 119.8 mm / 71.5 mm
-25°C ... 55°C (observe derating)
Class A product, see page 527

Ordering data

Type	Order No.	Pcs./Pkt.
IL PN BK DI8 DO4 2SCRJ-PAC	2878379	1

Accessories

IL BKDIO-PLSET	2878599	1

Bus couplers

The Inline bus couplers are the link between the Inline I/O system and the higher-level network.

Features:
– Up to 63 terminals (maximum of 16 PCP devices) can be connected

CANopen® features:
– Address can be set via DIP switches or software
– Supports two SDO servers simultaneously
– Trigger modes: event, timer, remote request
– Node and life guarding
– Heartbeat

Features of INTERBUS:
– Remote bus connections in copper or FO technology
– Electrical isolation of the remote bus segments
– Automatic configuration of the outgoing interface as a remote bus or local bus interface
– Support for up to 15 connected terminals with remote bus branch

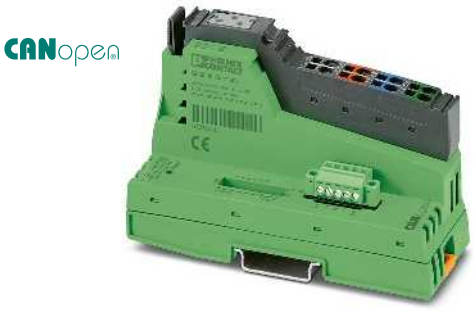

MINI COMBICON connection

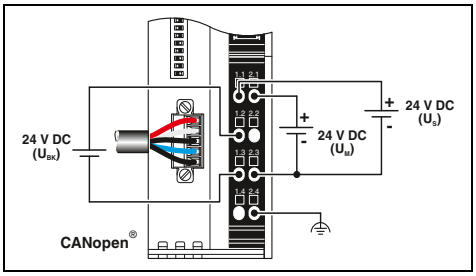

Technical data

Interface		
Fieldbus system		CANopen®
Connection method		MINI COMBICON
Transmission speed		1 Mbps, 800 kbps, 500 kbps, 250 kbps, 125 kbps, 50 kbps, 20 kbps, 10 kbps (can be set via DIP switch or automatic detection)
Local bus interface		
Connection method		Inline data jumper
Number of local bus devices that can be connected		max. 63
Maximum distance to the next remote bus device		-
Power supply for module electronics		
Supply voltage		24 V DC (via Inline connector)
Supply voltage range		19.2 V DC ... 30 V DC (including all tolerances, including ripple)
Max. current consumption		0.9 A
Power supply at U_L		max. 0.8 A
Power supply at U_{ANA}		max. 0.5 A DC
General data		
Connection method		Spring-cage connection
Connection data rigid / flexible / AWG		0.08 ... 1.5 mm² / 0.08 ... 1.5 mm² / 28 - 16
Dimensions	W / H / D	40 mm / 119.4 mm / 71.5 mm
Ambient temperature (operation)		-25°C ... 55°C
EMC note		Class A product, see page 527

Ordering data

Description	Type	Order No.	Pcs./Pkt.
Bus coupler, complete with accessories (connector and marking field)			
	IL CO BK-PAC	2702230	1
- For extended temperature range of -40°C ... +70°C	**IL CO BK-XC-PAC**	2702635	1
- 45° angled fiber optic connection			
- FO connection and FO remote bus branch			

Accessories

Connector	**IB IL SCN-PWR IN-CP**	2727637	10

Inline shield connector connection

D-SUB connection

45° angled fiber optic connection

Ex:

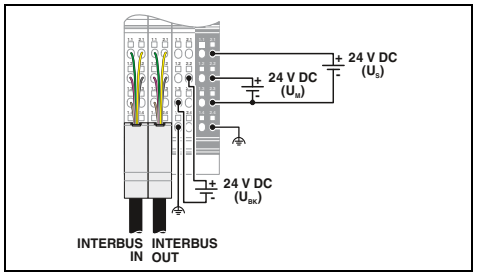

Technical data

INTERBUS
Inline shield connector
500 kbps

Inline data jumper
max. 63
400 m

24 V DC (via Inline connector)
19.2 V DC ... 30 V DC (including all tolerances, including ripple)

1.25 A
max. 2 A DC (observe derating)
max. 0.5 A DC (observe derating)

Spring-cage connection
0.08 ... 1.5 mm² / 0.08 ... 1.5 mm² / 28 - 16
48.8 mm / 135 mm / 71.5 mm
-25°C ... 55°C
Class A product, see page 527

Ordering data

Type	Order No.	Pcs./Pkt.
IBS IL 24 BK-T/U-PAC	2861580	1
IBS IL 24 BK-T/U-XC-PAC	2701150	1

Accessories

IB IL BK-PLSET/CP	2860374	1

Ex:

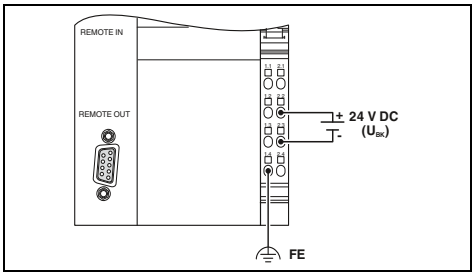

Technical data

INTERBUS
D-SUB-9 female/D-SUB-9 male
500 kbps

Inline data jumper
max. 63
400 m

24 V DC (via Inline connector)
19.2 V DC ... 30 V DC (including all tolerances, including ripple)

1.25 A
max. 2 A DC (observe derating)
max. 0.5 A DC (observe derating)

Spring-cage connection
0.08 ... 1.5 mm² / 0.08 ... 1.5 mm² / 28 - 16
85 mm / 119.8 mm / 71.5 mm
-25°C ... 55°C
Class A product, see page 527

Ordering data

Type	Order No.	Pcs./Pkt.
IBS IL 24 BK-DSUB-PAC	2861593	1

Accessories

IB IL SCN-8-CP	2727608	10

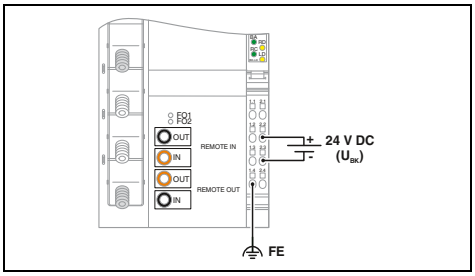

Technical data

	IBS IL 24 BK-LK/45-PAC	IBS IL 24 BK RB-LK-PAC
	INTERBUS F-SMA connector 500 kbps	
	Inline data jumper max. 63 400 m	
	24 V DC (via Inline connector) 19.2 V DC ... 30 V DC (including all tolerances, including ripple)	
	1.25 A	1.3 A
	max. 2 A DC (observe derating) max. 0.5 A DC (observe derating)	
	Spring-cage connection 0.08 ... 1.5 mm² / 0.08 ... 1.5 mm² / 28 - 16 85 mm / 119.8 mm / 71.5 mm -25°C ... 55°C Class A product, see page 527	

Ordering data

Type	Order No.	Pcs./Pkt.
IBS IL 24 BK-LK/45-PAC	2862165	1
IBS IL 24 BK RB-LK-PAC	2861506	1

Accessories

IB IL SCN-8-CP	2727608	10

Bus couplers

The Inline bus couplers are the link between the Inline I/O system and the higher-level network.

Bus coupler features:
– Up to 63 terminals (16 PCP devices) can be connected
– Address can be set via rotary coding or DIP switches

The **field multiplexer**, together with the connected I/O terminals, forms one station. A system consists of a station and remote station with complementary arrangement of the I/O terminals.

MUX features:
– Maximum of 32 terminals per station
– Up to 512 digital or 32 analog I/Os (or a mixture) can be connected

The digital and analog Inline I/O terminals which can be used on the field multiplexer are marked in this catalog with the adjacent logo.

Notes:

You will find a multiplexer application on an SD card for configuring two ILC 131 ETH modular small-scale controllers as multiplexers in this catalog on page 55

Modbus/RTU

D-SUB connection, 8 digital inputs and 4 digital outputs

Ex:

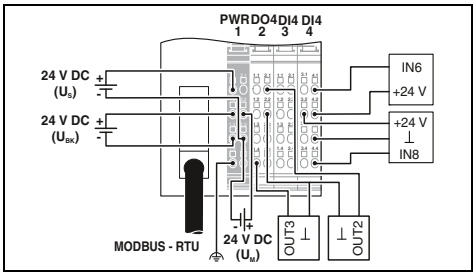

Technical data

Interface		
Fieldbus system		Modbus/RTU
Connection method		D-SUB-9 female connector
Transmission speed		1.2 kbps ... 115.2 kbps (can be parameterized)
Local bus interface		
Connection method		Inline data jumper
Number of local bus devices that can be connected		max. 61 (on board I/Os are two devices)
Power supply for module electronics		
Supply voltage		24 V DC (via Inline connector)
Supply voltage range		19.2 V DC ... 30 V DC (including all tolerances, including ripple)
Max. current consumption		0.98 A
Power supply at U_L		max. 0.8 A DC
Power supply at U_{ANA}		max. 0.5 A DC
Digital inputs		
Connection technology		3-conductor
Number of inputs		8
Description of the inputs		EN 61131-2 type 1
Typical response time		approx. 500 µs
Protective circuit		Reverse polarity protection
Digital outputs		
Connection technology		3-conductor
Number of outputs		4
Maximum output current per channel		500 mA
Protective circuit		Short-circuit and overload protection
General data		
Connection method		Spring-cage connection
Connection data rigid / flexible / AWG		0.08 ... 1.5 mm² / 0.08 ... 1.5 mm² / 28 - 16
Dimensions	W / H / D	80 mm / 119.8 mm / 71.5 mm
Ambient temperature (operation)		-25°C ... 60°C
EMC note		

Ordering data

Description	Type	Order No.	Pcs./Pkt.
Bus coupler, complete with accessories (connector and marking field) - For extended temperature range of -40°C ... +70°C	**IL MOD BK DI8 DO4-PAC**	2878696	1

Accessories

Connector set for bus coupler	**IL BKDIO-PLSET**	2878599	1
D-SUB connector, 9-pos. with two cable entries, termination resistor can be switched on via slide switch	**SUBCON-PLUS-MODBUS/IL/BK**	2310808	1
Adapter cable, Inline field multiplexer on PSI-MOS module			

D-SUB connection

D-SUB connection,
8 digital inputs and 4 digital outputs

Field multiplexer,
copper connection

Ex:

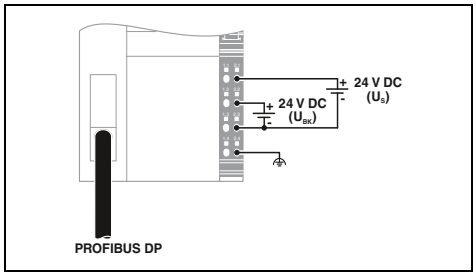

Ex:

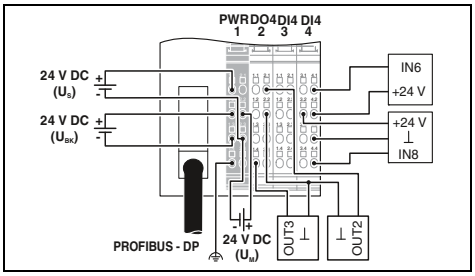

Ex:

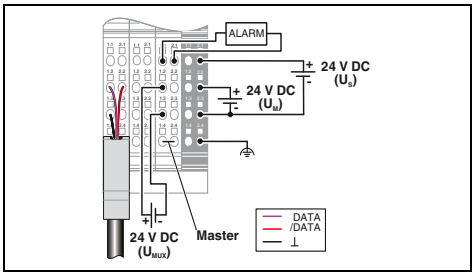

Technical data

PROFIBUS DP D-SUB-9 female connector 9.6 kbps ... 12 Mbps	PROFIBUS DP D-SUB-9 female connector 9.6 kbps ... 12 Mbps	RS-485 Inline shield connector -
Inline data jumper max. 63	Inline data jumper max. 61 (on board I/Os are two devices)	Inline data jumper 32 (without additional power terminal block, observe allowable total current consumption)
24 V DC (via Inline connector) 19.2 V DC ... 30 V DC (including all tolerances, including ripple)	24 V DC (via Inline connector) 19.2 V DC ... 30 V DC (including all tolerances, including ripple)	24 V DC (via Inline connector) 19.2 V DC ... 30 V DC (including all tolerances, including ripple)
1.25 A max. 2 A DC max. 0.5 A DC	0.98 A max. 0.8 A DC max. 0.5 A DC	1.25 A max. 2 A DC (observe derating) max. 0.5 A DC (observe derating)
- - - - -	3-conductor 8 EN 61131-2 type 1 approx. 500 µs Reverse polarity protection	- - - - -
- - - -	3-conductor 4 500 mA Short-circuit and overload protection	- - - -
Spring-cage connection 0.08 ... 1.5 mm² / 0.08 ... 1.5 mm² / 28 - 16 85 mm / 119.8 mm / 71.5 mm 0°C ... 55°C Class A product, see page 527	Spring-cage connection 0.08 ... 1.5 mm² / 0.08 ... 1.5 mm² / 28 - 16 80 mm / 119.8 mm / 71.5 mm -25°C ... 60°C	Spring-cage connection 0.08 ... 1.5 mm² / 0.08 ... 1.5 mm² / 28 - 16 48.8 mm / 135 mm / 71.5 mm -25°C ... 55°C Class A product, see page 527

Ordering data

Type	Order No.	Pcs./Pkt.
IL PB BK DP/V1-PAC	2862246	1

Accessories

IL BKDIO-PLSET	2878599	1
SUBCON-PLUS-PROFIB	2744348	1

Ordering data

Type	Order No.	Pcs./Pkt.
IL PB BK DI8 DO4/EF-PAC	2692322	1
IL PB BK DI8 DO4/EF-XC-PAC	2702132	1

Accessories

IL BKDIO-PLSET	2878599	1
SUBCON-PLUS-PROFIB	2744348	1

Ordering data

Type	Order No.	Pcs./Pkt.
IB IL 24 MUX MA-PAC	2861205	1

Accessories

IB IL MUX-CAB PSI	2878476	1

Power terminals

Inline power terminals are used to supply, protect, and diagnose the individual voltage routing within an Inline station.

Depending on the terminal type, various functions can be implemented.

Supply of:

– Main circuit (U_M) up to 8 A
– Segment circuit (U_S) for the I/O supply up to 8 A

The IB IL DOR LV-SET-PAC distance terminal set creates the specified creepage distance when using AC terminals (gray housing). For example, when using IB IL 24/230 DOR 4/W-PAC relay terminals, the two end terminals interrupt all 24 V circuits as well as GND and functional earth ground.

AC power terminals for 120 V AC or 230 V AC already include distance terminals.

24 V DC supply for U_M and U_S

Ex:

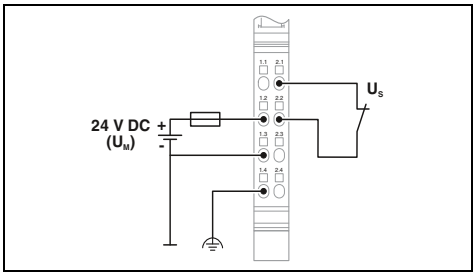

Technical data

Local bus interface		
Connection method		Inline data jumper
Power supply for module electronics		
Main circuit supply U_M		24 V DC (via Inline connector)
Supply voltage range U_M		19.2 V ... 30 V (including all tolerances, including ripple)
Power supply at U_M		max. 8 A (sum of $U_M + U_S$; 4 A, maximum, when used in potentially explosive areas.)
Communications power U_L		-
Current consumption from U_L		-
Segment circuit supply U_S		24 V DC (via Inline connector)
Power supply at U_S		max. 8 A (Sum of $U_M + U_S$; 4 A, maximum, when used in potentially explosive areas.)
I/O supply voltage		-
I/O supply voltage range		-
Fuse		-
General data		
Connection data rigid / flexible / AWG		0.08 ... 1.5 mm² / 0.08 ... 1.5 mm² / 28 - 16
Connection method		Spring-cage connection
Protective circuit		Surge protection Suppressor diode
Weight		59 g
Dimensions	W / H / D	12.2 mm / 119.8 mm / 71.5 mm
Ambient temperature (operation)		-25°C ... 55°C
EMC note		

Ordering data

Description	Type	Order No.	Pcs./Pkt.
Inline power terminal, complete with accessories (connector and marking field)			
- With fuse	**IB IL 24 PWR IN-PAC**	2861331	1
- For extended temperature range of -40°C ... +70°C	**IB IL 24 PWR IN-XC-PAC**	2701161	1
- With fuse and diagnostics			
- With fuse and fuse diagnostics			

Accessories

Inline distance terminal			

24 V DC supply for U_M and U_S, with fuse and diagnostics

120 V AC supply for U_L

230 V AC supply for U_L, with fuse and diagnostics as an option

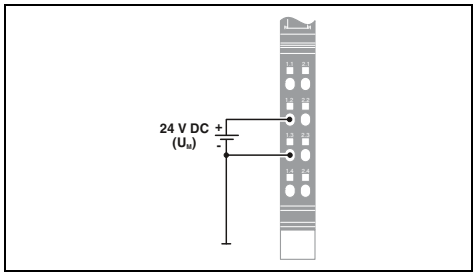

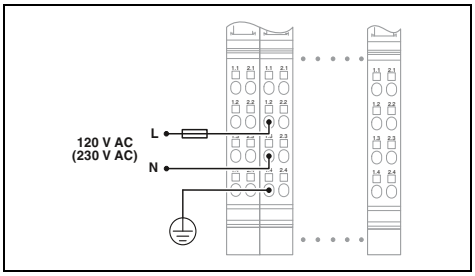

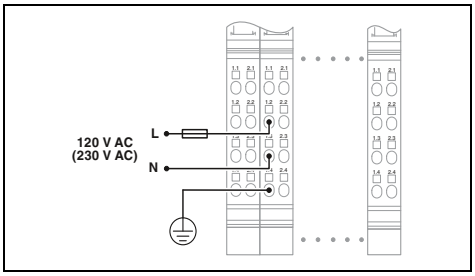

Technical data

IB IL 24 PWR IN/2-F-PAC	IB IL 24 PWR IN/2-F-D-PAC
Inline data jumper	
24 V DC (via Inline connector)	
19.2 V ... 30 V (including all tolerances, including ripple)	
max. 6 A (sum of $U_M + U_S$)	max. 6.3 A (sum of $U_M + U_S$; 4 A, maximum, when used in potentially explosive areas.)
-	7.5 V DC (via voltage jumper)
-	max. 25 mA
24 V DC (via Inline connector)	24 V DC
max. 6 A (sum of $U_M + U_S$)	max. 6.3 A (sum of $U_M + U_S$; 4 A, maximum, when used in potentially explosive areas.)
-	
-	
SI 5 x 20 6, 300 AT (in scope of delivery)	
0.08 ... 1.5 mm² / 0.08 ... 1.5 mm² / 28 - 16	
Spring-cage connection	
Polarity protection, surge protection	Surge protection Suppressor diode
59 g	
12.2 mm / 119.8 mm / 71.5 mm	
-25°C ... 55°C	
Class A product, see page 527	

Ordering data

Type	Order No.	Pcs./Pkt.
IB IL 24 PWR IN/2-F-PAC	2862136	1
IB IL 24 PWR IN/2-F-XC-PAC	2701162	1
IB IL 24 PWR IN/2-F-D-PAC	2862152	1
IB IL 24 PWR IN/2F-DF-PAC	2863779	1

Accessories

Technical data

Inline data jumper
-
-
-
-
-
-
-
120 V AC (via Inline connector)
108 V AC ... 135 V AC
-
0.08 ... 1.5 mm² / 0.08 ... 1.5 mm² / 28 - 16
Spring-cage connection
Surge protection
80 g
36.6 mm / 119.8 mm / 71.5 mm
-25°C ... 55°C
Class A product, see page 527

Ordering data

Type	Order No.	Pcs./Pkt.
IB IL 120 PWR IN-PAC	2861454	1

Accessories

IB IL DOR LV-SET-PAC	2861645	1

Technical data

IB IL 230 PWR IN-PAC	IB IL 230 PWR IN/F-D-PAC
Inline data jumper	
-	
-	
-	
-	7.5 V DC (via voltage jumper)
-	max. 25 mA
-	
-	
230 V AC (via Inline connector)	
207 V AC ... 253 V AC	
-	
0.08 ... 1.5 mm² / 0.08 ... 1.5 mm² / 28 - 16	
Spring-cage connection	
Surge protection	-
80 g	
36.6 mm / 119.8 mm / 71.5 mm	
-25°C ... 55°C	
Class A product, see page 527	

Ordering data

Type	Order No.	Pcs./Pkt.
IB IL 230 PWR IN-PAC	2861535	1
IB IL 230 PWR IN/F-D-PAC	2878971	1

Accessories

IB IL DOR LV-SET-PAC	2861645	1

Boost terminal

The IB IL 24 PWR IN/R-PAC Inline boost terminal is used to boost the following voltages:
– Main circuit (U_M) up to 8 A
– Segment circuit (U_S) for the I/O supply up to 8 A
– Analog supply (U_{ANA}) up to 0.5 A
– Communications power (U_L) up to 2 A

Boost for U_M, U_S, U_L, U_{ANA}

Ex:

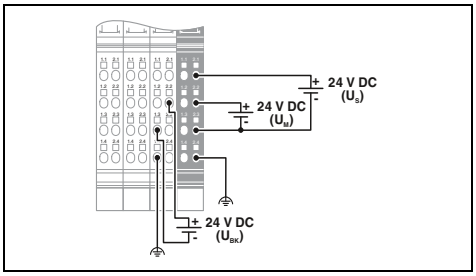

Technical data

Local bus interface	
Connection method	Inline data jumper
Power supply for module electronics	
Main circuit supply U_M	24 V DC (via Inline connector)
Supply voltage range U_M	19.2 V DC ... 30 V DC (including all tolerances, including ripple)
Power supply at U_M	max. 8 A (sum of U_M + U_S; 4 A, maximum, when used in potentially explosive areas.)
Communications power U_L	7.5 V DC (via voltage jumper)
Power supply at U_L	max. 2 A DC
I/O supply voltage U_{ANA}	24 V DC
Power supply at U_{ANA}	max. 0.5 A DC
Segment circuit supply U_S	24 V DC (via Inline connector)
Supply voltage range U_S	19.2 V DC ... 30 V DC (including all tolerances, including ripple)
Power supply at U_S	max. 8 A DC (sum of U_M + U_S; 4 A, maximum, when used in potentially explosive areas.)
Fuse	electrical/thermal overload protection, included in scope of delivery
General data	
Connection data rigid / flexible / AWG	0.08 ... 1.5 mm² / 0.08 ... 1.5 mm² / 28 - 16
Connection method	Spring-cage connection
Protective circuit	Surge protection (segment supply, main supply, 24 V supply) Input protective diodes (can be destroyed by permanent overload) Pulse loads up to 1500 W are short circuited by the input protective diode.
Weight	192 g
Dimensions W / H / D	48.8 mm / 119.8 mm / 71.5 mm

Ordering data

Description	Type	Order No.	Pcs./Pkt.
Inline power terminal or **boost terminal,** complete with accessories (connector and marking field)			
	IB IL 24 PWR IN/R-PAC	2861674	1
- For extended temperature range of -40°C ... +70°C	**IB IL 24 PWR IN/R-XC-PAC**	2701298	1

Accessories

Connector set, for power terminal, color-coded	**IB IL PWR IN/R-PLSET**	2860620	1

Boost terminal

The IB IL 24 PWR IN/R/L-0.8A-PAC Inline boost terminal is used to boost the following voltage:
– Communications power (U_L) up to 0.8 A

Boost for U_L

Ex:

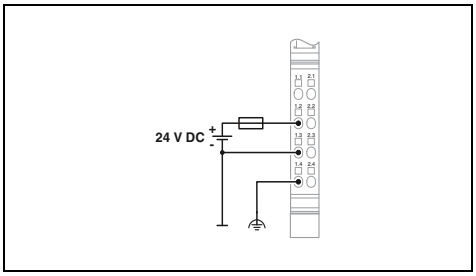

Technical data

Local bus interface		
Connection method		Inline data jumper
Power supply for module electronics		
Communications power U_L		7.5 V DC (via voltage jumper)
Power supply at U_L		max. 0.8 A DC
Fuse		electrical/thermal overload protection, included in scope of delivery
General data		
Connection data rigid / flexible / AWG		0.08 ... 1.5 mm² / 0.08 ... 1.5 mm² / 28 - 16
Connection method		Spring-cage connection
Protective circuit		Surge protection Input protective diodes (can be destroyed by permanent overload) Pulse loads up to 1500 W are short circuited by the input protective diode.
Weight		65 g
Dimensions	W / H / D	12.2 mm / 119.8 mm / 71.5 mm

Ordering data

Description	Type	Order No.	Pcs./Pkt.
Inline boost terminal, complete with accessories (connector and marking field) - For communications power U_L of 0.8 A	**IB IL 24 PWR IN/R/L-0.8A-PAC**	2693020	1

Accessories

Connector	**IB IL SCN-PWR IN-CP**	2727637	10

Segment terminals

Inline segment terminals can be used to create several segment circuits (U_S) within the main circuit (U_M). The signal and initiator voltages for digital I/Os are always tapped from the segment circuit U_S.

Depending on the terminal type, various functions can be implemented:
– Segmentation without fuse
– Segmentation with fine fuse
– Segmentation with fine fuse and diagnostics
– Segmentation with electronic fuse and diagnostics

When combined with the IB IL PD 24V-PAC potential distributor terminal, 24 V supplies with electronic fuse protection and remote diagnostics can be provided in the field, for example. However, the potential distributor terminals are also suitable for the economical return wiring of sensor and actuator cables when using digital Inline terminals with 1-conductor connection technology.

24 V DC segment circuit supply U_S

Ex:

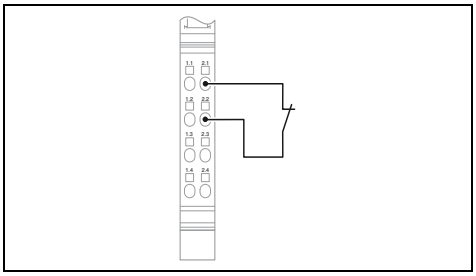

Technical data

Local bus interface		
Connection method		Inline data jumper
Power supply for module electronics		
Communications power U_L		-
Current consumption from U_L		-
Segment circuit supply U_S		24 V DC
Supply voltage range U_S		19.2 V DC ... 30 V DC (including all tolerances, including ripple)
Power supply at U_S		max. 8 A (nominal value)
Fuse		-
General data		
Connection data rigid / flexible / AWG		0.08 ... 1.5 mm² / 0.08 ... 1.5 mm² / 28 - 16
Connection method		Spring-cage connection
Protective circuit		Overload protection Fuse
Weight		42 g
Dimensions	W / H / D	12.2 mm / 119.8 mm / 71.5 mm
EMC note		Class A product, see page 527

Ordering data

Description	Type	Order No.	Pcs./Pkt.
Inline segment terminal, complete with accessories (connector and marking field) - With fuse - With fuse and diagnostics - For extended temperature range of -40°C ... +70°C	**IB IL 24 SEG-PAC**	**2861344**	1
Inline potential distributor terminal, complete with accessories (connector and marking field) - 24 V - GND			

24 V DC segment circuit supply U_S, with fuse and diagnostics

Ex:

24 V DC segment circuit supply U_S, with electronic fuse

Ex:

Potential distributor

U_M and U_S connected internally via fuse

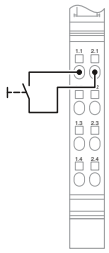

Button for resetting the fuse

U_M and U_S connected internally via fuse

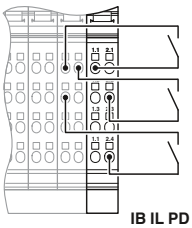

e.g. for single wire connection with IB IL 24 DI 32/HD

IB IL PD 24V-PAC

Technical data

Inline data jumper	
-	
-	
24 V DC	
19.2 V DC ... 30 V DC (including all tolerances, including ripple)	
max. 6 A (nominal value)	
SI 5 x 20 6, 300 AT (in scope of delivery)	
0.08 ... 1.5 mm² / 0.08 ... 1.5 mm² / 28 - 16	
Spring-cage connection	
Overload protection Fuse	
59 g	
12.2 mm / 119.8 mm / 71.5 mm	
Class A product, see page 527	

Ordering data

Type	Order No.	Pcs./Pkt.
IB IL 24 SEG/F-PAC	2861373	1
IB IL 24 SEG/F-D-PAC	2861904	1
IB IL 24 SEG/F-XC-PAC	2701163	1

Technical data

Inline data jumper	
7.5 V DC (via voltage jumper)	
max. 30 mA	
24 V DC	
19.2 V DC ... 30 V DC (including all tolerances, including ripple)	
max. 2.5 A (nominal value)	
2.5 A (electronic)	
0.08 ... 1.5 mm² / 0.08 ... 1.5 mm² / 28 - 16	
Spring-cage connection	
Overload protection	
44 g	
12.2 mm / 119.8 mm / 71.5 mm	
Class A product, see page 527	

Ordering data

Type	Order No.	Pcs./Pkt.
IB IL 24 SEG-ELF-PAC	2861409	1

Technical data

	IB IL PD 24V-PAC	IB IL PD GND-PAC
Inline data jumper		
-		
-		
24 V DC (via voltage jumper)		-
19.2 V DC ... 30 V DC (including all tolerances, including ripple)		-
-		
-		
0.08 ... 1.5 mm² / 0.08 ... 1.5 mm² / 28 - 16		
Spring-cage connection		
-		
44 g		
12.2 mm / 119.8 mm / 71.5 mm		
Class A product, see page 527		

Ordering data

Type	Order No.	Pcs./Pkt.
IB IL PD 24V-PAC	2862987	1
IB IL PD GND-PAC	2862990	1

Inline ECO

The Inline ECO terminals allow you to perform automation tasks easily and cost-effectively.

Following the principle of "one terminal, one function", you will always find the right function for your automation application in the range of Inline ECO terminals. No special terminal parameterization is required.

Inline ECO terminals are approved for the temperature range from 0°C to +55°C. The electronics base and Inline connector are supplied as standard.

Find out more with the web code

Detailed information on these products can be found on our website. Simply enter # and numbers in the search field.

Your web code: #1242

Can be freely combined

The Inline ECO terminals can be combined with all Inline terminals and Inline components.

No parameterization required

Every Inline ECO terminal is particularly easy to handle. You don't need to preset any parameters.

Functional safety in compact machines

Integrate the safe I/O terminal by simply plugging it into your Inline I/O station. Digital output terminals with approval for the safety-related segment circuit are then installed to the right of the safe I/O terminal.

When a sensor is activated, e.g., emergency stop, the actuator voltage supply for the connected output modules is shut down for safety reasons. Two dual-channel sensor circuits can be connected to one safe I/O terminal. All status and error messages are forwarded to the standard controller.

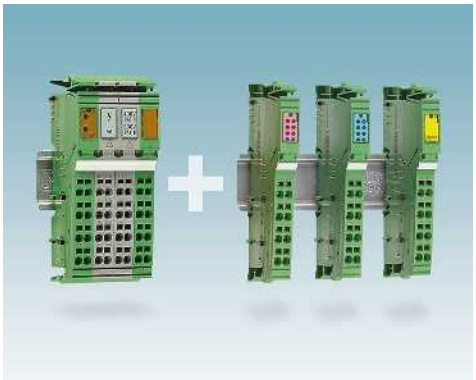

Can be freely combined

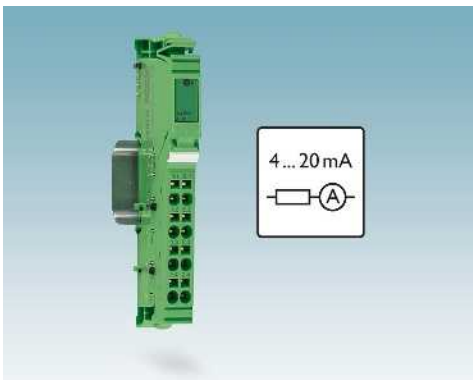

No parameterization required

Easy integration of network safety solutions

Inline ECO – Digital input and output terminals

The ECO digital input and output terminals are designed for use within an Inline station. They are used to acquire and output digital signals.

The IB IL 24 DO4/EF-ECO output terminal is approved for applications with a safety-related segment circuit.

Notes:

You can find an overview of the standard versions of all digital input and output terminals from page 122

8 digital inputs

4/8 digital outputs

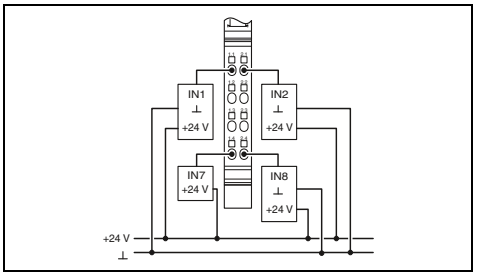

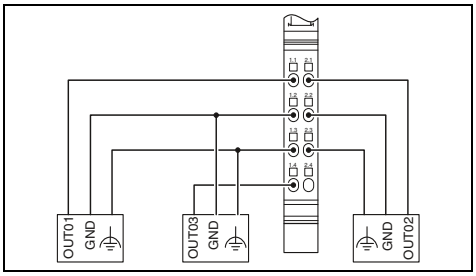

		Technical data	Technical data	
			IB IL 24 DO 4/EF-ECO	IB IL 24 DO 8/HD-ECO
Local bus interface				
Connection method		Inline data jumper	Inline data jumper	
Power supply for module electronics				
Communications power U_L		7.5 V DC (via voltage jumper)	7.5 V DC (via voltage jumper)	
Current consumption from U_L		max. 30 mA	max. 44 mA	max. 45 mA
Digital inputs				
Connection technology		1-conductor	-	
Number of inputs		8	-	
Description of the inputs		EN 61131-2 types 1 and 3	-	
Typical response time		1 ms	-	
Digital outputs				
Connection technology		-	3-conductor	1-conductor
Number of outputs		-	4	8
Maximum output current per channel		-	500 mA	
General data				
Connection method		Spring-cage connection	Spring-cage connection	
Connection data rigid / flexible / AWG		0.08 ... 1.5 mm² / 0.08 ... 1.5 mm² / 28 - 16	0.08 ... 1.5 mm² / 0.08 ... 1.5 mm² / 28 - 16	
Weight		60 g	60 g	
Dimensions	W / H / D	12.2 mm / 119.8 mm / 71.5 mm	12.2 mm / 119.8 mm / 71.5 mm	
Ambient temperature (operation)		0°C ... 55°C	0°C ... 55°C	
EMC note		Class A product, see page 527	Class A product, see page 527	

	Ordering data			Ordering data		
Description	Type	Order No.	Pcs./Pkt.	Type	Order No.	Pcs./Pkt.
Inline ECO digital input terminal (with connector)						
- 1-conductor connection technology	**IB IL 24 DI 8/HD-ECO**	2702792	1			
Inline ECO digital output terminal (with connector)						
- For the safety-related segment circuit				**IB IL 24 DO 4/EF-ECO**	2702825	1
- 1-conductor connection technology				**IB IL 24 DO 8/HD-ECO**	2702793	1

Inline ECO – Analog input and output terminals

The ECO analog input and output terminals are designed for use within an Inline station. They are used to acquire and output analog current and voltage signals.

Notes:

You can find an overview of the standard versions of all analog input and output terminals from page 134

4 analog inputs

4 analog outputs

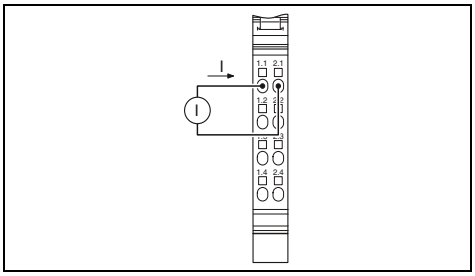

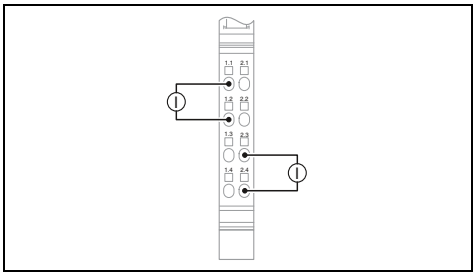

		Technical data		Technical data	
		IB IL AI 4/I/4-20-ECO	IB IL AI 4/U/0-10-ECO	IB IL AO 4/I/4-20-ECO	IB IL AO 4/U/0-10-ECO
Local bus interface					
Connection method		Inline data jumper		Inline data jumper	
Power supply for module electronics					
I/O supply voltage U_{ANA}		24 V DC		24 V DC	
Current consumption from U_{ANA}		max. 20 mA		max. 85 mA	max. 45 mA
Communications power U_L		7.5 V DC		7.5 V DC	
Current consumption from U_L		max. 70 mA		max. 50 mA	max. 70 mA
Analog inputs					
Connection technology		2-conductor		-	
Number of inputs		4		-	
Voltage input signal		-	0 V ... 10 V	-	
Current input signal		4 mA ... 20 mA	-	-	
Measured value representation		16 bits		-	
Process data update		< 10 ms		-	
Data formats		Standardized representation		-	
Analog outputs					
Connection technology		-		2-conductor	
Number of outputs		-		4	
Voltage output signal		-		-	0 V ... 10 V
Load/output load voltage output		-		-	> 2 kΩ
Current output signal		-		4 mA ... 20 mA	-
Load/output load current output		-		< 300 Ω	-
Protective circuit		-		Short-circuit and overload protection Transient protection	
Representation of output values		-		16 bits	
Process data update		-		< 10 ms	
Data formats		-		Standardized representation	
General data					
Connection method		Spring-cage connection		Spring-cage connection	
Connection data rigid / flexible / AWG		0.08 ... 1.5 mm² / 0.08 ... 1.5 mm² / 28 - 16		0.08 ... 1.5 mm² / 0.08 ... 1.5 mm² / 28 - 16	
Weight		60 g		60 g	
Dimensions	W / H / D	12.2 mm / 119.8 mm / 71.5 mm		12.2 mm / 119.8 mm / 71.5 mm	
Ambient temperature (operation)		0°C ... 55°C		0°C ... 55°C (see “Derating” table in the data sheet)	
EMC note		Class A product, see page 527		Class A product, see page 527	

	Ordering data			Ordering data		
Description	Type	Order No.	Pcs./Pkt.	Type	Order No.	Pcs./Pkt.
Inline ECO analog input terminal (with connector)						
- 4 mA ... 20 mA input signal	**IB IL AI 4/I/4-20-ECO**	2702495	1			
- 0 V ... 10 V input signal	**IB IL AI 4/U/0-10-ECO**	2702496	1			
Inline ECO analog output terminal (with connector)						
- 4 mA ... 20 mA output signal				**IB IL AO 4/I/4-20-ECO**	2702497	1
- 0 V ... 10 V output signal				**IB IL AO 4/U/0-10-ECO**	2702498	1

Inline ECO – Temperature measurement terminals

The ECO temperature measurement terminals are designed for use within an Inline station. They are used to connect resistive temperature sensors (Pt 100 and Pt 1000) or thermocouples (types J, K, L).

Notes:

You can find an overview of the standard versions of all temperature measurement terminals from page 140

4 RTD inputs

4 UTH inputs

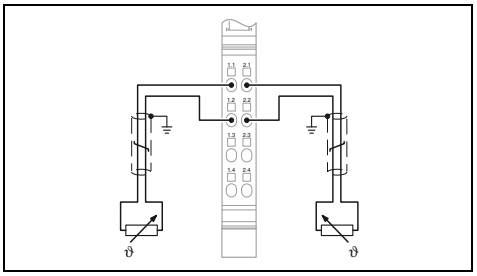

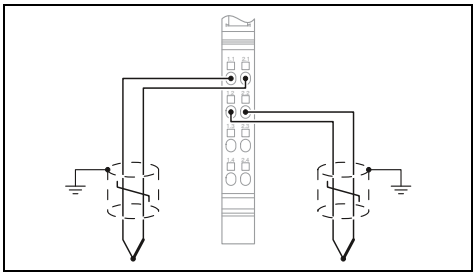

	Technical data		Technical data
	IB IL RTD 4/PT100-ECO	IB IL RTD 4/PT1000-ECO	
Local bus interface			
Connection method	Inline data jumper		Inline data jumper
Power supply for module electronics			
I/O supply voltage U_{ANA}	24 V DC		24 V DC
Current consumption from U_{ANA}	typ. 7.3 mA		typ. 32 mA
Communications power U_L	7.5 V DC		7.5 V DC
Current consumption from U_L	typ. 56 mA		typ. 38 mA
Analog inputs			
Connection technology	2-conductor		2-conductor
Number of inputs	4 (Pt 100)	4 (Pt 1000)	4 (type J)
Precision	-		typ. ± 1.9 K (reference junction)
Description of the input	Input for resistive temperature sensors		Differential inputs
Sensor types that can be used (RTD)	Pt 100 (IEC 60751/EN 60751)	Pt 1000 (IEC 60751/EN 60751)	-
Measuring principle	-		Sigma/Delta process
Process data update	< 10 ms		< 10 ms
General data			
Connection method	Spring-cage connection		Spring-cage connection
Connection data rigid / flexible / AWG	0.08 ... 1.5 mm² / 0.08 ... 1.5 mm² / 28 - 16		0.08 ... 1.5 mm² / 0.08 ... 1.5 mm² / 28 - 16
Weight	60 g		65 g
Dimensions W / H / D	12.2 mm / 119.8 mm / 71.5 mm		12.2 mm / 119.8 mm / 71.5 mm
EMC note	Class A product, see page 527		Class A product, see page 527

	Ordering data			Ordering data		
Description	Type	Order No.	Pcs./Pkt.	Type	Order No.	Pcs./Pkt.
Inline ECO analog input terminal (with connector)						
- For Pt 100 resistance temperature detectors	**IB IL RTD 4/PT100-ECO**	2702499	1			
- For Pt 1000 resistance temperature detectors	**IB IL RTD 4/PT1000-ECO**	2702501	1			
Inline ECO analog input terminal (with connector)						
- For thermocouple type J in accordance with DIN EN 60584-1				**IB IL UTH 4/J-ECO**	2702502	1
- For thermocouple type K in accordance with DIN EN 60584-1				**IB IL UTH 4/K-ECO**	2702503	1
- For thermocouple type L in accordance with DIN 43710				**IB IL UTH 4/L-ECO**	2702504	1

Inline ECO – Serial communication terminals

The ECO serial communication terminals are designed for use within an Inline station.

The IB IL RS 232-ECO terminal is used to operate standard I/O devices with serial RS-232 interfaces on a bus system.

Notes:

You can find an overview of the standard versions of all serial communication terminals from page 148

1 serial RS-232 interface

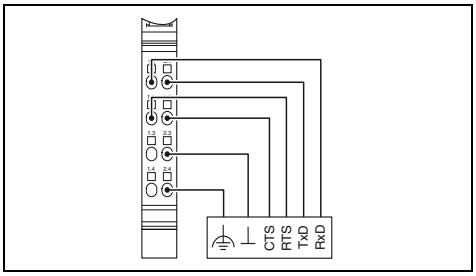

Technical data

Local bus interface		
Connection method		Inline data jumper
Serial port		
Interface		RS-232
Connection method		Spring-cage connection
Power supply for module electronics		
Communications power U_L		7.5 V
Current consumption from U_L		typ. 70 mA
Serial input/output channel		
Input buffer		4 kByte
Output buffer		1 kByte
Transmission speed		110 bps ... 38400 bps (configurable)
Data bits		6 ... 8
Stop bits		1 or 2
Parity		Even, odd or no parity
Transmission type		Transparent mode
General data		
Connection method		Spring-cage connection
Connection data rigid / flexible / AWG		0.08 ... 1.5 mm^2 / 0.08 ... 1.5 mm^2 / 28 - 16
Weight		60 g
Dimensions	W / H / D	12.2 mm / 119.8 mm / 71.5 mm
Ambient temperature (operation)		0°C ... 55°C

Ordering data

Description	Type	Order No.	Pcs./Pkt.
Inline ECO communication terminal (with connector)			
	IB IL RS 232-ECO	**2702795**	1

Inline ECO – Serial communication terminals

The ECO serial communication terminals are designed for use within an Inline station.

The IB IL RS 485-ECO terminal is used to operate standard I/O devices with serial RS-485 interfaces on a bus system.

Notes:

You can find an overview of the standard versions of all serial communication terminals from page 148

1 serial RS-485 interface

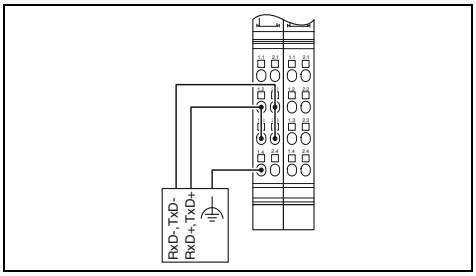

Technical data

Local bus interface		
Connection method		Inline data jumper
Serial port		
Interface		RS-485
Connection method		Spring-cage connection
Power supply for module electronics		
Communications power U_L		7.5 V
Current consumption from U_L		typ. 70 mA
Serial input/output channel		
Input buffer		4 kByte
Output buffer		1 kByte
Transmission speed		110 bps ... 38400 bps (configurable)
Data bits		6 ... 8
Stop bits		1 or 2
Parity		Even, odd or no parity
Transmission type		Transparent mode
General data		
Connection method		Spring-cage connection
Connection data rigid / flexible / AWG		0.08 ... 1.5 mm^2 / 0.08 ... 1.5 mm^2 / 28 - 16
Weight		62 g
Dimensions	W / H / D	12.2 mm / 119.8 mm / 71.5 mm
Ambient temperature (operation)		0°C ... 55°C

Ordering data

Description	Type	Order No.	Pcs./Pkt.
Inline ECO communication terminal (with connector)			
	IB IL RS 485-ECO	**2702141**	1

Digital input terminals

Digital Inline input terminals are designed to connect digital signals, such as those supplied by buttons, limit switches or proximity switches.

Features, depending on the selected device:

- 2 to 32-channel
- In acc. with EN 61131-2 Type 1 or 3
- 1-, 2-, 3- or 4-conductor connection technology
- Maximum permissible load current per sensor: 250 mA

2 inputs

4 inputs

Ex:

Ex:

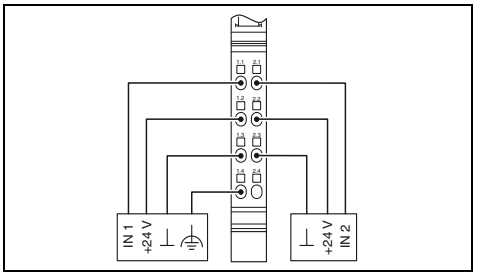

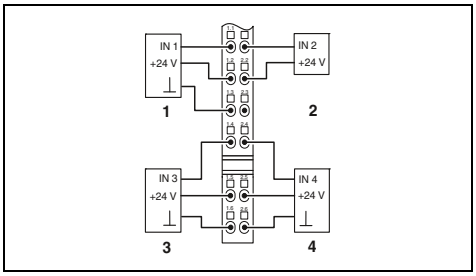

Technical data

Local bus interface		
Connection method	Inline data jumper	
Power supply for module electronics		
Communications power U_L	7.5 V DC (via voltage jumper)	
Current consumption from U_L	max. 35 mA	
Segment circuit supply U_S	24 V DC (via voltage jumper)	
Current consumption from U_S	max. 0.5 A	
Digital inputs		
Connection technology	4-conductor	
Number of inputs	2	
Description of the inputs	EN 61131-2 type 1	
Typical response time	< 1 ms	
General data		
Connection method	Spring-cage connection	
Connection data rigid / flexible / AWG	0.08 ... 1.5 mm² / 0.08 ... 1.5 mm² / 28 - 16	
Weight	53 g	
Dimensions W / H / D	12.2 mm / 119.8 mm / 71.5 mm	
EMC note	Class A product, see page 527	

Technical data

	IB IL 24 DI 4-PAC	IB IL 24 DI 4-ME
Local bus interface		
Connection method	Inline data jumper	
Power supply for module electronics		
Communications power U_L	7.5 V DC (via voltage jumper)	
Current consumption from U_L	max. 40 mA	
Segment circuit supply U_S	24 V DC (via voltage jumper)	
Current consumption from U_S	max. 1 A	
Digital inputs		
Connection technology	3-conductor	
Number of inputs	4	
Description of the inputs	EN 61131-2 type 1	
Typical response time	< 1 ms	
General data		
Connection method	Spring-cage connection	
Connection data rigid / flexible / AWG	0.08 ... 1.5 mm² / 0.08 ... 1.5 mm² / 28 - 16	
Weight	66 g	59 g
Dimensions W / H / D	12.2 mm / 140.5 mm / 71.5 mm	12.2 mm / 119.8 mm / 71.5 mm
EMC note		

Ordering data

Description	Type	Order No.	Pcs./Pkt.
Inline digital input terminal, complete with accessories (connector and marking field)			
- 1-conductor connection technology	**IB IL 24 DI 2-PAC**	2861221	1
- Machine Edition (ME version)			
- For extended temperature range of -40°C ... +70°C			

Ordering data

Type	Order No.	Pcs./Pkt.
IB IL 24 DI 4-PAC	2861234	1
IB IL 24 DI 4-ME	2863928	4
IB IL 24 DI 4-XC-PAC	2701152	1

Accessories

Connector set			
Connector set for IB IL DI 16, color-coded			
Inline connector	**IB IL SCN-8-CP**	2727608	10

Accessories

IB IL SCN-12-ICP	2727611	10

8 inputs

16 inputs

32 inputs

Ex:

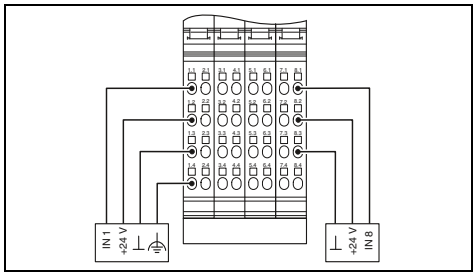

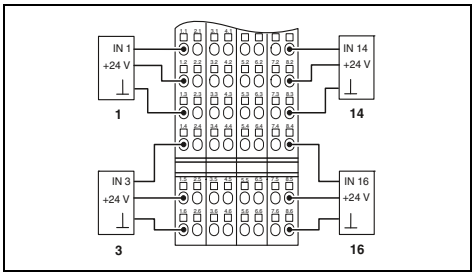

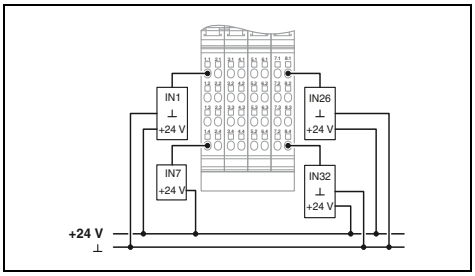

Technical data

IB IL 24 DI 8-PAC	IB IL 24 DI8/HD-PAC	
Inline data jumper		
7.5 V DC (via voltage jumper)		
max. 50 mA	max. 30 mA	
24 V DC (via voltage jumper)		
max. 2 A	max. 5.5 mA	
4-conductor	1-conductor	
8		
EN 61131-2 type 1	EN 61131-2 types 1 and 3	
< 1 ms	1 ms	
Spring-cage connection		
0.08 ... 1.5 mm² / 0.08 ... 1.5 mm² / 28 - 16		
118 g	60 g	
48.8 mm / 119.8 mm / 71.5 mm	12.2 mm / 119.8 mm / 71.5 mm	
Class A product, see page 527		

Ordering data

Type	Order No.	Pcs./Pkt.
IB IL 24 DI 8-PAC	2861247	1
IB IL 24 DI8/HD-PAC	2700173	1
IB IL 24 DI8/HD-XC-PAC	2701212	1

Accessories

IB IL SCN-8	2726337	10

Technical data

IB IL 24 DI 16-PAC	IB IL 24 DI 16-ME
Inline data jumper	
7.5 V DC (via voltage jumper)	7.5 V DC
max. 60 mA	
24 V DC (via voltage jumper)	
max. 4 A	
3-conductor	
16	
EN 61131-2 type 1	
< 1 ms	
Spring-cage connection	
0.08 ... 1.5 mm² / 0.08 ... 1.5 mm² / 28 - 16	
210 g	122 g
48.8 mm / 140.5 mm / 71.5 mm	48.8 mm / 119.8 mm / 71.5 mm
Class A product, see page 527	

Ordering data

Type	Order No.	Pcs./Pkt.
IB IL 24 DI 16-PAC	2861250	1
IB IL 24 DI 16-ME	2897156	4
IB IL 24 DI 16-XC-PAC	2701154	1

Accessories

IB IL DI16-PLSET/ICP	2860989	1

Technical data

Inline data jumper
7.5 V DC (via voltage jumper)
max. 90 mA
24 V DC (via voltage jumper)
max. 50 mA
1-conductor
32
EN 61131-2 type 1
2 ms
Spring-cage connection
0.08 ... 1.5 mm² / 0.08 ... 1.5 mm² / 28 - 16
185 g
48.8 mm / 119.8 mm / 71.5 mm
Class A product, see page 527

Ordering data

Type	Order No.	Pcs./Pkt.
IB IL 24 DI 32/HD-PAC	2862835	1

Accessories

IB IL DI/DO 8-PLSET	2860950	1

Digital input terminals

The digital Inline input terminals are used to acquire digital input signals. They are designed for use within an Inline station.

NPN terminal features:
– 2 to 32-channel

T2 terminal features:
– In accordance with EN 61131-2 Type 2

S0 terminal features:
– Connection of S0 pulse encoders
– 32-bit counter range

Pulse counter:
– Maximum counting frequency of up to 150 Hz

Operating hours counter:
– 1 s resolution
– Counter enabled on active or inactive input (configurable)

2 inputs, NPN-wired

16 inputs, NPN-wired

Ex:

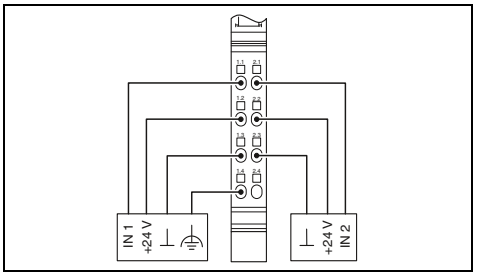

Ex:

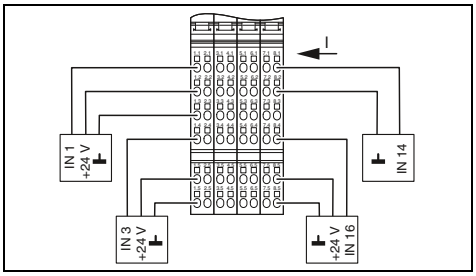

	Technical data	Technical data
Local bus interface		
Connection method	Inline data jumper	Inline data jumper
Power supply for module electronics		
Communications power U_L	7.5 V DC (via voltage jumper)	7.5 V DC (via voltage jumper)
Current consumption from U_L	max. 35 mA	max. 60 mA
Segment circuit supply U_S	24 V DC (via voltage jumper)	24 V DC (via voltage jumper)
Current consumption from U_S	max. 0.5 A	max. 4 A
Digital inputs		
Connection technology	4-conductor	3-conductor
Number of inputs	2 (NPN)	16 (NPN)
Description of the inputs	EN 61131-2 type 1	EN 61131-2 type 1
Typical response time	< 1 ms	< 1 ms
General data		
Connection method	Spring-cage connection	Spring-cage connection
Connection data rigid / flexible / AWG	0.08 ... 1.5 mm² / 0.08 ... 1.5 mm² / 28 - 16	0.08 ... 1.5 mm² / 0.08 ... 1.5 mm² / 28 - 16
Weight	53 g	210 g
Dimensions W / H / D	12.2 mm / 119.8 mm / 71.5 mm	48.8 mm / 140.5 mm / 71.5 mm
EMC note	Class A product, see page 527	Class A product, see page 527

Description	Ordering data: Type	Order No.	Pcs./Pkt.	Ordering data: Type	Order No.	Pcs./Pkt.
Inline digital input terminal, complete with accessories (connector and marking field) - NPN-wired - Input in acc. with EN 61131-2/Type 2 - S0 counter	**IB IL 24 DI 2-NPN-PAC**	2861483	1	**IB IL 24 DI 16-NPN-PAC**	2863520	1

	Accessories: Type	Order No.	Pcs./Pkt.	Accessories: Type	Order No.	Pcs./Pkt.
Connector set						
Inline connector	**IB IL SCN-8-CP**	2727608	10	**IB IL SCN-12-ICP**	2727611	10

32 inputs, NPN-wired

8 inputs, EN 61131-2/Type 2

8 S_0 counter inputs

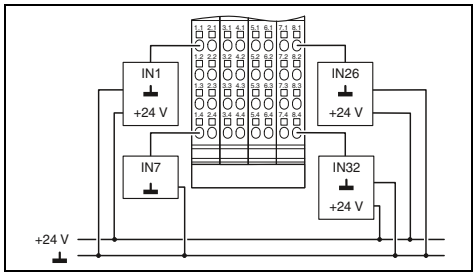

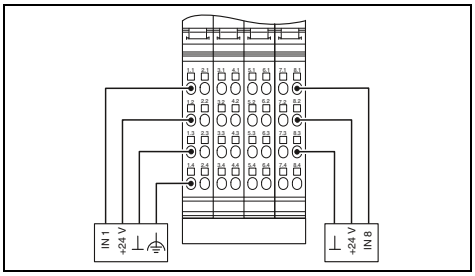

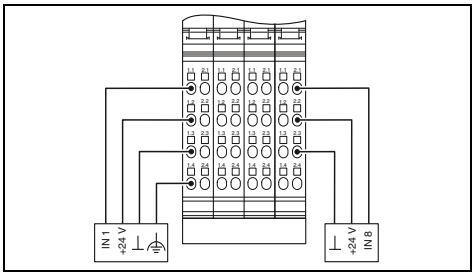

Technical data

Inline data jumper	
7.5 V DC (via voltage jumper) max. 90 mA 24 V DC (via voltage jumper) max. 100 mA	
1-conductor 32 (NPN) EN 61131-2 type 1 < 1 ms	
Spring-cage connection 0.08 ... 1.5 mm² / 0.08 ... 1.5 mm² / 28 - 16 185 g 48.8 mm / 119.8 mm / 71.5 mm Class A product, see page 527	

Ordering data

Type	Order No.	Pcs./Pkt.
IB IL 24 DI 32/HD-NPN-PAC	2878243	1

Accessories

IB IL DI/DO 8-PLSET	2860950	1

Technical data

Inline data jumper	
7.5 V DC (via voltage jumper) max. 50 mA 24 V DC (via voltage jumper) max. 2 A	
4-conductor 8 IEC 61131-2 Type 2 < 1 ms	
Spring-cage connection 0.08 ... 1.5 mm² / 0.08 ... 1.5 mm² / 28 - 16 118 g 48.8 mm / 119.8 mm / 71.5 mm Class A product, see page 527	

Ordering data

Type	Order No.	Pcs./Pkt.
IB IL 24 DI 8/T2-PAC	2862204	1

Accessories

IB IL SCN-8-CP	2727608	10

Technical data

Inline data jumper	
7.5 V DC (via voltage jumper) max. 55 mA 24 V DC (via voltage jumper) max. 2 A (incl. sensor supply)	
4-conductor 8 (S0 counter inputs) IEC 62053-31 and DIN 43864 -	
Spring-cage connection 0.08 ... 1.5 mm² / 0.08 ... 1.5 mm² / 28 - 16 183 g 48.8 mm / 119.8 mm / 71.5 mm Class A product, see page 527	

Ordering data

Type	Order No.	Pcs./Pkt.
IB IL DI 8/S0-PAC	2897020	1

Accessories

IB IL SCN-8-CP	2727608	10

Digital input terminals

The terminals are designed for use within an Inline station. They are used to acquire digital input signals in the 120 V AC or 230 V AC voltage range.

Features:

– Connections for one digital sensor
– Maximum permissible load current: 500 mA

1 input, 120 V

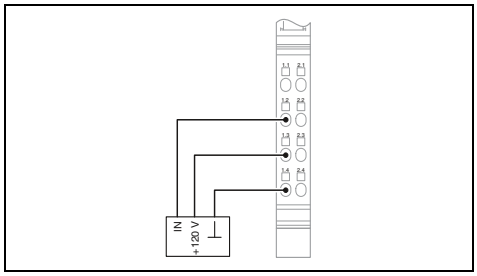

Technical data

Local bus interface		
Connection method		Inline data jumper
Power supply for module electronics		
Communications power U_L		7.5 V DC (via voltage jumper)
Current consumption from U_L		max. 30 mA
I/O supply voltage		120 V AC (via voltage jumper)
Digital inputs		
Connection technology		3-conductor
Number of inputs		1
Description of the inputs		IEC 61131-2 type 1
General data		
Connection method		Spring-cage connection
Connection data rigid / flexible / AWG		0.08 ... 1.5 mm^2 / 0.08 ... 1.5 mm^2 / 28 - 16
Weight		39 g
Dimensions	W / H / D	12.2 mm / 119.8 mm / 71.5 mm
EMC note		Class A product, see page 527

Ordering data

Description	Type	Order No.	Pcs./Pkt.
Inline digital input terminal, complete with accessories (connector and marking field) - 120 V AC - 230 V AC	**IB IL 120 DI 1-PAC**	2861917	1

Accessories

Inline distance terminal	**IB IL DOR LV-SET-PAC**	2861645	1

1 input, 230 V

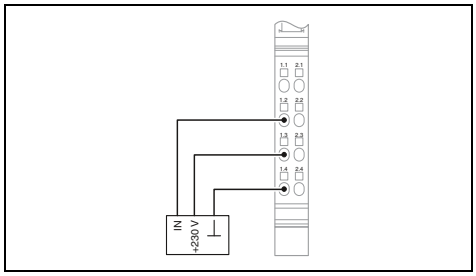

Technical data

Inline data jumper
7.5 V DC (via voltage jumper) max. 30 mA 230 V AC (via voltage jumper)
3-conductor 1 IEC 61131-2 type 1
Spring-cage connection 0.08 ... 1.5 mm² / 0.08 ... 1.5 mm² / 28 - 16 39 g 12.2 mm / 119.8 mm / 71.5 mm Class A product, see page 527

Ordering data

Type	Order No.	Pcs./Pkt.
IB IL 230 DI 1-PAC	**2861548**	1

Accessories

IB IL DOR LV-SET-PAC	**2861645**	1

Digital output terminals

The digital Inline output terminals are designed for the connection of digital actuators, such as electromagnetic valves, contactors or visual indicators.

Features, depending on the selected device:

– 2 to 32-channel
– Connection of actuators in 1-, 2-, 3-, and 4-conductor technology
– Nominal current per output: 500 mA
– Short-circuit and overload protected outputs

2 outputs

4 outputs

Ex:

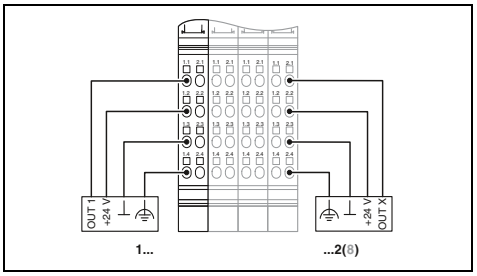

Ex:

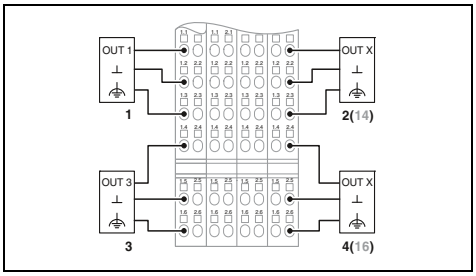

Technical data

		IB IL 24 DO 4-PAC / IB IL 24 DO 4-ME
Local bus interface		
Connection method	Inline data jumper	Inline data jumper
Power supply for module electronics		
Communications power U_L	7.5 V DC (via voltage jumper)	7.5 V DC (via voltage jumper)
Current consumption from U_L	max. 33 mA	max. 44 mA
Segment circuit supply U_S	24 V DC (via voltage jumper)	24 V DC (via voltage jumper)
Current consumption from U_S	max. 1 A	max. 2 A
Digital outputs		
Connection technology	4-conductor	3-conductor
Number of outputs	2	4
Maximum output current per channel	500 mA	500 mA
Protective circuit	Overload protection, short-circuit protection of outputs	Overload protection, short-circuit protection of outputs
General data		
Connection method	Spring-cage connection	Spring-cage connection
Connection data rigid / flexible / AWG	0.08 ... 1.5 mm² / 0.08 ... 1.5 mm² / 28 - 16	0.08 ... 1.5 mm² / 0.08 ... 1.5 mm² / 28 - 16
Weight	41 g	66 g / 59 g
Dimensions W / H / D	12.2 mm / 119.8 mm / 71.5 mm	12.2 mm / 140.5 mm / 71.5 mm / 12.2 mm / 119.8 mm / 71.5 mm
EMC note	Class A product, see page 527	

Ordering data

Description	Type	Order No.	Pcs./Pkt.	Type	Order No.	Pcs./Pkt.
Inline digital output terminal, complete with accessories (connector and marking field)						
	IB IL 24 DO 2-PAC	2861470	1	**IB IL 24 DO 4-PAC**	2861276	1
- 1-conductor connection technology						
- Machine Edition (ME version)				**IB IL 24 DO 4-ME**	2863931	4
- For extended temperature range of -40°C ... +70°C				**IB IL 24 DO 4-XC-PAC**	2701155	1

Accessories

Connector set						
Inline connector	**IB IL SCN-8-CP**	2727608	10	**IB IL SCN-12-OCP**	2727624	10

8 outputs

16 outputs

32 outputs

Ex:

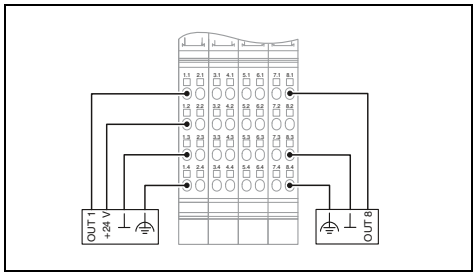

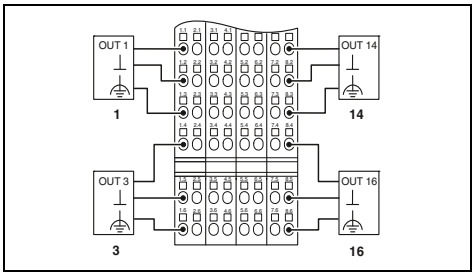

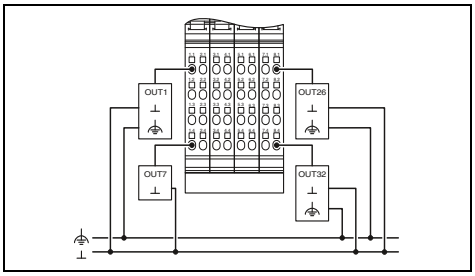

Technical data

IB IL 24 DO 8-PAC	IB IL 24 DO8/HD-PAC
Inline data jumper	
7.5 V DC (via voltage jumper)	
max. 60 mA	max. 45 mA
24 V DC (via voltage jumper)	
max. 4 A	
4-conductor	1-conductor
8	
500 mA	
Overload protection, short-circuit protection of outputs	
Spring-cage connection	
0.08 ... 1.5 mm² / 0.08 ... 1.5 mm² / 28 - 16	
130 g	60 g
48.8 mm / 119.8 mm / 71.5 mm	12.2 mm / 119.8 mm / 71.5 mm
Class A product, see page 527	

Ordering data

Type	Order No.	Pcs./Pkt.
IB IL 24 DO 8-PAC	2861289	1
IB IL 24 DO8/HD-PAC	2700172	1
IB IL 24 DO8/HD-XC-PAC	2701213	1

Accessories

IB IL SCN-8	2726337	10

Technical data

IB IL 24 DO 16-PAC	IB IL 24 DO 16-ME
Inline data jumper	
7.5 V DC (via voltage jumper)	
max. 90 mA	
24 V DC (via voltage jumper)	
max. 8 A	
3-conductor	
16	
500 mA	
Overload protection, short-circuit protection of outputs	
Spring-cage connection	
0.08 ... 1.5 mm² / 0.08 ... 1.5 mm² / 28 - 16	
218 g	190 g
48.8 mm / 140.5 mm / 71.5 mm	48.8 mm / 119.8 mm / 71.5 mm
Class A product, see page 527	

Ordering data

Type	Order No.	Pcs./Pkt.
IB IL 24 DO 16-PAC	2861292	1
IB IL 24 DO 16-ME	2897253	4
IB IL 24 DO 16-XC-PAC	2701156	1

Accessories

Technical data

IB IL 24 DO 32/HD-PAC
Inline data jumper
7.5 V DC (via voltage jumper)
max. 140 mA
24 V DC (via voltage jumper)
max. 8 A
1-conductor
32
500 mA
Overload protection, short-circuit protection of outputs
Spring-cage connection
0.08 ... 1.5 mm² / 0.08 ... 1.5 mm² / 28 - 16
195 g
48.8 mm / 119.8 mm / 71.5 mm
Class A product, see page 527

Ordering data

Type	Order No.	Pcs./Pkt.
IB IL 24 DO 32/HD-PAC	2862822	1

Accessories

IB IL DI/DO 8-PLSET	2860950	1

Digital output terminals

The terminals are designed for use within an Inline station. They are used to output digital signals.

NPN terminal features:
- NPN-wired
- 2 to 32-channel
- Connection of sensors in 1-, 2-, 3-, and 4-conductor technology
- Maximum permissible load current per actuator: 500 mA
- Short-circuit and overload protected outputs

2 A module features:
- 2 to 8-channel
- Connection of sensors in 2-, 3-, and 4-conductor technology
- Maximum permissible load current per actuator: 2 A
- Short-circuit and overload protected outputs

2 outputs, NPN-wired

Ex:

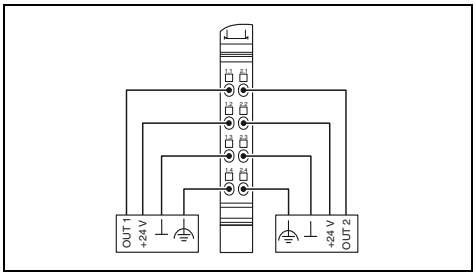

Technical data

Local bus interface		
Connection method		Inline data jumper
Power supply for module electronics		
Communications power U_L		7.5 V DC (via voltage jumper)
Current consumption from U_L		max. 32 mA
Segment circuit supply U_S		24 V DC (via voltage jumper)
Current consumption from U_S		max. 1 A
Digital outputs		
Connection technology		4-conductor
Number of outputs		2 (NPN)
Maximum output current per channel		500 mA
Protective circuit		Overload protection, short-circuit protection of outputs
General data		
Connection method		Spring-cage connection
Connection data rigid / flexible / AWG		0.08 ... 1.5 mm² / 0.08 ... 1.5 mm² / 28 - 16
Weight		42 g
Dimensions	W / H / D	12.2 mm / 119.8 mm / 71.5 mm
EMC note		Class A product, see page 527

Ordering data

Description	Type	Order No.	Pcs./Pkt.
Inline digital output terminal, complete with accessories (connector and marking field) - NPN-wired - Outputs 2 A - For extended temperature range of -40°C ... +70°C	**IB IL 24 DO 2-NPN-PAC**	2861496	1

Accessories

Connector set			
Inline connector	**IB IL SCN-8-CP**	2727608	10

32 outputs, NPN-wired

2 outputs, 2 A

8 outputs, 2 A

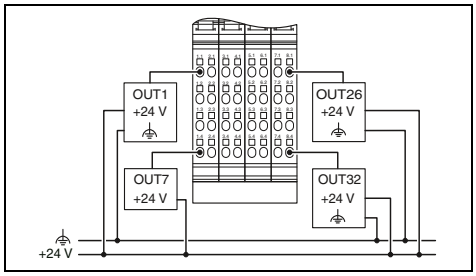

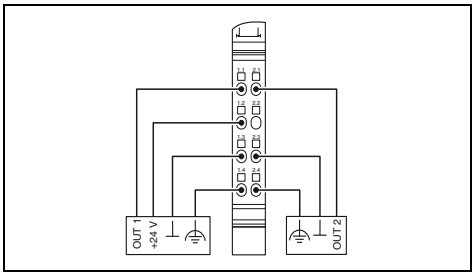

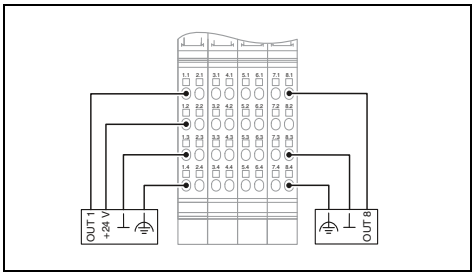

Technical data

Inline data jumper	
7.5 V DC (via voltage jumper) max. 140 mA 24 V DC (via voltage jumper) max. 8 A	
1-conductor 32 (NPN) 500 mA Overload protection, short-circuit protection of outputs	
Spring-cage connection 0.08 ... 1.5 mm² / 0.08 ... 1.5 mm² / 28 - 16 195 g 48.8 mm / 119.8 mm / 71.5 mm Class A product, see page 527	

Ordering data

Type	Order No.	Pcs./Pkt.
IB IL 24 DO 32/HD-NPN-PAC	2878340	1

Accessories

IB IL DI/DO 8-PLSET	2860950	1

Technical data

Inline data jumper	
7.5 V DC (via voltage jumper) max. 35 mA 24 V DC (via voltage jumper) max. 4 A	
4-conductor 2 2 A Overload protection, short-circuit protection of outputs	
Spring-cage connection 0.08 ... 1.5 mm² / 0.08 ... 1.5 mm² / 28 - 16 61 g 12.2 mm / 119.8 mm / 71.5 mm Class A product, see page 527	

Ordering data

Type	Order No.	Pcs./Pkt.
IB IL 24 DO 2-2A-PAC	2861263	1
IB IL 24 DO 2-2A-XC-PAC	2702133	1

Accessories

IB IL SCN-8-CP	2727608	10

Technical data

Inline data jumper	
7.5 V DC (via voltage jumper) max. 60 mA 24 V DC (via voltage jumper) max. 8 A	
4-conductor 8 2 A Overload protection, short-circuit protection of outputs	
Spring-cage connection 0.08 ... 1.5 mm² / 0.08 ... 1.5 mm² / 28 - 16 130 g 48.8 mm / 119.8 mm / 71.5 mm Class A product, see page 527	

Ordering data

Type	Order No.	Pcs./Pkt.
IB IL 24 DO 8-2A-PAC	2861603	1

Accessories

IB IL SCN-8-CP	2727608	10

Digital output terminals

Digital Inline output terminals are designed for the connection of digital actuators, such as electromagnetic valves, contactors or visual indicators.

Inline relay terminals make it possible to switch any I/O voltage up to a maximum of 230 V AC.

Differing relay contact materials ensure low contact resistance for small loads and lamp loads in the ...W versions, while the ...W/PC versions are designed for capacitive loads.

The IB IL 24/48 DOR 2/W-PAC module is a relay module for small signals.

1/4 outputs,
12 - 253 V AC

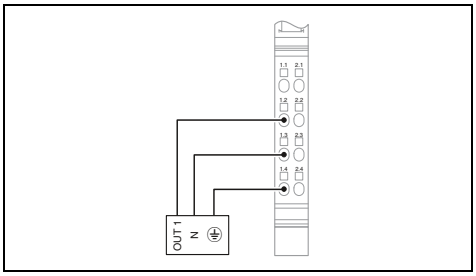

Technical data

		IB IL DO 1 AC-PAC	IB IL DO 4 AC-1A-PAC
Local bus interface			
Connection method		Inline data jumper	
Power supply for module electronics			
Communications power U_L		7.5 V DC (via voltage jumper)	
Current consumption from U_L		max. 35 mA	max. 45 mA
Digital outputs			
Connection technology		3-conductor	
Number of outputs		1	4
Maximum output current per channel		500 mA	1 A
General data			
Connection method		Spring-cage connection	
Connection data rigid / flexible / AWG		0.08 ... 1.5 mm^2 / 0.08 ... 1.5 mm^2 / 28 - 16	
Weight		45 g	130 g
Dimensions	W / H / D	12.2 mm / 119.8 mm / 71.5 mm	48.8 mm / 119.8 mm / 71.5 mm
EMC note		Class A product, see page 527	

Ordering data

Description	Type	Order No.	Pcs./Pkt.
Inline digital output terminal, complete with accessories (connector and marking field)			
- 1 output	**IB IL DO 1 AC-PAC**	**2861920**	1
- 4 outputs 1 A	**IB IL DO 4 AC-1A-PAC**	**2861658**	1
- 1 SPDT relay contact			
- 2 SPDT relay contacts			
- 4 SPDT relay contacts			
- 4 SPDT relay contacts, 10 A, high inrush current			
- For extended temperature range of -40°C ... +70°C			

Accessories

Inline distance terminal **Connector** for digital Inline terminals with AC voltage	**IB IL DOR LV-SET-PAC**	**2861645**	1

1/4 relay outputs,
5 - 253 V AC, gold contacts

1/4 relay outputs,
5 - 253 V AC

2 relay outputs,
5 - 50 V AC, 5 - 120 V DC

Ex:

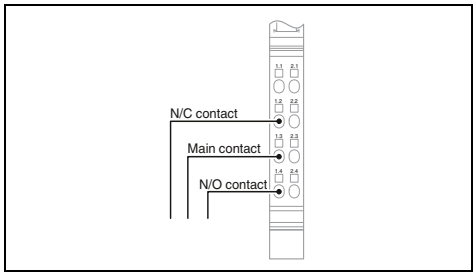

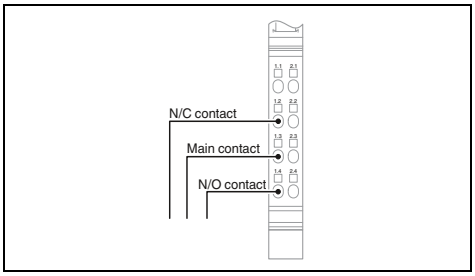

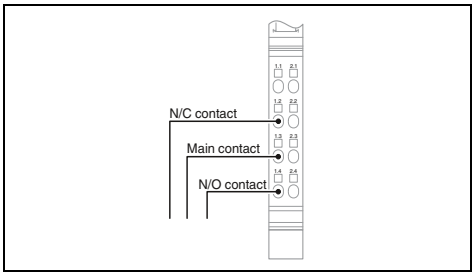

Technical data

IB IL 24/230 DOR1/W-PAC	IB IL 24/230 DOR4/W-PAC	
Inline data jumper		
7.5 V DC (via voltage jumper)		
max. 60 mA	max. 187 mA	
-		
1 (floating contacts)	4 (floating contacts)	
3 A		
Spring-cage connection		
0.08 ... 1.5 mm² / 0.08 ... 1.5 mm² / 28 - 16		
46 g	138 g	
12.2 mm / 119.8 mm / 71.5 mm	48.8 mm / 119.8 mm / 71.5 mm	
Class A product, see page 527		

Ordering data

Type	Order No.	Pcs./Pkt.
IB IL 24/230 DOR1/W-PAC	2861881	1
IB IL 24/230 DOR4/W-PAC	2861878	1
IB IL 24/230 DOR4/HC-PAC	2897716	1

Accessories

IB IL DOR LV-SET-PAC	2861645	1
IB IL SCN-8-AC-REL	2740290	10

Technical data

IB IL 24/230 DOR1/W-PC-PAC	IB IL 24/230 DOR4/W-PC-PAC
Inline data jumper	
7.5 V DC (via voltage jumper)	
max. 60 mA	max. 187 mA
-	
1 (floating contacts)	4 (floating contacts)
2.6 A	3 A
Spring-cage connection	
0.08 ... 1.5 mm² / 0.08 ... 1.5 mm² / 28 - 16	
61 g	138 g
12.2 mm / 119.8 mm / 71.5 mm	48.8 mm / 119.8 mm / 71.5 mm
Class A product, see page 527	

Ordering data

Type	Order No.	Pcs./Pkt.
IB IL 24/230 DOR1/W-PC-PAC	2862178	1
IB IL 24/230 DOR4/W-PC-PAC	2862181	1

Accessories

IB IL DOR LV-SET-PAC	2861645	1
IB IL SCN-8-AC-REL	2740290	10

Technical data

Inline data jumper
7.5 V DC (via voltage jumper)
max. 30 mA
-
2 (floating contacts)
2 A
Spring-cage connection
0.08 ... 1.5 mm² / 0.08 ... 1.5 mm² / 28 - 16
63 g
12.2 mm / 119.8 mm / 71.5 mm
Class A product, see page 527

Ordering data

Type	Order No.	Pcs./Pkt.
IB IL 24/48 DOR 2/W-PAC	2863119	1
IB IL 24/48 DOR 2/W-XC-PAC	2701214	1

Accessories

Analog input terminals

Inline analog input terminals are suitable for connecting standard sensors for acquiring current and voltage signals.

Terminals with 2, 4 or 8 channels are available.

Features:

- Single-ended and differential inputs
- Connection of sensors in 2- or 3-conductor technology
- Measured value acquisition with 13 or 16-bit resolution
- High level of measuring accuracy
- Excellent interference and common mode suppression
- Overload-protected current inputs
- Integrated short-circuit-proof sensor supply

2 inputs

Ex:

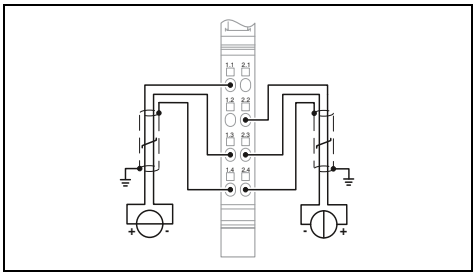

Technical data

		IB IL AI 2/SF-PAC	IB IL AI 2/SF-ME
Local bus interface			
Connection method		Inline data jumper	
Power supply for module electronics			
I/O supply voltage U_{ANA}		24 V DC	
Current consumption from U_{ANA}		max. 18 mA	
Communications power U_L		7.5 V DC	
Current consumption from U_L		max. 60 mA	
Analog inputs			
Connection technology		2-conductor	
Number of inputs		2	
Voltage input signal		0 V ... 10 V / -10 V ... 10 V	
Current input signal		0 mA ... 20 mA / 4 mA ... 20 mA / -20 mA ... 20 mA	
Process data			
Measured value resolution		16 bits (15 bits + sign bit)	13 bits (12 bits + sign bit)
Process data update		< 1.5 ms (the time includes the internal firmware runtime and the time for the analog-to-digital conversion. For system considerations (e.g., for the step response determination of sensors), please take into account additional times for latching and bus transmission as well as the status of mean-value generation.)	
Data formats		IB IL, IB ST, IB RT, standardized representation	
General data			
Connection method		Spring-cage connection	
Connection data rigid / flexible / AWG		0.08 ... 1.5 mm^2 / 0.08 ... 1.5 mm^2 / 28 - 16	
Weight		69 g	52 g
Dimensions	W / H / D	12.2 mm / 136.8 mm / 71.5 mm	12.2 mm / 119.8 mm / 71.5 mm
EMC note		Class A product, see page 527	

Ordering data

Description	Type	Order No.	Pcs./Pkt.
Inline analog input terminal, complete with accessories (connector and marking field)			
	IB IL AI 2/SF-PAC	2861302	1
- Machine Edition (ME version) - 8 inputs, initiator with supply outputs	**IB IL AI 2/SF-ME**	2863944	1
- For extended temperature range of -40°C ... +70°C	**IB IL AI 2/SF-XC-PAC**	2701157	1

Accessories

Shield connector	**IB IL SCN 6-SHIELD-TWIN**	2740245	5

4 inputs

8 inputs

8 inputs,
with initiator supply

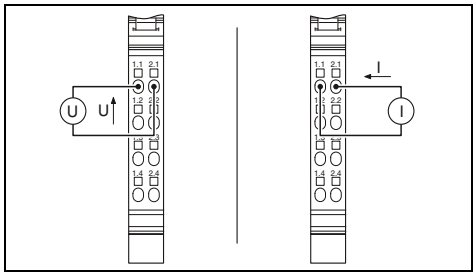

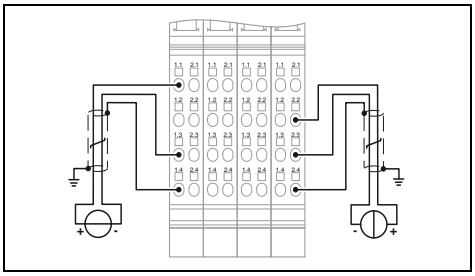

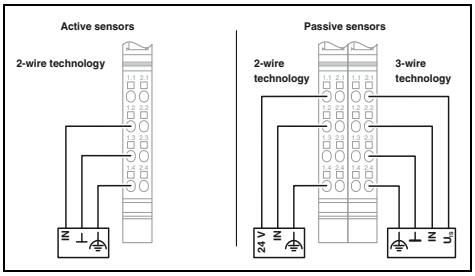

Technical data

IB IL AI 4/U-PAC	IB IL AI 4/I-PAC	
Inline data jumper		Inline data jumper
24 V DC max. 35 mA 7.5 V DC max. 60 mA		24 V DC max. 35 mA 7.5 V DC max. 55 mA
2-conductor 4 0 V ... 10 V / -10 V ... 10 V -	 - 0 mA ... 20 mA / 4 mA ... 20 mA	2-conductor 8 0 V ... 5 V / -5 V ... 5 V / 0 V ... 10 V / -10 V ... 10 V 0 mA ... 20 mA / 4 mA ... 20 mA / -20 mA ... 20 mA
12 bits (11 bits + sign bit)	13 bits (12 bits + sign bit)	16 bits (15 bits + sign bit)
typ. 250 µs (all channels)		bus-synchronous
IB IL, S7-compatible		IB IL, IB ST, IB RT, standardized representation, PIO format
Spring-cage connection 0.08 ... 1.5 mm² / 0.08 ... 1.5 mm² / 28 - 16 66 g 12.2 mm / 119.8 mm / 71.5 mm Class A product, see page 527		Spring-cage connection 0.08 ... 1.5 mm² / 0.08 ... 1.5 mm² / 28 - 16 213 g 48.8 mm / 136.8 mm / 71.5 mm Class A product, see page 527

Ordering data

Type	Order No.	Pcs./Pkt.
IB IL AI 4/U-PAC	2700459	1
IB IL AI 4/I-PAC	2700458	1

Accessories

Ordering data

Type	Order No.	Pcs./Pkt.
IB IL AI 8/SF-PAC	2861412	1
IB IL AI 8/SF-XC-PAC	2701159	1

Accessories

IB IL SCN 6-SHIELD-TWIN	2740245	5

Technical data

IB IL AI 4/U-PAC	IB IL AI 4/I-PAC	
Inline data jumper		Inline data jumper
24 V DC max. 35 mA 7.5 V DC max. 60 mA		24 V DC max. 40 mA 7.5 V DC max. 65 mA
2-conductor 4 0 V ... 10 V / -10 V ... 10 V -	 - 0 mA ... 20 mA / 4 mA ... 20 mA	2-, 3-conductor 8 - 0 mA ... 20 mA / 4 mA ... 20 mA / -20 mA ... 20 mA
12 bits (11 bits + sign bit)	13 bits (12 bits + sign bit)	16 bits (15 bits + sign bit)
typ. 250 µs (all channels)		bus-synchronous
IB IL, S7-compatible		IBS IL, IBS ST, IBS RT, standardized representation, PIO format
Spring-cage connection 0.08 ... 1.5 mm² / 0.08 ... 1.5 mm² / 28 - 16 66 g 12.2 mm / 119.8 mm / 71.5 mm Class A product, see page 527		Spring-cage connection 0.08 ... 1.5 mm² / 0.08 ... 1.5 mm² / 28 - 16 125 g 48.8 mm / 136.8 mm / 71.5 mm Class A product, see page 527

Ordering data

Type	Order No.	Pcs./Pkt.
IB IL AI 8/IS-PAC	2861661	1

Accessories

IB IL SCN 6-SHIELD-TWIN	2740245	5

Analog input terminals

The IB IL AI 4/EF (EF...Extended Functions) analog Inline terminal is suitable for connecting standard sensors for acquiring current and voltage signals.

Features:

- 4 differential signal inputs
- Connection of sensors in 2-, 3-, and 4-conductor technology
- Measured value acquisition with 16-bit resolution
- Sensor supply with channel-specific integrated short-circuit and overload protection
- Short update time of < 1 ms, maximum for all channels
- Bus-synchronous provision of input values with very low jitter (< 10 µs)

Notes:

The driver function blocks can be obtained free of charge on the Internet at phoenixcontact.net/products under Download on the product page of the corresponding module.

4 inputs, with extended functions

Ex:

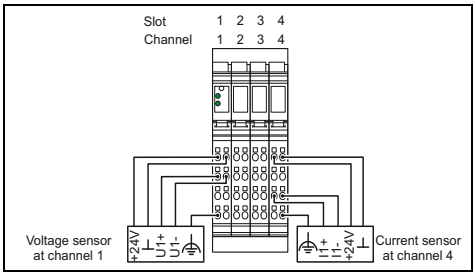

Technical data

Local bus interface	
Connection method	Inline data jumper
Power supply for module electronics	
I/O supply voltage U_{ANA}	24 V DC
Current consumption from U_{ANA}	max. 20 mA
Communications power U_L	7.5 V DC
Current consumption from U_L	max. 100 mA
Analog inputs	
Connection technology	2-, 3-, 4-conductor
Number of inputs	4
Description of the input	Differential input, including sensor supply (24 V DC)
Voltage input signal	0 V ... 5 V / -5 V ... 5 V / 0 V ... 10 V / -10 V ... 10 V
Current input signal	0 mA ... 20 mA / 4 mA ... 20 mA / -20 mA ... 20 mA
Process data	
Measured value resolution	16 bits (15 bits + sign bit)
Process data update	< 1 ms (bus-synchronous)
Data formats	IB IL, IB ST, standardized representation, S7 compatible
General data	
Connection method	Spring-cage connection
Connection data rigid / flexible / AWG	0.08 ... 1.5 mm^2 / 0.08 ... 1.5 mm^2 / 28 - 16
Weight	210 g
Dimensions W / H / D	48.8 mm / 135 mm / 71.5 mm

Ordering data

Description	Type	Order No.	Pcs./Pkt.
Inline analog input terminal, complete with accessories (connector and marking field)			
	IB IL AI 4/EF-PAC	2878447	1
- For extended temperature range of -40°C ... +70°C	**IB IL AI 4/EF-XC-PAC**	2701215	1

Accessories

Shield connector	**IB IL SCN 6-SHIELD-TWIN**	2740245	5

Analog input terminal with HART functionality

The Inline terminal offers the option of communicating with intelligent field devices using the standardized HART communication protocol.

It enables both analog and digital communication. The analog signal transmits the process information; the digital modulated signal also permits bidirectional communication with the HART-compatible sensor.

Features:

- Two differential signal inputs for current sensors
- Sensor connection with 2-conductor connection technology
- Measured value acquisition with 16-bit resolution
- Point-to-point and multi-drop connections possible
- Polling and burst modes
- A maximum of 5 HART devices can be connected per channel
- A hand-held operator panel can be connected
- FDT/DTM support

Notes:

The driver function blocks can be obtained free of charge on the Internet at phoenixcontact.net/products under Download on the product page of the corresponding module.

2 HART inputs

Ex:

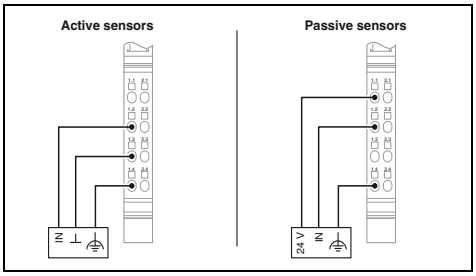

Technical data

Local bus interface		
Connection method		Inline data jumper
Power supply for module electronics		
I/O supply voltage U_{ANA}		24 V DC
Current consumption from U_{ANA}		max. 150 mA
Communications power U_L		7.5 V DC
Current consumption from U_L		max. 110 mA
Analog inputs		
Connection technology		2-conductor
Number of inputs		2
Current input signal		4 mA ... 20 mA / 0 mA ... 25 mA
Process data		
Measured value resolution		16 bits (15 bits + sign bit)
Process data update		typ. 1 ms (bus-synchronous)
Data formats		IB IL, standardized representation, PIO
General data		
Connection method		Spring-cage connection
Connection data rigid / flexible / AWG		0.08 ... 1.5 mm² / 0.08 ... 1.5 mm² / 28 - 16
Weight		134 g
Dimensions	W / H / D	48.8 mm / 135 mm / 71.5 mm
EMC note		Class A product, see page 527

Ordering data

Description	Type	Order No.	Pcs./Pkt.
Inline analog input terminal, complete with accessories (connector and marking field) - HART functionality	**IB IL AI 2-HART-PAC**	**2862149**	1

Accessories

Shield connector	**IB IL SCN 6-SHIELD-TWIN**	**2740245**	5

Strain gauge measurement terminals

Inline strain gauge measurement terminals enable the connection of load cells, force transducers, mass force transducers, and similar instruments, based on strain gauges.

IB IL SGI 2/F-PAC features:

– 2 fast inputs for strain gauge
– Bus-synchronous process data update with ≥ 1 ms (depending on the local bus cycle time)
– Typical deviation of the measuring range final value of ±0.1% (unipolar) or ±0.2% (bipolar)
– Optional: 16-sample mean-value generation

IB IL SGI 2/P/EF-PAC features:

– 2 high-precision and fast inputs for the strain gauges
– Typical deviation of the measuring range final value of ±0.01%
– Serial interface for external weight displays
– Zero point, tare, and standstill display
– Optional: 4, 16, and 32-sample mean-value generation

Notes:

The driver function blocks can be obtained free of charge on the Internet at phoenixcontact.net/products under Download on the product page of the corresponding module.

2 fast inputs

Ex:

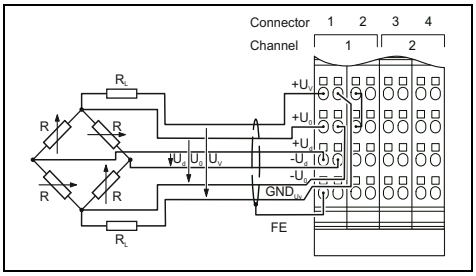

Technical data

Local bus interface		
Connection method		Inline data jumper
Power supply for module electronics		
I/O supply voltage U_{ANA}		24 V DC
Current consumption from U_{ANA}		typ. 32 mA (with maximum load of 58.3 Ω when U_V = 5 V)
Communications power U_L		7.5 V DC
Current consumption from U_L		max. 85 mA
Analog inputs		
Connection technology		6- or 4-wire, twisted pair shielded cable
Number of inputs		2
Description of the inputs		Input channels for strain gauge
Bridge difference U_d		Measuring range specified by selecting the characteristic and the bridge voltage
Bridge voltage U_0		3.3 V / 5 V
Analog outputs		
Description of the outputs		Voltage output
Number of outputs		2
Impedance		> 58.3 Ω (typical; permissible total resistance of the strain gauge)
Output current		typ. 55 mA (with U_V = 3.3 V) / typ. 85 mA (with U_V = 5 V)
Characteristics		
Unipolar		+1 mV/V, +2 mV/V, +3 mV/V, +4 mV/V
Bipolar		±1 mV/V, ±2 mV/V, ±3 mV/V, ±4 mV/V
Measured value representation		15 bits + sign bit
Process data update		1 x per local bus cycle at a bus cycle time ≥ 1 ms
General data		
Connection method		Spring-cage connection
Connection data rigid / flexible / AWG		0.08 ... 1.5 mm² / 0.08 ... 1.5 mm² / 28 - 16
Weight		190 g
Dimensions	W / H / D	48.8 mm / 136 mm / 71.5 mm
EMC note		Class A product, see page 527

Ordering data

Description	Type	Order No.	Pcs./Pkt.
Inline analog strain gauge input terminal, complete with accessories (connector and marking field) - Fast inputs - Fast and precise inputs	**IB IL SGI 2/F-PAC**	2878638	1

Accessories

Shield connector	**IB IL SCN 6-SHIELD-TWIN**	2740245	5

2 fast and precise inputs

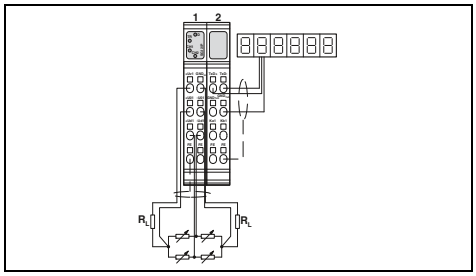

Technical data

Inline data jumper
24 V DC 32 mA (in case of typical load of 350 Ohm per channel) 7.5 V DC max. 95 mA
6- or 4-wire, twisted pair shielded cable 2 Input channels for strain gauge Measuring range specified by selecting the characteristic 5 V
Jumper supply 2 > 43 Ω (per channel) max. 115 mA (per channel)
- ±1 mV/V, ±2 mV/V, ±3 mV/V, ±3.33 mV/V, ±4 mV/V, ±5 mV/V, ±6 mV/V, manual characteristic value specification 16 bit, 20 bit, ASCII data record can be parameterized: 200 µs, 500 µs, 1 ms, 2 ms, 5 ms, 10 ms, 12.5 ms, 20 ms, 50 ms, 100 ms
Spring-cage connection 0.08 ... 1.5 mm^2 / 0.08 ... 1.5 mm^2 / 28 - 16 220 g 48.8 mm / 136 mm / 71.5 mm Class A product, see page 527

Ordering data

Type	Order No.	Pcs./Pkt.
IB IL SGI 2/P/EF-PAC	**2702373**	1

Accessories

IB IL SCN 6-SHIELD-TWIN	**2740245**	5

Temperature measurement terminals

These Inline terminals can be used to connect thermocouples (UTH) and resistive temperature sensors (RTD).

Features of UTH inputs:

- Connection of thermocouples in accordance with DIN EN 60584-1 and DIN 43710
- Absolute and differential temperature measurement
- Internal and external cold junction

Features of RTD inputs:

- Pt, Ni, Cu, KTY sensor types in accordance with DIN and SAMA

The IB IL 24 TC Inline thermistor terminal is used for the evaluation of PTC thermistors. It makes it possible to monitor the temperature of motors and can be used in conjunction with Inline motor starters.

Notes:

The driver function blocks can be obtained free of charge on the Internet at phoenixcontact.net/products under Download on the product page of the corresponding module.

8 inputs, UTH and RTD

2 UTH inputs

Ex:

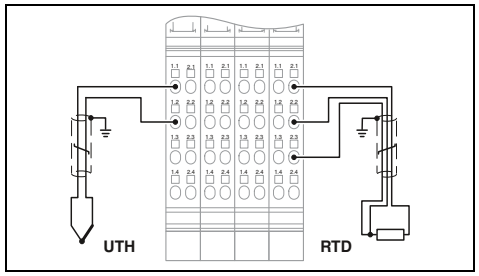

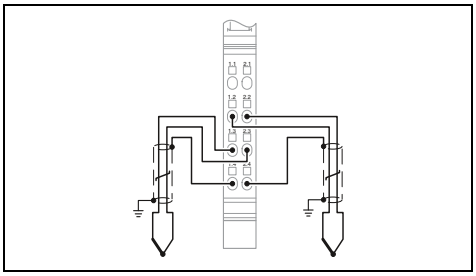

	Technical data	Technical data
Local bus interface		
Connection method	Inline data jumper	Inline data jumper
Power supply for module electronics		
I/O supply voltage U_{ANA}	24 V DC	24 V DC
Current consumption from U_{ANA}	typ. 24 mA	typ. 11 mA
Communications power U_L	7.5 V DC	7.5 V DC
Current consumption from U_L	typ. 90 mA	typ. 43 mA
Analog inputs		
Connection technology	2-, 3-conductor	2-conductor
Number of inputs	8	2 (thermocouples or linear voltage)
Precision	typ. ± 0.3 K (Pt 100 with 3-conductor connection)	typ. ± 0.6 K (sensor type K)
Description of the input	Temperature sensor inputs	Inputs for thermocouples or linear voltage
Linear resistance measuring range	-	-
Sensor types that can be used (RTD)	Pt, Ni sensors, linear resistors	-
Sensor types that can be used (TC)	B, C, E, J, K, L, N, R, S, T, U, mV input	U, T, L, J, E, K, N, S, R, B, C, W, HK
Measuring principle	Successive approximation	Successive approximation
Measured value representation	16 bits (15 bits + sign bit)	16 bits (15 bits + sign bit)
Process data update	20 ms (with filter time of 20 ms or 100 ms) 100 ms (with filter time of 400 ms or 1600 ms)	max. 30 ms (for both channels)
General data		
Connection method	Spring-cage connection	Spring-cage connection
Connection data rigid / flexible / AWG	0.08 ... 1.5 mm² / 0.08 ... 1.5 mm² / 28 - 16	0.08 ... 1.5 mm² / 0.08 ... 1.5 mm² / 28 - 16
Weight	188 g	67 g
Dimensions W / H / D	48.8 mm / 119.8 mm / 71.5 mm	12.2 mm / 136.8 mm / 71.5 mm
EMC note		Class A product, see page 527

Ordering data

Description	Type	Order No.	Pcs./Pkt.
Inline analog input terminal, complete with accessories (connector and marking field)			
- With extended functions	**IB IL TEMP 8 UTH/RTD-PAC**	2701000	1
- For extended temperature range of -40°C ... +70°C			
Accessories			
Shield connector	**IB IL SCN 6-SHIELD-TWIN**	2740245	5

Ordering data

Description	Type	Order No.	Pcs./Pkt.
Inline analog input terminal, complete with accessories (connector and marking field)			
- With extended functions	**IB IL TEMP 2 UTH-PAC**	2861386	1
- For extended temperature range of -40°C ... +70°C	**IB IL TEMP 2 UTH-XC-PAC**	2701216	1
Accessories			
Shield connector	**IB IL SCN 6-SHIELD-TWIN**	2740245	5

2 RTD inputs

4 or 8 RTD inputs

1 thermistor input

Ex:

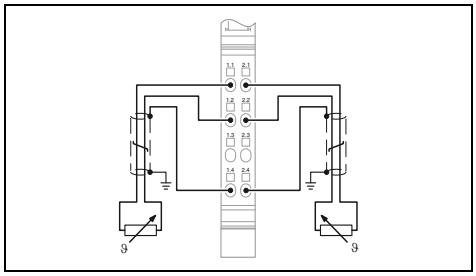

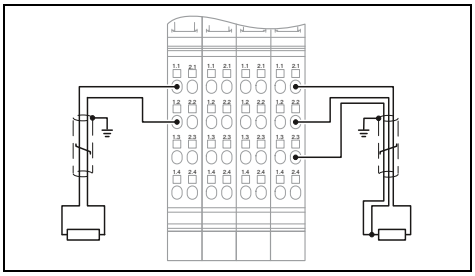

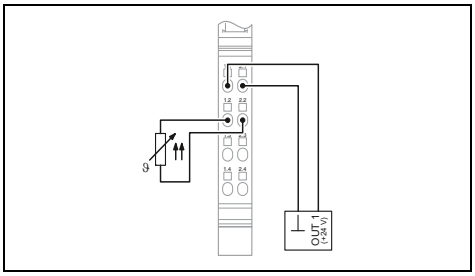

Technical data

	IB IL TEMP 4/8 RTD-PAC	IB IL TEMP 4/8 RTD/EF-PAC
Inline data jumper	Inline data jumper	
24 V DC max. 18 mA 7.5 V DC typ. 43 mA	24 V DC typ. 28 mA 7.5 V DC typ. 75 mA	 typ. 6 mA typ. 95 mA
2-, 3-, 4-conductor 2 typ. ± 0.26 K (Pt 100 with 3-conductor connection) Input for resistive temperature sensors 0 Ω ... 400 Ω / 0 Ω ... 4 kΩ Pt, Ni, KTY, Cu sensors, linear resistors - Successive approximation 16 bit two's complement 32 ms (both channels in 3-conductor technology) 20 ms (one channel in 2-conductor technology and one channel in 4-conductor technology) 20 ms (both channels in 2-conductor technology)	2, 3-conductor 8 typ. ± 0.5 K (Pt 100 with 3-conductor connection) Input for resistive temperature sensors 0 Ω ... 400 Ω / 0 Ω ... 20 kΩ Pt, Ni, KTY, Cu sensors, linear resistors - Successive approximation 16 bits (15 bits + sign bit) 6 ms (up to 230 ms possible depending on operating mode)	4-conductor 8 (for resistance temperature detectors) typ. ± 0.05 K (Pt 100 with 4-conductor connection) 0 Ω ... 500 Ω / 0 Ω ... 5 kΩ Sigma/Delta process 1.8 s (up to 3.3 s possible depending on operating mode)
Spring-cage connection 0.08 ... 1.5 mm² / 0.08 ... 1.5 mm² / 28 - 16 67 g 12.2 mm / 136.8 mm / 71.5 mm Class A product, see page 527	Spring-cage connection 0.08 ... 1.5 mm² / 0.08 ... 1.5 mm² / 28 - 16 190 g 48.8 mm / 136.8 mm / 71.5 mm Class A product, see page 527	 48.8 mm / 119.8 mm / 71.5 mm

Ordering data

Type	Order No.	Pcs./Pkt.
IB IL TEMP 2 RTD-PAC	2861328	1
IB IL TEMP 2 RTD-XC-PAC	2701217	1

Accessories

IB IL SCN 6-SHIELD-TWIN	2740245	5

Ordering data

Type	Order No.	Pcs./Pkt.
IB IL TEMP 4/8 RTD-PAC	2863915	1
IB IL TEMP 4/8 RTD/EF-PAC	2897402	1
IB IL TEMP 4/8 RTD-EF-XC-PAC	2701218	1

Accessories

IB IL SCN 6-SHIELD-TWIN	2740245	5

Technical data

Inline data jumper
24 V DC 0 A DC 7.5 V DC max. 60 mA
2-conductor 1 - Input for PTC thermistor 2.7 kΩ ... 3.5 kΩ (shutdown range, total resistance) / 50 Ω ... 2.25 kΩ (operating range, total resistance) PTC thermistor in accordance with DIN 44081 or DIN 44082 - - - -
Spring-cage connection 0.08 ... 1.5 mm² / 0.08 ... 1.5 mm² / 28 - 16 50 g 12.2 mm / 119.8 mm / 71.5 mm Class A product, see page 527

Ordering data

Type	Order No.	Pcs./Pkt.
IB IL 24 TC-PAC	2861360	1

Accessories

IB IL SCN-6 SHIELD	2726353	5

Analog output terminals

These Inline terminals are used in applications in which analog actuators are to be controlled.

With these terminals, common current and voltage output ranges can be configured individually and channel-specifically.

Features:

- Connection of sensors in 2-conductor technology
- Measured value output with 16-bit resolution
- Load of up to 500 Ω
- Bipolar outputs
- Short-circuit-proof current outputs
- Short update time of < 1 ms

Notes:

The driver function blocks can be obtained free of charge on the Internet at phoenixcontact.net/products under Download on the product page of the corresponding module.

1 output

2 outputs

Ex:

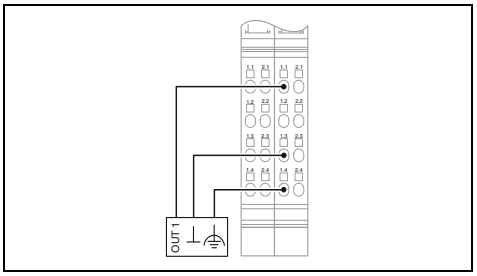

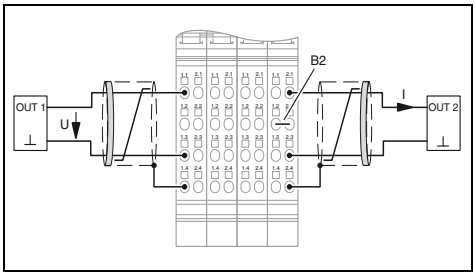

	Technical data	Technical data
Local bus interface		
Connection method	Inline data jumper	Inline data jumper
Power supply for module electronics		
I/O supply voltage U_{ANA}	24 V DC	24 V DC
Current consumption from U_{ANA}	typ. 50 mA	max. 95 mA
Communications power U_L	7.5 V DC	7.5 V DC
Current consumption from U_L	typ. 30 mA	max. 45 mA
Analog outputs		
Connection technology	2-conductor	2-conductor
Number of outputs	1	2
Voltage output signal	0 V ... 10 V	0 V ... 10 V
Load/output load voltage output	> 2 kΩ	> 2 kΩ 0.03%
Current output signal	0 mA ... 20 mA / 4 mA ... 20 mA	0 mA ... 20 mA / 4 mA ... 20 mA
Load/output load current output	< 500 Ω	< 500 Ω
Protective circuit	Transient protection of outputs	Short-circuit protection of outputs
Characteristics		
Representation of output values	16-bit straight binary	16 bits (15 bits + sign bit)
Process data update	< 1 ms	< 1 ms
General data		
Connection method	Spring-cage connection	Spring-cage connection
Connection data rigid / flexible / AWG	0.08 ... 1.5 mm² / 0.08 ... 1.5 mm² / 28 - 16	0.08 ... 1.5 mm² / 0.08 ... 1.5 mm² / 28 - 16
Weight	126 g	125 g
Dimensions W / H / D	24.4 mm / 135 mm / 71.5 mm	48.8 mm / 135 mm / 71.5 mm
EMC note	Class A product, see page 527	Class A product, see page 527

Ordering data

Description	Type	Order No.	Pcs./Pkt.	Type	Order No.	Pcs./Pkt.
Inline analog output terminal, complete with accessories (connector and marking field)						
	IB IL AO 1/SF-PAC	2861315	1	**IB IL AO 2/SF-PAC**	2863083	1
- Machine Edition (ME version)						
- For extended temperature range of -40°C ... +70°C	**IB IL AO 1/SF-XC-PAC**	2701219	1			

Accessories

Connector set	**IB IL AO/CNT-PLSET**	2732664	1			
Shield connector for analog Inline terminals				**IB IL SCN-6 SHIELD**	2726353	5
Connector						

2 outputs, bipolar

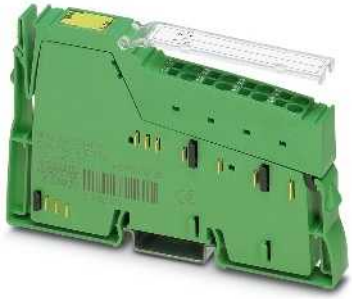

2 outputs, multifunctional

4/8 outputs, bipolar

Ex:

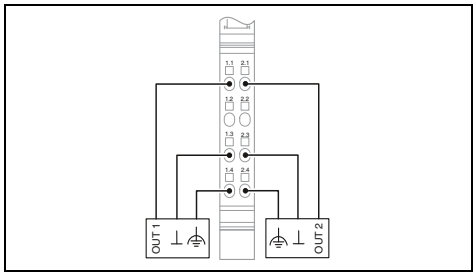

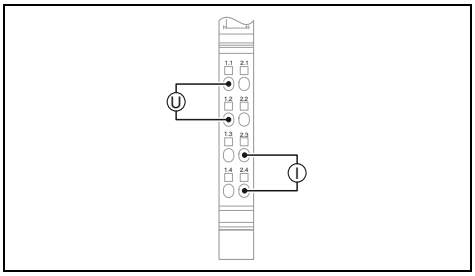

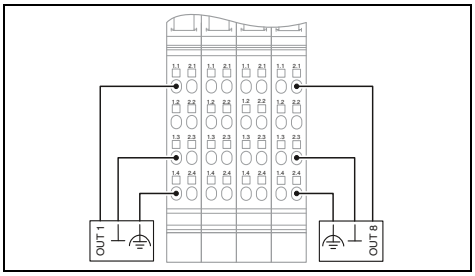

Technical data

IB IL AO 2/U/BP-PAC	IB IL AO 2/U/BP-ME
Inline data jumper	
24 V DC typ. 18 mA (no-load)	max. 35 mA 7.5 V DC max. 40 mA
2-conductor 2 0 V ... 10 V / -10 V ... 10 V > 2 kΩ	> 2 kΩ 0.02% - - Transient protection of outputs
16 bits (15 bits + sign bit) < 1 ms	13 bits (12 bits + sign bit)
Spring-cage connection 0.08 ... 1.5 mm² / 0.08 ... 1.5 mm² / 28 - 16 70 g 12.2 mm / 136.8 mm / 71.5 mm	48 g 12.2 mm / 119.8 mm / 71.5 mm
Class A product, see page 527	

Ordering data

Type	Order No.	Pcs./Pkt.
IB IL AO 2/U/BP-PAC	2861467	1
IB IL AO 2/U/BP-ME	2863957	1

Accessories

IB IL SCN 6-SHIELD-TWIN	2740245	5

Technical data

Inline data jumper
24 V DC typ. 24 mA (no-load) 7.5 V DC typ. 55 mA
2-conductor 2 0 V ... 10 V / -10 V ... 10 V > 1 kΩ 0 mA ... 20 mA / 4 mA ... 20 mA / -20 mA ... 20 mA ≤ 450 Ω Short-circuit and overload protection Transient protection
12 bits (11 bits + sign bit) bus-synchronous
Spring-cage connection 0.08 ... 1.5 mm² / 0.08 ... 1.5 mm² / 28 - 16 66 g 12.2 mm / 119.8 mm / 71.5 mm Class A product, see page 527

Ordering data

Type	Order No.	Pcs./Pkt.
IB IL AO 2/UI-PAC	2700775	1

Accessories

Technical data

Inline data jumper
24 V DC typ. 72 mA 7.5 V DC typ. 80 mA
2-conductor 8 0 V ... 10 V / -10 V ... 10 V / 0 V ... 5 V / -5 V ... 5 V > 2 kΩ 0.05% - - Transient protection of outputs
16 bits (15 bits + sign bit) < 2 ms (depends on operating mode)
Spring-cage connection 0.08 ... 1.5 mm² / 0.08 ... 1.5 mm² / 28 - 16 215 g 48.8 mm / 136.8 mm / 71.5 mm Class A product, see page 527

Ordering data

Type	Order No.	Pcs./Pkt.
IB IL AO 4/8/U/BP-PAC	2878036	1
IB IL AO 4/8/U/BP-XC-PAC	2701164	1

Accessories

IB IL SCN-8	2726337	10

Intrinsically safe I/Os for the Ex area

Connect intrinsically safe signals to the modular Inline I/O system.

Features:

- Disconnect terminal block for installation between non-intrinsically-safe I/O terminals and an intrinsically safe power supply
- Power supply to the intrinsically safe blue I/O terminals with safe electrical isolation
- I/O terminals for connecting intrinsically safe sensors or actuators in zone 1 and zone 0 of the Ex area
- Four configurable channels with diagnostic LEDs per I/O terminal
- Partition plate for installation between intrinsically safe I/O terminals and another intrinsically safe power supply
- Fieldbus-independent diagnostics using FDT/DTM technology

Power terminal for intrinsically safe terminals

Ex:

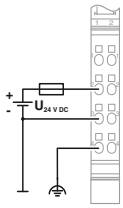

Technical data

Local bus interface		
Connection method		Inline data jumper
Power supply for module electronics		
Supply for main circuit U_{Ex}		28 V DC ±5%
Power supply at U_{Ex}		max. 1000 mA
Current consumption from U_{Ex}		-
Communications power U_L		5 V DC (via voltage jumper)
Power supply at U_L		1000 mA (max.)
Current consumption from U_L		-
Digital inputs		
Connection technology		-
Input circuit		-
Protective circuit		-
Digital outputs		
Connection technology		-
Description of the outputs		-
Analog inputs		
Connection technology		-
Voltage input signal		-
Current input signal		-
Analog outputs		
Connection technology		-
Current output signal		-
Protective circuit		-
Temperature input		
Sensor types that can be used (RTD)		-
Sensor types that can be used (TC)		-
Linear resistance measuring range		-
Measured value resolution		-
Data formats		-
Protective circuit		-
General data		
Connection method		Spring-cage connection
Connection data rigid / flexible / AWG		0.08 ... 1.5 mm² / 0.08 ... 1.5 mm² / 28 - 16
Dimensions	W / H / D	48.8 mm / 119.9 mm / 70.4 mm
Ambient temperature (operation)		-25°C ... 60°C
EMC note		Class A product, see page 527

Ordering data

Description	Type	Order No.	Pcs./Pkt.
Inline terminal, Ex i, complete with accessories (connector and marking field)	**IB IL EX-IS PWR IN-PAC**	2869910	1

Accessories

Inline isolator terminal	**IB IL EX PWR-ISO-PAC**	2869909	1

4 selectable digital channels, input (also NAMUR) or output

Ex:

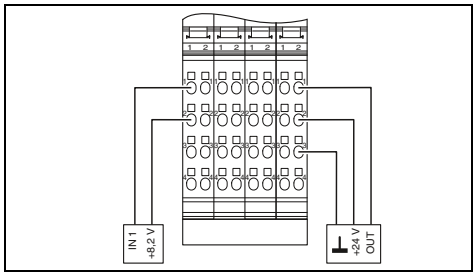

Technical data
Inline data jumper
28 V DC
-
max. 190 mA
5 V DC (via voltage jumper)
-
max. 50 mA
2-conductor
Floating contacts and 2-wire NAMUR proximity sensor (EN 60947-5-6)
Polarity protection, surge protection
3-conductor
Digital passive output
-
-
-
-
-
-
-
-
-
-
-
-
Spring-cage connection
0.08 ... 1.5 mm² / 0.08 ... 1.5 mm² / 28 - 16
48.8 mm / 119.8 mm / 71.5 mm
-25°C ... 60°C
Class A product, see page 527

Ordering data

Type	Order No.	Pcs./Pkt.
IB IL EX-IS DIO 4/NAM-PAC	2869911	1

Accessories

4 selectable analog channels, input or output

Ex:

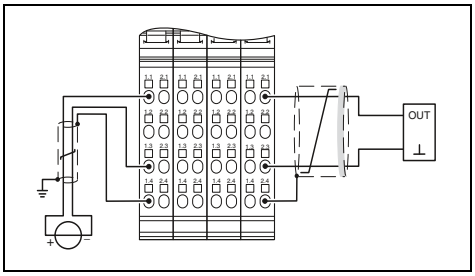

Technical data
Inline data jumper
28 V DC
-
max. 187 mA
5 V DC (via voltage jumper)
-
max. 50 mA
-
-
-
-
-
2-, 3-conductor
0 V ... 10 V
0 mA ... 20 mA / 4 mA ... 20 mA
2-conductor
0 mA ... 20 mA / 4 mA ... 20 mA
Polarity protection, surge protection
-
-
-
-
-
-
Spring-cage connection
0.08 ... 1.5 mm² / 0.08 ... 1.5 mm² / 28 - 16
48.8 mm / 136.8 mm / 71.5 mm
-25°C ... 60°C
Class A product, see page 527

Ordering data

Type	Order No.	Pcs./Pkt.
IB IL EX-IS AIO 4/EF-PAC	2869912	1

Accessories

4 selectable temperature inputs, RTD or TC

Ex:

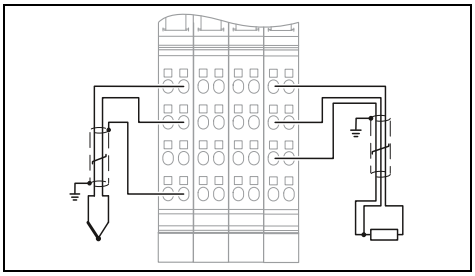

Technical data
Inline data jumper
28 V DC
-
max. 80 mA
5 V DC (via voltage jumper)
-
max. 50 mA
-
-
-
-
-
-
-
-
-
-
-
-
-
-
2- and 3-conductor, Pt, Ni (DIN 100, 200, 500, 1000)
J, K, E, R, S, T
0 Ω ... 800 Ω / 0 Ω ... 5000 Ω
16 bits (15 bits + sign bit)
IB IL, S7-compatible
Polarity protection, surge protection
Spring-cage connection
0.08 ... 1.5 mm² / 0.08 ... 1.5 mm² / 28 - 16
48.8 mm / 136.8 mm / 71.5 mm
-25°C ... 60°C
Class A product, see page 527

Ordering data

Type	Order No.	Pcs./Pkt.
IB IL EX-IS TEMP 4 RTD/TC-PAC	2869913	1

Accessories

Branch terminals

The IBS IL 24 RB-T-PAC and IBS IL 24 RB-LK-PAC INTERBUS branch terminals make it possible to add more system levels to an INTERBUS network. To do so, you can choose between copper cable or fiber optics as the transmission medium. You can operate up to 15 levels in total in the network.

The IB IL 24 FLM-PAC Inline branch terminal enables the direct connection of Fieldline Modular M8 and M12 local bus devices to an Inline station.
The IB IL 24 FLM MUL-TI-PAC branch terminal enables the integration of several Fieldline Modular M8 local buses in an Inline station.

It is possible to skip a row within an Inline station by using the IB IL 24 FLM-PAC Inline branch terminal in combination with the IB IL 24 LSKIP-PAC coupler terminal. This means that you can extend the Inline station onto another DIN rail without having to use a new bus coupler.

Remote bus branch via copper cable

Ex:

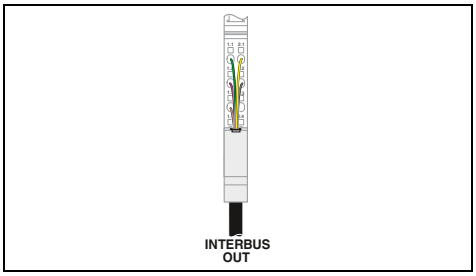

Technical data

Interface		
Connection method		Inline data jumper Inline shield connector
Local bus interface		
Connection method		Inline data jumper
Power supply for module electronics		
Supply voltage		-
Supply voltage range		-
Max. current consumption		-
Communications power U_L		-
Power supply at U_L		-
Current consumption from U_L		-
I/O supply voltage U_{ANA}		24 V DC (via voltage jumper)
Current consumption from U_{ANA}		typ. 29 mA
Power supply at U_{ANA}		-
General data		
Connection method		Spring-cage connection
Connection data rigid / flexible / AWG		0.08 ... 1.5 mm² / 0.08 ... 1.5 mm² / 28 - 16
Weight		67 g
Dimensions	W / H / D	12.2 mm / 135 mm / 71.5 mm
EMC note		Class A product, see page 527

Ordering data

Description	Type	Order No.	Pcs./Pkt.
Inline branch terminal, complete with accessories (connector and marking field)			
	IBS IL 24 RB-T-PAC	2861441	1
- For extended temperature range of -40°C ... +70°C	**IBS IL 24 RB-T-XC-PAC**	2701151	1

Accessories

Inline segment terminal, complete with accessories (connector and marking field)			
Shield connector for analog Inline terminals	**IB IL SCN-6 SHIELD**	2726353	5

Remote bus branch via fiber optics

Fieldline Modular extension

Coupler terminal

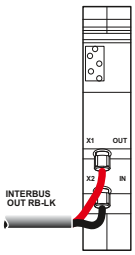

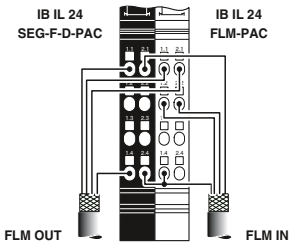

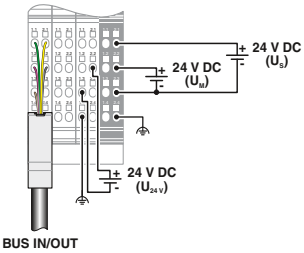

Technical data

FSMA connector	
Inline data jumper	
-	
-	
-	
-	
-	
-	
24 V DC (via voltage jumper)	
typ. 42 mA	
max. 51 mA	
-	
FSMA connector	
-	
89 g	
24.4 mm / 119.8 mm / 71.5 mm	
Class A product, see page 527	

Ordering data

Type	Order No.	Pcs./Pkt.
IBS IL 24 RB-LK	2878117	1

Accessories

Technical data

	IB IL 24 FLM-PAC	IB IL 24 FLM MULTI-PAC
		Inline shield connector
Inline data jumper	Inline data jumper Inline shield connector	Inline data jumper
-	-	
-	-	
-	-	
-	7.5 V DC (via voltage jumper)	
-	-	
-	110 mA	50 mA
24 V DC (via voltage jumper)	-	
typ. 42 mA	-	
max. 51 mA		
-	-	
FSMA connector	Spring-cage connection	
-	0.08 ... 1.5 mm² / 0.08 ... 1.5 mm² / 28 - 16	
89 g	43 g	
24.4 mm / 119.8 mm / 71.5 mm	12.2 mm / 136.8 mm / 71.5 mm	
Class A product, see page 527	Class A product, see page 527	

Ordering data

Type	Order No.	Pcs./Pkt.
IB IL 24 FLM-PAC	2736903	1
IB IL 24 FLM MULTI-PAC	2737009	1

Accessories

IB IL 24 SEG/F-PAC	2861373	1
IB IL SCN-6 SHIELD	2726353	5

Technical data

-
Inline shield connector Inline data jumper
24 V DC (via Inline connector)
19.2 V DC ... 30 V DC (including all tolerances, including ripple)
max. 1.25 A (at nominal voltage; consisting of: 0.75 A DC for the communications power and 0.5 A DC for the analog voltage supply)
7.5 V DC (via voltage jumper)
max. 2 A DC (observe derating)
-
24 V DC (via voltage jumper)
-
max. 0.5 A DC (observe derating)
Spring-cage connection
0.08 ... 1.5 mm² / 0.08 ... 1.5 mm² / 28 - 16
207 g
48.8 mm / 135 mm / 71.5 mm
Class A product, see page 527

Ordering data

Type	Order No.	Pcs./Pkt.
IB IL 24 LSKIP-PAC	2897457	1

Accessories

Serial communication terminals

The serial Inline communication terminal can be used to connect devices with a serial interface, (e.g., bar code scanners).

Features:
- RS-232 or RS-485/RS-422 communication
- Baud rates of up to 250 kbaud
- Number of data bits, stop bits, and parity can be set
- Communication via process data
- Process data width can be set using DIP switches

1 serial RS-485/RS-422 or RS-232 interface, process data communication

Ex:

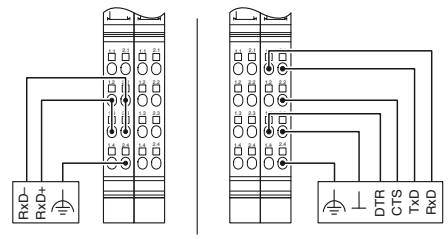

Technical data

Local bus interface	
Connection method	Inline data jumper
Serial port	
Interface	RS-232, RS-485, RS-422
Power supply for module electronics	
Communications power U_L	7.5 V
Current consumption from U_L	typ. 78 mA
Serial input/output channel	
Input buffer	4 kByte
Output buffer	1 kByte
Transmission speed	110 bps ... 250000 bps (configurable)
Data bits	5 ... 8
Stop bits	1 or 2
Parity	Even, odd or no parity
Transmission type	Transparent mode, end-to-end mode, XON/XOFF
General data	
Connection method	Spring-cage connection
Connection data rigid / flexible / AWG	0.08 ... 1.5 mm^2 / 0.08 ... 1.5 mm^2 / 28 - 16
Weight	135 g
Dimensions W / H / D	24.4 mm / 135 mm / 71.5 mm

Ordering data

Description	Type	Order No.	Pcs./Pkt.
Inline communication terminal, complete with accessories (connector and marking field) - 1 serial input and output channel as RS-485/RS-422 or RS-232 version	**IB IL RS UNI-PAC**	2700893	1

Accessories

Connector set	**IB IL AO/CNT-PLSET**	2732664	1

INTERFACE system bus master terminal

The Inline terminal can be used to connect INTERFACE modules to the Inline station and thus the higher-level bus system via the INTERFACE system bus.

Features:

- Easy integration of up to 8 INTERFACE EMM and EEM modules with firmware 1.03 or later
- User-friendly parameterization, configuration, and diagnostics using DTMs (Device Type Managers)
- Serial interface (S port) including a memory stick for saving the configuration
- Acquisition and output of up to 31 measured values and 16 manipulated variables
- Application: motor and energy data management

INTERFACE system bus master

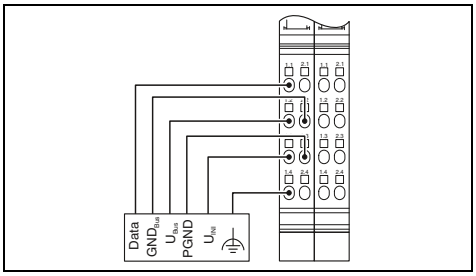

Technical data

Local bus interface	
Connection method	Bus base module
Communication interface	
Interface	INTERFACE system bus
Connection method	Inline shield connector
Programming interface	
Interface	Programming interface (S port)
Connection method	IFS-USB-PROG-ADAPTER
Power supply for module electronics	
Communications power U_L	7.5 V
Current consumption from U_L	typ. 66 mA
Supply of the connected INTERFACE modules	
9 V supply	
Voltage range	8.1 V ... 9.9 V
Type of protection	Short-circuit protection, electronic
Max. current carrying capacity	300 mA
24 V supply (EEM, EMM)	
Voltage range	19.2 V ... 30 V (including ripple)
Type of protection	Short-circuit protection, electronic and thermal
Max. current carrying capacity	4 A
General data	
Connection method	Spring-cage connection
Connection data rigid / flexible / AWG	0.08 ... 1.5 mm² / 0.08 ... 1.5 mm² / 28 - 16
Weight	
Width	24.4 mm

Ordering data

Description	Type	Order No.	Pcs./Pkt.
Inline modular communication terminal, complete with accessories (connector and marking field)			
- For connecting the INTERFACE system bus	**IB IL IFS-MA-PAC**	2692720	1

Accessories

Connector set	**IB IL AO/CNT-PLSET**	2732664	1
Programming adapter with USB interface	**IFS-USB-PROG-ADAPTER**	2811271	1
Multi-functional memory module for the Interface system	**IFS-CONFSTICK**	2986122	1
Assembled connecting cable, IL-IFS, 2 m in length	**IMC 1,5/ 5-ST-3,81SET IL IFS 2M**	1784729	1

DALI master terminals

In addition to DALI communication, the DALI master also provides the DALI bus supply. You do not need an external DALI power supply unit. This terminal can be extended with up to three IB IL DALI-PAC devices, each of which represents another DALI master.

Features:
- Up to 64 DALI devices per master terminal
- Safe electrical isolation of the DALI bus
- Protection of the DALI bus against accidental connection of the mains voltage (up to 250 V AC)
- Indication of diagnostics, transmission, and receipt
- Function blocks for PC Worx are available

The DALI multimaster is used to communicate with both DALI ballasts and DALI sensors. The DALI multimaster contains the DALI bus supply.

IB IL DALI/MM-PAC features:
- Up to 64 DALI devices
- DALI supply can be switched off
- Suitable for single and multimaster operation
- Protection of the DALI bus against accidental connection of the mains voltage (up to 250 V AC)

DALI master, multi-master-capable as an option

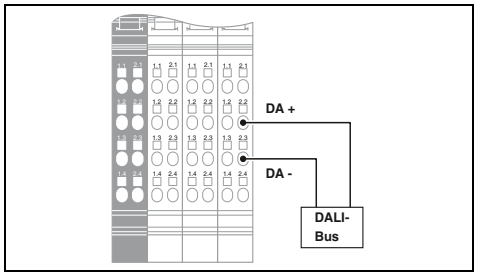

Technical data

		IB IL DALI/PWR-PAC	IB IL DALI/MM-PAC
Local bus interface			
Connection method		Inline data jumper	
Power supply for module electronics			
Communications power U_L		7.5 V DC (via voltage jumper)	
Current consumption from U_L		max. 38 mA	max. 75 mA
Main circuit supply U_M		24 V DC (via voltage jumper)	
Current consumption from U_M		max. 441 mA	max. 230 mA
General data			
Connection method		Spring-cage connection	
Connection data rigid / flexible / AWG		0.2 ... 1.5 mm² / 0.2 ... 1.5 mm² / 24 - 16	0.2 ... 1.5 mm² / 0.08 ... 1.5 mm² / 24 - 16
Weight		194 g	180 g
Dimensions	W / H / D	48.8 mm / 119.8 mm / 71.5 mm	

Ordering data

Description	Type	Order No.	Pcs./Pkt.
1-channel DALI master, complete with accessories (connector and marking field)			
- Integrated DALI power supply unit	**IB IL DALI/PWR-PAC**	2897813	1
- Extension for IB IL DALI/PWR-PAC	**IB IL DALI-PAC**	2897910	1
DALI master, with integrated DALI bus supply, suitable for single and multi-master operation, complete with accessories (connector and marking field)	**IB IL DALI/MM-PAC**	2700605	1

CAN master terminal

The Inline terminal can be used to connect a lower-level CAN network. Within the Inline station, the terminal acts as a CAN master for the CAN system.

Any CAN frames with 11-bit or 29-bit identifier can be transmitted via the terminal by the PLC to all types of CAN devices, regardless of the CAN protocol present there.

Features:

- Transparent mode
- CAN 2.0A (11-bit identifier; standard frame)
- CAN 2.0B (29-bit identifier; extended frame)
- Transmission speed of 10 kbps to 1 Mbps
- Maximum data width: 126 bytes + 2-byte command/status word
- User-friendly controller-independent software tool for configuring the CAN network
- Serial interface (S port) including a memory stick for saving the configuration

Notes:

The driver function blocks can be obtained free of charge on the Internet at phoenixcontact.net/products under Download on the product page of the corresponding module.

CAN master

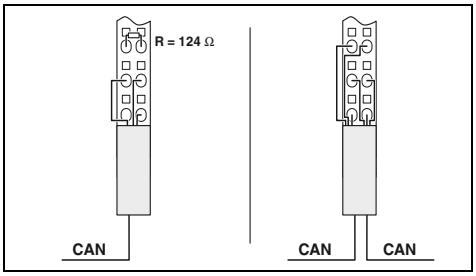

Technical data

Local bus interface		
Connection method		Bus base module
Communication interface		
Interface		CAN bus
Connection method		Inline shield connector
Programming interface		
Interface		CAN bus
Connection method		Inline shield connector
Power supply for module electronics		
Communications power U_L		7.5 V
Current consumption from U_L		typ. 110 mA
Main circuit supply U_M		24 V DC (via voltage jumper)
Current consumption from U_M		max. 12 mA
General data		
Connection method		Spring-cage connection
Connection data rigid / flexible / AWG		0.08 ... 1.5 mm² / 0.08 ... 1.5 mm² / 28 - 16
Weight		
Dimensions	W / H / D	12.2 mm / 136.8 mm / 71.5 mm

Ordering data

Description	Type	Order No.	Pcs./Pkt.
Inline modular communication terminal, complete with accessories (connector and marking field)			
- For connecting a CAN bus system	**IB IL CAN-MA-PAC**	2700196	1
- For extended temperature range of -40°C ... +70°C	**IB IL CAN-MA-XC-PAC**	2701160	1

Accessories

Shield connector	**IB IL SCN 6-SHIELD-TWIN**	2740245	5
Multi-functional memory module for the Interface system	**IFS-CONFSTICK**	2986122	1
Configuration cable for IB IL CAN-MA-PAC	**IB IL CAN-MA CONF-CAB**	2700620	1

PROFIBUS terminal

The PROFIBUS terminal enables the connection of PROFIBUS modules to a PC Worx controller via INTERBUS or PROFINET.

Likewise, a PC Worx controller can be integrated into an existing PROFIBUS system.

The terminal supports both the master and slave functions.

Features:

- PROFIBUS DP V0 master for a maximum of ten PROFIBUS slaves with up to 48 data words of input and output data
- PROFIBUS DP V0 master for a maximum of three PROFIBUS slaves with up to 56 data words of input and output data
- PROFIBUS DP slave with a maximum of 56 data words
- User-friendly parameterization via PC Worx
- Local plug-in memory for backing up the configuration

PROFIBUS master/slave

Technical data

Local bus interface		
Connection method		Bus base module
Communication interface		
Interface		PROFIBUS DP V0 master/slave
Connection method		9-pos. D-SUB socket
Power supply for module electronics		
Communications power U_L		7.5 V
Current consumption from U_L		typ. 98 mA
General data		
Connection method		9-pos. D-SUB socket
Weight		
Dimensions	W / H / D	48.8 mm / 119.8 mm / 71.5 mm

Ordering data

Description	Type	Order No.	Pcs./Pkt.
Inline PROFIBUS master, complete with accessories (connector and marking field)	**IB IL PB MA-PAC**	2700630	1

Accessories

D-SUB connector, 9-pos. with two cable entries, termination resistor can be switched on via slide switch	**SUBCON-PLUS-PROFIB**	2744348	1

Counter terminal

The Inline counter terminal detects and processes fast pulse sequences from sensors.

Possible operating modes:
- Event counting
- Frequency measurement (time- or state-controlled)
- Time measurement (period or pulse length)
- Pulse generator

Features:
- 1 counter
- 24 V sensor supply including monitoring
- Processing of 5 V or 24 V signals
- Input frequency of up to 100 kHz
- Gate input
- 24-bit counter value for event counting and frequency measurement
- Frequency measurement resolution of up to 0.1 Hz
- 16-bit counter value for time measurement
- Time measurement resolutions: 2 µs, 1 ms, and 10 ms
- 24 V onboard output switches when relation condition is met
- Start and final value can be modified during counting

Notes:

The driver function blocks can be obtained free of charge on the Internet at phoenixcontact.net/products under Download on the product page of the corresponding module.

1 counter input

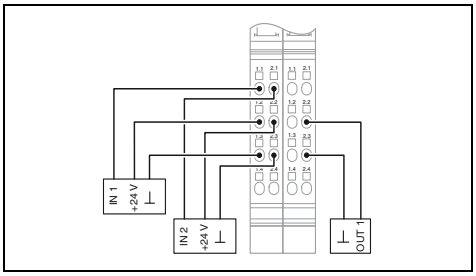

Technical data

Local bus interface	
Connection method	Inline data jumper
Power supply for module electronics	
Segment circuit supply U_S	24 V DC (via voltage jumper)
Current consumption from U_S	max. 1 A
Communications power U_L	7.5 V DC
Current consumption from U_L	typ. 40 mA
Counter input	
Operating modes	Event counting, frequency/time measurement
Input frequency	max. 100 kHz
Input voltage	24 V DC (nominal voltage) / 30 V DC (maximum)
Input current	typ. 5 mA
Control input	
Connection technology	2-, 3-conductor
Input voltage	24 V DC (nominal voltage) / 30 V DC (maximum)
Input current	typ. 5 mA
Digital outputs	
Number of outputs	1
Connection technology	2-conductor
Output voltage	24 V DC (nominal voltage)
Output current	max. 0.5 A (nominal current)
General data	
Connection method	Spring-cage connection
Connection data rigid / flexible / AWG	0.08 ... 1.5 mm² / 0.08 ... 1.5 mm² / 28 - 16
Weight	130 g
Dimensions W / H / D	24.4 mm / 135 mm / 71.5 mm

Ordering data

Description	Type	Order No.	Pcs./Pkt.
Inline counter terminal, complete with accessories (connector and marking field)			
	IB IL CNT-PAC	2861852	1
- For extended temperature range of -40°C ... +70°C	**IB IL CNT-XC-PAC**	2702134	1

Accessories

Connector set	**IB IL AO/CNT-PLSET**	2732664	1

Pulse width terminal

The Inline PWM terminal outputs signals; depending on the operating mode, either the pulse length, period length or frequency can be set.

Features:

- 2 independent channels
- Output of 5 V or 24 V signals
- Maximum frequency of 50 kHz
- Pulse width modulation:
  Period length can be set in increments from 100 µs to 10 s, duty factor in 0.39% increments
- Frequency output: can be set between 0 Hz and 50 kHz
- Single pulse output: pulse length can be set between 10 µs and 25.5 s
- Pulse/direction signal output without integrated ramp function to control step motor power sections

Notes:

The driver function blocks can be obtained free of charge on the Internet at phoenixcontact.net/products under Download on the product page of the corresponding module.

Pulse width modulation, frequency generator or pulse/direction signal output

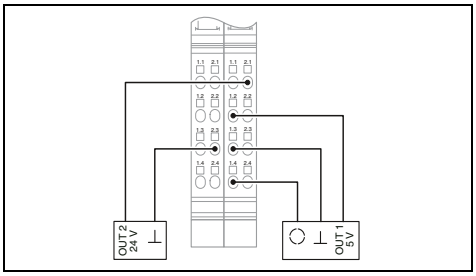

Technical data

Local bus interface		
Connection method		Inline data jumper
Power supply for module electronics		
Segment circuit supply U_S		24 V DC (via voltage jumper)
Current consumption from U_S		max. 1 A
Communications power U_L		7.5 V
Current consumption from U_L		max. 130 mA
Digital outputs		
Number of outputs		2
Connection technology		2-conductor (shielded)
Output voltage		24 V
General data		
Connection method		Spring-cage connection
Connection data rigid / flexible / AWG		0.08 ... 1.5 mm² / 0.08 ... 1.5 mm² / 28 - 16
Weight		130 g
Dimensions	W / H / D	24.4 mm / 136.8 mm / 71.5 mm

Ordering data

Description	Type	Order No.	Pcs./Pkt.
Inline function terminal, complete with accessories (connector and marking field)	**IB IL PWM/2-PAC**	**2861632**	1

Accessories

Connector	**IB IL SCN-8**	**2726337**	10
Shield connector	**IB IL SCN 6-SHIELD-TWIN**	**2740245**	5

Power measurement terminal

This module is designed for use within an Inline station.

The power measurement terminal enables you to analyze AC networks and is used in applications where conventional analog meters in distribution systems no longer meet growing requirements. This is particularly true in cases where it is important to analyze distortions and harmonics as well as measuring current, voltage, and power.

Features:

– 3 phases plus neutral conductor, connectable
– Direct current detection, 1 A or 5 A
– Line-to-line voltage up to 690 V AC (L-L)
– Specification in accordance with EN 61010−1:2001:
  - Measurement category 3 (300 V AC (L-N))
  - Measurement category 2 (400 V AC (L-N))
– Network variables:
  - Phase currents and neutral conductor current
  - Phase and phase conductor voltages
  - Real, reactive, and apparent power
  - Power factors of phases
  - Power flow directions
  - Frequency
– Operating modes:
  - Basic measured values
  - Scanning measured values (64 scans/full wave)
– Synchronization
– Triggers for measurement intervals can be freely defined
– Harmonic analysis up to 31st harmonic
– Determination of maximum value
– Operating hours counter
– Power meter
– Bimetal filtering

Analysis of AC networks

EAC

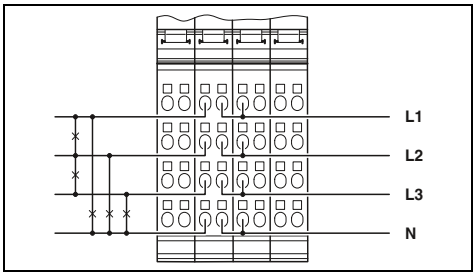

Technical data

Local bus interface	
Designation	Inline local bus
Connection method	Inline data jumper
Power supply for module electronics	
Communications power U_L	7.5 V
Current consumption from U_L	typ. 130 mA
Current measuring input	
Nominal current I_N	5 A AC (1 A AC, depending on parameterization)
Overload	1.4 times continuous; 150 A for 10 ms
Precision	0.25% (of the nominal value)
Scanning rate	22.4 k samples/50 Hz
Voltage measuring input	
Nominal voltage U_N	400 V AC (nominal phase voltage)
Nominal voltage range	0 V AC ... 690 V AC (conductor-conductor, chained)
Overload	1.2 times the nominal value
Precision	0.25% (of the nominal value)
Scanning rate	22.4 k samples/50 Hz
General data	
Connection method	Spring-cage connection
Connection data rigid / flexible / AWG	0.2 ... 1.5 mm² / 0.2 ... 1.5 mm² / 24 - 16
Weight	200 g
Width	48.8 mm
Ambient temperature (operation)	-25°C ... 55°C

Ordering data

Description	Type	Order No.	Pcs./Pkt.
Inline power measurement terminal, complete with accessories (connector and marking field)	**IB IL PM 3P/N/EF-PAC**	2700965	1

Accessories

Marking field, width: 12.2 mm	**IB IL FIELD 2**	2727501	10
Marking field, width: 48.8 mm	**IB IL FIELD 8**	2727515	10

Position measurement terminals

The Inline position detection terminals allow you to record positions via incremental encoders, absolute encoders with SSI interface or magnetostrictive encoders with start/stop interface.

IB IL INC-IN-PAC features:

- Symmetrical and asymmetrical incremental encoders with or without Z trace can be connected
- Shield connection
- Maximum input frequency of 300 kHz
- Single, double or quadruple evaluation
- 25-bit actual position value
- 5 V and 24 V encoder supply including monitoring
- 3 digital inputs to connect two limit switches and one home position switch
- 5 homing functions
- Direction of rotation indicator via LED
- Open circuit detection

IB IL SSI-IN-PAC features:

- 1 single or multi-turn encoder with up to 25-bit resolution can be connected
- Transmission frequency of up to 1 MHz
- 5 V encoder supply including monitoring
- Gray or binary code
- Parity monitoring
- Reversal of direction of rotation
- Shield connection

IB IL IMPULSE-IN-PAC features:

- 1 magnetostrictive encoder can be connected
- Evaluation of the position of a magnet
- Length measuring range of up to 3.85 m
- Position resolution of 5 µm
- Ultrasonic encoder speed of 2500 m/s to 2999.99 m/s
- 24 V encoder supply including monitoring
- Shield connection

Notes:

The driver function blocks can be obtained free of charge on the Internet at phoenixcontact.net/products under Download on the product page of the corresponding module.

Input for incremental encoder with square-wave signal (symmetrical or asymmetrical)

Ex:

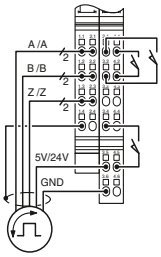

Technical data

Local bus interface		
Connection method		Inline data jumper
Power supply for module electronics		
Main circuit supply U_M		24 V DC (via voltage jumper)
Current consumption from U_M		max. 1 A
Communications power U_L		7.5 V DC
Current consumption from U_L		max. 70 mA
Encoder supply voltage		5 V DC / 24 V DC
Encoder supply current		max. 250 mA
Drawing encoder supply voltage		Main circuit U_M
Drawing initiator supply		Main circuit U_M
Incremental encoder input		
Number of inputs		1
Description of the input		Symmetrical (RS-422) or asymmetrical (3.5 V to -27 V)
Input frequency (24 V)		0 Hz ... 300 kHz
Absolute position encoder input		
Number of inputs		-
Transmission frequency		-
Adjustable resolution		-
Input for magnetostrictive encoders		
Length measuring range		-
Resolution (measuring length)		-
Ultrasonic speed (gradient)		-
Digital inputs		
Number of inputs		3
Input voltage range “0” signal		-30 V DC ... 5 V DC
Input voltage range “1” signal		15 V DC ... 30 V DC
General data		
Connection method		Spring-cage connection
Connection data rigid / flexible / AWG		0.08 ... 1.5 mm² / 0.08 ... 1.5 mm² / 28 - 16
Weight		143 g
Dimensions	W / H / D	24.4 mm / 140.5 mm / 71.5 mm

Ordering data

Inline position measurement terminal, complete with accessories (connector and marking field)	**IB IL INC-IN-PAC**	2861755	1

Accessories

Connector	**IB IL SCN-12-ICP**	2727611	10
Shield connector for analog Inline terminals	**IB IL SCN-6 SHIELD**	2726353	5

Input for absolute rotation or travel measuring systems with SSI interface

Input for magnetostrictive encoder with start/stop interface

EAC
Ex:

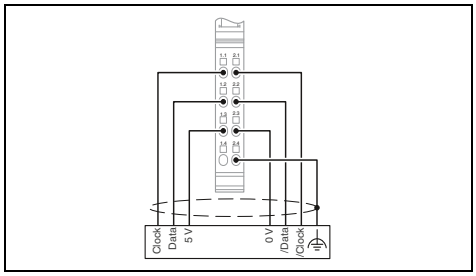

EAC

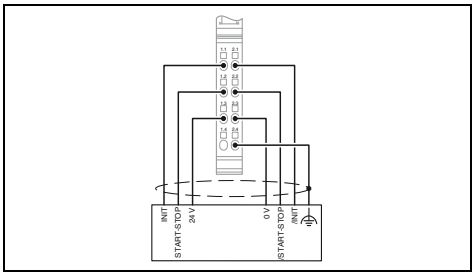

Technical data	Technical data
Inline data jumper	-
24 V DC (via voltage jumper) max. 66 mA 7.5 V DC max. 28 mA 5 V DC max. 250 mA Main circuit U_M -	24 V DC (via voltage jumper) max. 250 mA (short-circuit and overload protection) 7.5 V max. 70 mA - - - -
- - -	- - -
1 100 kHz / 200 kHz / 400 kHz / 800 kHz / 1 MHz 25 bit (maximum)	- - -
- - -	0 mm ... 3850 mm 5 µm 2500 m/s ... 2999.99 m/s
- - -	- - -
Spring-cage connection 0.08 ... 1.5 mm² / 0.08 ... 1.5 mm² / 28 - 16 71 g 12.2 mm / 135 mm / 71.5 mm	Spring-cage connection 0.08 ... 1.5 mm² / 0.08 ... 1.5 mm² / 28 - 16 - 12.2 mm / 135 mm / 71.5 mm

Ordering data			Ordering data		
IB IL SSI-IN-PAC	2819574	1	**IB IL IMPULSE-IN-PAC**	2861768	1

Accessories			Accessories		
IB IL SCN-6 SHIELD	2726353	5	**IB IL SCN-6 SHIELD**	2726353	5

Positioning control terminals

The Inline positioning control system is suitable for point-to-point positioning of binary-controlled drives, e.g., pole-changing AC motors, in accordance with the rapid motion/creeping motion principle and supports the positioning of rotary and linear axes.

It can be used to perform simple positioning tasks, such as positioning:
– Transportation equipment
– Format adjustments (adjustable axes)
– Tools

It is not necessary to set control parameters here. After specifying a target position, the terminal automatically, and therefore independently of the bus, assumes control of the drive by specifying both the traversing rate (rapid motion/creeping motion) and the traversing direction via four binary outputs and signaling when the target point has been reached.

Features:
– Position detection using absolute encoders with SSI interface
– 5 V and 24 V encoder supply including monitoring
– 24 V sensor supply including monitoring
– 3 digital inputs
– 4 digital outputs
– Software limit switch
– Integrated monitoring functions
– Gear ratio can be parameterized
– Backlash and friction compensation
– Startup using hand-held operator panel mode

Notes:

The driver function blocks can be obtained free of charge on the Internet at phoenixcontact.net/products under Download on the product page of the corresponding module.

SSI interface for absolute encoders

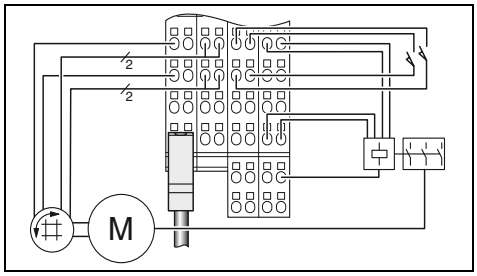

Technical data

Local bus interface	
Connection method	Inline data jumper
Power supply for module electronics	
Main circuit supply U_M	24 V DC (via voltage jumper)
Current consumption from U_M	max. 1 A
Segment circuit supply U_S	24 V DC (via voltage jumper)
Current consumption from U_S	max. 2 A
Communications power U_L	7.5 V DC
Current consumption from U_L	max. 60 mA
Encoder supply voltage	5 V DC / 24 V DC
Encoder supply current	500 mA
Drawing encoder supply voltage	Main circuit U_M
Drawing initiator supply	Main circuit U_M
Absolute position encoder input	
Number of inputs	1
Transmission frequency	400 kHz
Adjustable resolution	26 bit (maximum)
Digital inputs	
Number of inputs	3
Input voltage range “0” signal	-30 V DC ... 5 V DC
Input voltage range “1” signal	13 V DC ... 30 V DC
Digital outputs	
Number of outputs	4
Output voltage	24 V DC
Output current	2 A
General data	
Connection method	Spring-cage connection
Connection data rigid / flexible / AWG	0.08 ... 1.5 mm² / 0.08 ... 1.5 mm² / 28 - 16
Weight	210 g
Dimensions W / H / D	48.8 mm / 140.5 mm / 71.5 mm

Ordering data

Inline positioning terminal, complete with accessories (connector and marking field) - Absolute encoder input	**IB IL SSI-PAC**	2861865	1

Accessories

Connector	**IB IL SCN-12-ICP**	2727611	10
Shield connector for analog Inline terminals	**IB IL SCN-6 SHIELD**	2726353	5

Servo controller for EC motors

The IB IL EC AR 48/10A Inline servo controller is a universal power output module with a 4 quadrant function for permanently excited DC motors with brushgears or electronically commutated DC motors (EC motors) with up to 450 W power output.

Features:

- Variable frequency drive with positioning function
- Electronic commutation with Hall sensors
- Point-to-point positioning function
- Speed profile: trapezoid or S curve
- Position, speed, and torque control
- Position detection with incremental encoder
- Homing
- Max. 48 V/10 A
- Overall width of 97.6 mm
- Software tool for operation and startup including oscilloscope function
- Cycle time of the position controller: 1 ms
- For single- and multi-axis applications

Applications:

- Handling machines in the semiconductor industry, in small parts protection, in the electronics industry, and in test engineering
- Assembly machines in small appliance production
- Bearing and conveying technology for small loads
- Format adjustment in processing machines and packaging machines
- Laboratory technology

Notes:

The driver function blocks can be obtained free of charge on the Internet at phoenixcontact.net/products under Download on the product page of the corresponding module.

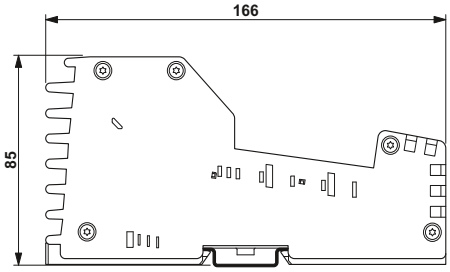

Servo controller for 24 V motors with positioning and homing function

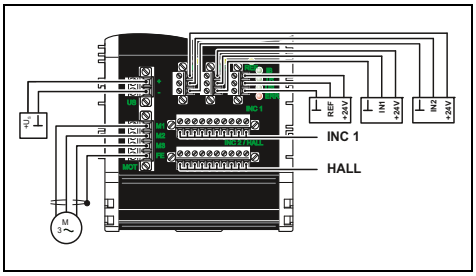

Technical data

Interface	
Inline local bus	Inline data jumper
Startup and diagnostics	RS-232
Power supply for module electronics	
Main circuit supply U_M	24 V DC (via voltage jumper)
Current consumption from U_M	max. 150 mA
Communications power U_L	7.5 V DC
Current consumption from U_L	typ. 30 mA
Power supply	
Connection method	2-pos. COMBICON connector
Supply voltage range	12 V DC ... 48 V DC ±15% (surge voltage shutdown U_S > 60 V DC)
Motor output	
Output name	1 permanently excited DC motor with or without brushgear
Connection method	4-pos. COMBICON connector with shield clip
Nominal current range	max. 10 A (starting/continuous current)
Nominal motor power	450 W (power consumption)
Function	4 quadrant servo controller
Incremental encoder input	
Description of the input	Symmetrical incremental encoders
Input frequency (5 V)	max. 1 MHz
Description of the input	Asymmetrical incremental encoders
Input frequency (5 V)	max. 500 kHz (at 4 V voltage level)
Input frequency (24 V)	max. 100 kHz (at 20 V voltage level)
Digital inputs	
Number of inputs	3
Connection method	MINI COMBICON
Connection technology	3-conductor (signal, Us, GND)
General data	
Connection method	Screw connection
Connection data rigid / flexible / AWG front MSTB	0.2 ... 2.5 mm^2 / 0.2 ... 2.5 mm^2 / 24 - 12
Connection data rigid / flexible / AWG front MC	0.14 ... 2.5 mm^2 / 0.2 ... 2.5 mm^2 / 28 - 16
Weight	880 g
Width	97.6 mm
EMC note	Class A product, see page 527

Ordering data

Description	Type	Order No.	Pcs./Pkt.
Inline variable frequency drive, including connector			
- For DC motors with brushgear and EC motors (without brushgear)	**IB IL EC AR 48/10A-PAC**	2819587	1

Power-level terminals

The single-channel power-level terminals for direct and reversing starters and the electromechanical version with electronic motor protection enable a three-phase asynchronous motor to be switched, protected, and monitored via a bus system.

The power-level terminals are designed for use within the 24 V area of an Inline station.

Features:

- Integrated electronic motor protection in accordance with IEC 60947-4
- Connection option for an external passive brake module
- Manual local operation
- Safe isolation between mains voltage and 24 V supply voltage in accordance with EN 50178
- Diagnostic and status indicators
- Motor current monitoring
- Motor control via OUT process data

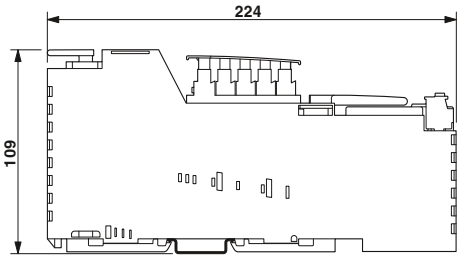

Electronic direct or reversing load starter, up to 1.5 kW / 400 V AC

EAC

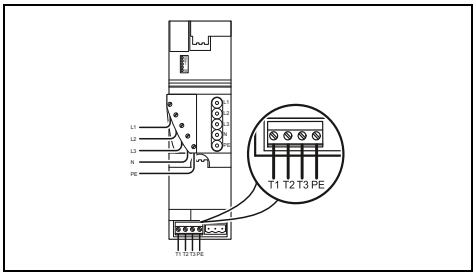

Technical data

Interface	
Inline local bus	Inline data jumper
Power supply for module electronics	
Segment circuit supply U_S	24 V DC (via voltage jumper)
Current consumption from U_S	max. 50 mA
Communications power U_L	7.5 V
Current consumption from U_L	max. 45 mA
Motor starter, output	
Connection method	COMBICON
Output voltage range	200 V AC ... 400 V AC
Nominal current range	0.2 A ... 3.6 A
Power factor	0.3
Switching rate	Max. 30 per minute (observe derating)
Motor monitoring	
Tripping class	Based on class 10 A of IEC 60947-4: 1990
Overspeed tripping	≥ 20 A (after 0.3 seconds)
Output	
Maximum switching voltage	-
Max. switching current	-
Switch-off delay	-
Switch-on delay	-
General data	
Width	63 mm
EMC note	Class A product, see page 527

Ordering data

Description	Type	Order No.	Pcs./Pkt.
Inline power-level terminals, incl. motor circuit connector			
- Electronic direct starter	**IB IL 400 ELR 1-3A**	2727352	1
- Electronic reversing load starter	**IB IL 400 ELR R-3A**	2727378	1
- Electromechanical direct starter			
Inline brake module, for brake control in conjunction with Inline power-level terminals			
- For 440 V AC/DC brakes			

Accessories

Inline thermistor terminal, complete with accessories (connector and marking field)	**IB IL 24 TC-PAC**	2861360	1
Power connector for Inline power-level terminals	**IB IL 400 CN-PWR-IN**	2836078	1
Power bridge for Inline power-level terminals	**IB IL 400 CN-BRG**	2836081	1
Motor-circuit connector for Inline power-level terminals	**GMVSTBW 2,5 HV/ 4-ST-7,62 NZIL**	1893957	10

Electromechanical direct starter, up to 3.7 kW / 400 V AC

Extension module, for brake control of power-level terminals

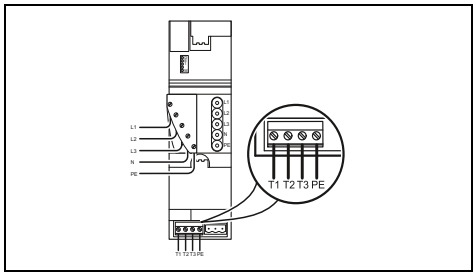

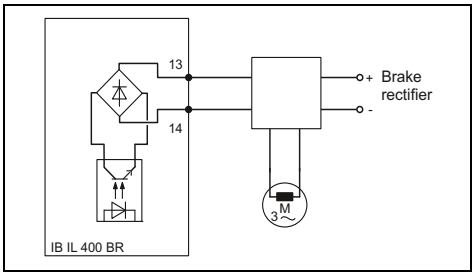

Technical data

Inline data jumper	-
24 V DC (via voltage jumper)	-
max. 160 mA	-
7.5 V	-
max. 50 mA	-
COMBICON	-
200 V AC ... 600 V AC	-
0.2 A ... 8 A	-
0.3	-
max. 5 cycles per minute	-
Based on class 10 A of IEC 60947-4: 1990	-
≥ 40 A (after 0.3 seconds)	-
-	440 V AC/DC
-	300 mA AC/DC
-	< 1 ms
-	< 4 ms
63 mm	55 mm
Class A product, see page 527	Class A product, see page 527

Ordering data

Type	Order No.	Pcs./Pkt.
IB IL 400 MLR 1-8A	2727365	1

Ordering data

Type	Order No.	Pcs./Pkt.
IB IL 400 BR	2727394	1

Accessories

IB IL 24 TC-PAC	2861360	1
IB IL 400 CN-PWR-IN	2836078	1
IB IL 400 CN-BRG	2836081	1
GMVSTBW 2,5 HV/ 4-ST-7,62 NZIL	1893957	10

Accessories

IO-Link master – Stand-alone

The IOL MA8 PN DI8 and IOL MA8 EIP DI8 IO-Link masters enable the connection of up to eight IO-Link devices in the control cabinet. Eight additional digital inputs for connecting standard sensors extend the possible applications of the devices.

Parameterization and diagnostics of the connected IO-Link devices can be easily performed using the integrated web server. The IO-Link description files (IODD) of the IO-Link devices can be read in via the graphical user interface with cross-manufacturer compatibility.

All terminal points of the device feature Push-in connection technology. This ensures quick and easy installation of the device.

For future-proof communication, the IO-Link masters support the PROFINET, EtherNet/IP™, and Modbus/TCP network protocols.

The IO-Link masters support the connection of IO-Link devices in accordance with IO-Link specification V1.1.

Find out more with the web code

Detailed information regarding our IO-Link products can be found on our website. Simply enter # and numbers in the search field.

Your web code: #2074

Convenient configuration and diagnostics of the connected IO-Link devices

Future-proof communication

Fast installation, thanks to Push-in connection technology

IO-Link master

The stand-alone IO-Link master is used to connect IO-Link devices. In addition, up to eight standard sensors can be connected to the IO-Link master via digital inputs.

Features:

- Convenient web server for the parameterization and diagnostics of IO-Link devices
- Quick installation, thanks to Push-in connection technology
- Future-proof communication, thanks to PROFINET, EtherNet/IP™, and Modbus/TCP
- Compatible with IO-Link specification V1.1

new

8 IO-Link ports, 8 digital inputs

new

8 IO-Link ports, 8 digital inputs

		Technical data	Technical data
Interface			
Fieldbus system		PROFINET	EtherNet/IP™
Connection method		RJ45 socket	RJ45 socket
Transmission speed		10/100 Mbps (with auto negotiation)	10/100 Mbps (with auto negotiation)
Power supply for module electronics			
Supply voltage		24 V DC	24 V DC
Supply voltage range		18 V DC ... 30 V DC	18 V DC ... 30 V DC
Current consumption		3.7 A	3.7 A
Digital inputs			
Connection technology		3-conductor	3-conductor
Number of inputs		8	8
IO-Link ports			
Connection technology		3-conductor	3-conductor
Number of ports		8	8
IO-Link port supply L+			
Nominal voltage for I/O supply		24 V DC	24 V DC
Nominal current per IO-Link port		max. 200 mA (at C/Q) max. 200 mA (at L+/L-)	max. 200 mA (at C/Q) max. 200 mA (at L+/L-)
Protective circuit		Overload protection yes	Overload protection yes
General data			
Connection method		Push-in technology	Push-in technology
Connection data rigid / flexible / AWG		0.2 ... 2.5 mm² / 0.2 ... 2.5 mm² / 24 - 14	0.2 ... 2.5 mm² / 0.2 ... 2.5 mm² / 24 - 14
Weight		225 g	225 g
Dimensions	W / H / D	45 mm / 114.5 mm / 99 mm	45 mm / 114.5 mm / 99 mm
EMC note		Class A product, see page 527	Class A product, see page 527

	Ordering data			Ordering data		
Description	Type	Order No.	Pcs./Pkt.	Type	Order No.	Pcs./Pkt.
Stand-alone IO-Link master						
- For PROFINET	**IOL MA8 PN DI8**	1072838	1			
- For EtherNet/IP™				**IOL MA8 EIP DI8**	1072839	1

Inline Block IO

Distributed I/O system with a block design

The space-saving extension to the modular Inline I/O system: compact and flat Inline Block IO modules.

Pre-assembled devices with a block design can be used to integrate a fixed number of I/Os into your network or bus system. Significant benefits can be achieved in terms of handling and costs for low numbers of I/Os in particular, as I/O modules and bus couplers are combined in a single device.

Your advantages:

- Particularly space saving: just 55 mm tall and 95 or 156 mm wide
- Manage low numbers of I/Os cost-effectively
- Time savings as no configuration is required and installation is easy
- Separate module, sensor, and actuator supply increases system availability

	Ordering data		
Description	Type	Order No.	Pcs./Pkt.
Inline Block IO digital I/O module for Modbus/TCP			
- 16 fixed inputs, 16 freely selectable inputs/outputs	**ILB ETH 24 DI16 DIO16-2TX**	2832962	1
Inline Block IO digital I/O module for PROFINET			
- 16 fixed inputs, 16 freely selectable inputs/outputs	**ILB PN 24 DI16 DIO16-EF**	2702289	1
Inline Block IO analog and digital I/O modules for INTERBUS			
- 32 inputs	**ILB IB 24 DI32**	2862343	1
- 16 outputs	**ILB IB 24 DO16**	2862356	1
- 32 outputs	**ILB IB 24 DO32**	2862369	1
- 16 inputs, 16 outputs	**ILB IB 24 DI16 DO16**	2862385	1
- 16 inputs, 16 outputs, D-SUB bus connection	**ILB IB 24 DI16 DO16-DSUB**	2878625	1
Inline Block IO analog and digital I/O modules for PROFIBUS			
- 8 inputs, 8 inputs or outputs	**ILB PB 24 DI 8 DIO8**	2863562	1
- 16 inputs, 16 outputs	**ILB PB 24 DI16 DO16**	2862411	1
- 32 inputs	**ILB PB 24 DI32**	2862398	1

INTERBUS ST

Distributed I/O system with a modular design

INTERBUS ST (Smart Terminal) modules are used for medium to high numbers of I/Os – they connect sensors and actuators to INTERBUS, either distributed in the terminal box or centrally in the control cabinet.

Your advantages:

- Different connection methods increase flexibility when selecting the transmission medium
- Replaceable module electronics ensure reliable operation
- Adaptation to your individual needs, thanks to the modular design and connecting the modules as desired

	Ordering data		
Description	Type	Order No.	Pcs./Pkt.
INTERBUS ST BK modules			
- D-SUB connector, 9-pos.	IBS ST 24 BK-T	2754341	1
- MINI COMBICON connector, 8-pos.	IBS ST 24 BKM-T	2750154	1
- Fiber optic F-SMA connector, optical path diagnostics	IBS ST 24 BKM-LK-OPC	2728665	1
- Additional remote bus branch, D-SUB connector	IBS ST 24 BK RB-T	2753504	1
- Additional local bus branch	IBS ST 24 BK LB-T	2753232	1
- D-SUB connector, 9-pos., 8 digital input and outputs each	IBS ST 24 BK DIO 8/8/3-T	2752411	1
INTERBUS ST digital modules			
- 16 inputs	IB ST 24 DI 16/4	2754338	1
- 32 inputs	IB ST 24 DI32/2	2754927	1
- 32 outputs	IB ST 24 DO32/2	2754325	1
- 16 relay N/O contact outputs	IB ST 24 DO16R/S	2721112	1
- 8 inputs, 8 outputs, 2 A	IB ST 24 DIO 8/8/3-2A	2753708	1
INTERBUS ST analog modules			
- 4 inputs, 0 - 20 mA, 4 - 20 mA, 0 - 10 V, ±10 V	IB ST 24 AI 4/EF	2700838	1
- 8 inputs, 0 - 20 mA, 4 - 20 mA, 0 - 10 V, etc.	IB ST 24 BAI 8/EF	2700842	1
- 4 inputs, RTD, Pt 100, Pt 1000, etc.	IB ST 24 TEMP 4 RTD	2700843	1
- 4 outputs, 0 - 20 mA, 4 - 20 mA, 0 - 10 V	IB ST 24 AO 4/EF	2700839	1

For field installation (IP65/IP67) – Axioline E

Product overview

Axioline E I/O modules, M12

	Robust metal housing				
	Digital input	Digital input/output			IO-Link Digital input
	16 channels	16 freely configurable channels	8 / 8 channels	8 / 4 channels	8 IO-Link ports 4 channels
EtherCAT	Page 168	Page 169			
EtherNet/IP	Page 170	Page 171			
Modbus/TCP (UDP)	Page 172	Page 173			
PROFINET	Page 174	Page 175			
sercos the automation bus	Page 176	Page 177			
PROFIBUS	Page 178	Page 179			

Axioline E I/O modules, M12

	Plastic housing				
	Digital input	Digital input/output			IO-Link Digital input
	16 channels	16 freely configurable channels	8 / 8 channels	8 / 4 channels	8 IO-Link ports 4 channels
EtherCAT	Page 168	Page 169			
EtherNet/IP	Page 170	Page 171			
Modbus/TCP (UDP)	Page 172	Page 173			
PROFINET	Page 174	Page 175			
sercos the automation bus	Page 176	Page 177			
PROFIBUS	Page 178	Page 179			

IO-Link master for the control cabinet (IP20)

Axioline F	Stand-alone
IO-Link	IO-Link
8 IO-Link A ports	8 IO-Link A ports
Page 89	Page 162

Axioline E IO-Link devices, M12

IO-Link

I/O boxes	
Digital input	Digital output
1 IO-Link A port 8 / 16 channels	1 IO-Link B port 8 channels
Page 180	Page 180

IO-Link

IO-Link/analog converters
Temperature measurement
1 IO-Link A port 4 channels TC, type K
Page 181

IO-Link

IO-Link/analog converters in straight or angled format				
Analog input		Analog output		Temperature measurement
1 channel Current input	1 channel Voltage input	1 channel Current output	1 channel Voltage output	1 channel RTD
Page 182		Page 183		

General accessories

UCT-EM (7X10)	SACB-4/T-L-8FUSE DIAG CT AXL	SACC-M12...	SAC-4P...	PROT-M12 SH
Snap-in markers, unmarked	M12 distributor for power connectors	M12 POWER connectors	M12 SPEEDCON power cable	M12 locking screws
phoenixcontact.net/products		Page 184	Page 185	phoenixcontact.net/products

General technical data

Ambient conditions	
Temperature range (operation)	-25°C ... +60°C
Permissible humidity (storage/transport)	95%
Vibration	5g in accordance with EN 60068-2-6 / IEC 60068-2-6
Shock	30g in accordance with EN 60068-2-27 / IEC 60068-2-27
Continuous shock	10g in accordance with EN 60068-2-27 / IEC 60068-2-27
Degree of protection	IP65/IP67 in accordance with IEC 60529

Electromagnetic compatibility	
Noise emission	Class A in accordance with EN 61000-6-4

EtherCAT®
Digital I/O devices – Stand-Alone

The I/O devices with a block design are used to acquire and output various signals.

Features:
- Robust metal or plastic housing
- Seamless connection via M12 connectors
- SPEEDCON fast locking system
- Maximum current carrying capacity of the supply: 12 A
- Diagnostic and status indicators
- Short-circuit and overload protection

Additional features
IO-Link master:
- In accordance with specification 1.1
- 4 digital inputs,
  4 IO-Link ports Class A,
  4 IO-Link ports Class B on one device

EtherCAT

16 digital inputs

EtherCAT

16 freely configurable inputs or outputs

EtherCAT
Ex:

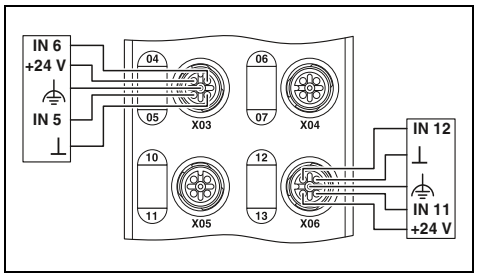

EtherCAT
Ex:

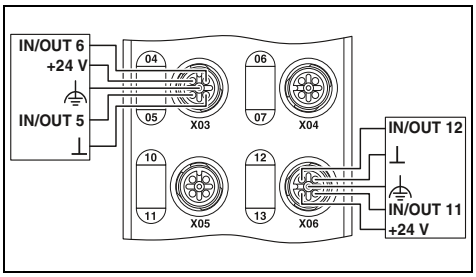

		Technical data		Technical data	
		AXL E EC DI16 M12 6M	AXL E EC DI16 M12 6P	AXL E EC DIO16 M12 6M	AXL E EC DIO16 M12 6P
Interface					
Fieldbus system		EtherCAT®		EtherCAT®	
Connection method		M12 fast connection technology		M12 fast connection technology	
Transmission speed		100 Mbps (with auto negotiation)		100 Mbps (with auto negotiation)	
Power supply for module electronics					
Supply voltage		24 V DC		24 V DC	
Supply voltage range		18 V DC ... 31.2 V DC (including all tolerances, including ripple)		18 V DC ... 31.2 V DC (including all tolerances, including ripple)	
Connection method		M12 connector (T-coded)		M12 connector (T-coded)	
Digital inputs					
Connection method		M12 connector, double occupancy		M12 connector, double occupancy	
Connection technology		4-conductor		4-conductor	
Number of inputs		16		16	
Input filter time		< 1000 µs		< 1000 µs	
Protective circuit		Overload protection, short-circuit protection of sensor supply		Overload protection, short-circuit protection of sensor supply	
Digital outputs					
Connection method		-		M12 connector, double occupancy	
Connection technology		-		3-conductor	
Number of outputs		-		16	
Maximum output current per channel		-		500 mA	
Protective circuit		-		Overload protection, short-circuit protection of outputs	
IO-Link ports					
Connection method		-		-	
Connection technology		-		-	
Number of ports		-		-	
IO-Link port supply L+					
Nominal voltage for I/O supply		-		-	
Nominal current per IO-Link port		-		-	
Protective circuit		-		-	
General data					
Weight		750 g	480 g	750 g	480 g
Dimensions	W / H / D	60 mm / 185 mm / 38 mm	60 mm / 185 mm / 30.5 mm	60 mm / 185 mm / 38 mm	60 mm / 185 mm / 30.5 mm
Degree of protection		IP65/IP67		IP65/IP67	

	Ordering data			Ordering data		
Description	Type	Order No.	Pcs./Pkt.	Type	Order No.	Pcs./Pkt.
Axioline E I/O device						
- Robust metal housing	**AXL E EC DI16 M12 6M**	2701526	1	**AXL E EC DIO16 M12 6M**	2701528	1
- Plastic housing	**AXL E EC DI16 M12 6P**	2701521	1	**AXL E EC DIO16 M12 6P**	2701522	1

EtherCAT

8 digital inputs and 8 digital outputs

EtherCAT

8 digital inputs and 4 digital outputs

EtherCAT
IO-Link

8 IO-Link ports, 4 digital inputs

EtherCAT
Ex:

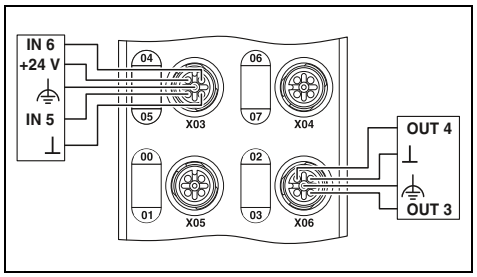

EtherCAT
Ex:

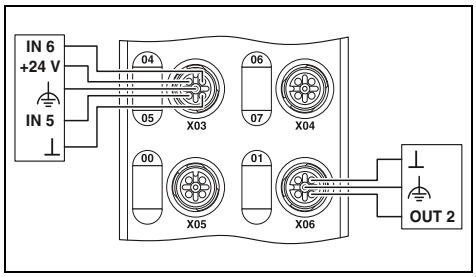

EtherCAT
Ex:

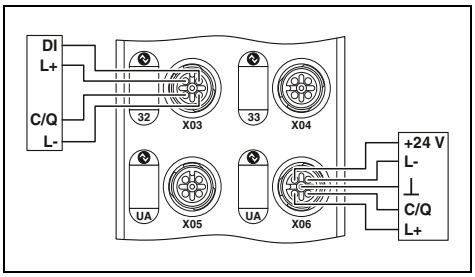

Technical data

AXL E EC DI8 DO8 M12 6M	AXL E EC DI8 DO8 M12 6P
EtherCAT® M12 fast connection technology 100 Mbps (with auto negotiation)	
24 V DC 18 V DC ... 31.2 V DC (including all tolerances, including ripple) M12 connector (T-coded)	
M12 connector, double occupancy 4-conductor 8 < 1000 µs Overload protection, short-circuit protection of sensor supply	
M12 connector, double occupancy 3-conductor 8 500 mA Overload protection, short-circuit protection of outputs	
- - -	
- - -	
750 g 60 mm / 185 mm / 38 mm	480 g 60 mm / 185 mm / 30.5 mm
IP65/IP67	

Ordering data

Type	Order No.	Pcs./Pkt.
AXL E EC DI8 DO8 M12 6M	2701525	1
AXL E EC DI8 DO8 M12 6P	2701520	1

Technical data

AXL E EC DI8 DO4 2A M12 6M	AXL E EC DI8 DO4 2A M12 6P
EtherCAT® M12 fast connection technology 100 Mbps (with auto negotiation)	
24 V DC 18 V DC ... 31.2 V DC (including all tolerances, including ripple) M12 connector (T-coded)	
M12 connector, double occupancy 4-conductor 8 < 1000 µs Overload protection, short-circuit protection of sensor supply	
M12 connector, (A-coded) 3-conductor 4 2 A Overload protection, short-circuit protection of outputs	
- - -	
- - -	
750 g 60 mm / 185 mm / 38 mm	480 g 60 mm / 185 mm / 30.5 mm
IP65/IP67	

Ordering data

Type	Order No.	Pcs./Pkt.
AXL E EC DI8 DO4 2A M12 6M	2701529	1
AXL E EC DI8 DO4 2A M12 6P	2701523	1

Technical data

AXL E EC IOL8 DI4 M12 6M	AXL E EC IOL8 DI4 M12 6P
EtherCAT® M12 fast connection technology 100 Mbps (with auto negotiation)	
24 V DC 19.5 V DC ... 31.2 V DC (including all tolerances, including ripple) M12 connector (T-coded)	
M12 connector, X01 ... X04 have double occupancy 3-conductor 4 < 1000 µs Overload protection, short-circuit protection of sensor supply	
- - - - -	
M12 fast connection technology 3-conductor 4 (Class A) / 4 (Class B)	
24 V DC max. 150 mA (at C/Q (pin 4), maximum of 1.6 A over all 8 IO-Link C/Q and L+ cables) max. 200 mA (at L+/L- (pin 1 and pin 3), during startup, up to 1.6 A for short periods) max. 2 A (at U_A (IO-Link B ports, pin 2 and pin 5)) Overload protection yes	
750 g 60 mm / 185 mm / 38 mm	480 g 60 mm / 185 mm / 30.5 mm
IP65/IP67	

Ordering data

Type	Order No.	Pcs./Pkt.
AXL E EC IOL8 DI4 M12 6M	2701531	1
AXL E EC IOL8 DI4 M12 6P	2701524	1

EtherNet/IP™
Digital I/O devices – Stand-Alone

The I/O devices with a block design are used to acquire and output various signals.

Features:
- Robust metal or plastic housing
- Seamless connection via M12 connectors
- SPEEDCON fast locking system
- Maximum current carrying capacity of the supply: 12 A
- Diagnostic and status indicators
- Short-circuit and overload protection

Additional features
IO-Link master:
- In accordance with specification 1.1
- 4 digital inputs,
  4 IO-Link ports Class A,
  4 IO-Link ports Class B on one device

EtherNet/IP

16 digital inputs

EtherNet/IP

16 freely configurable inputs or outputs

Ex:

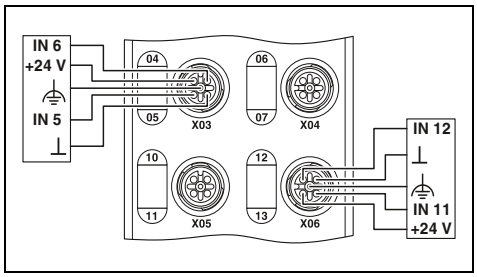

Ex:

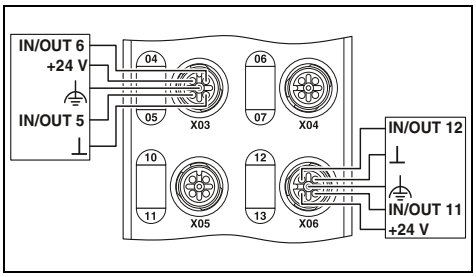

		Technical data		Technical data	
		AXL E EIP DI16 M12 6M	AXL E EIP DI16 M12 6P	AXL E EIP DIO16 M12 6M	AXL E EIP DIO16 M12 6P
Interface					
Fieldbus system		EtherNet/IP™		EtherNet/IP™	
Connection method		M12 fast connection technology		M12 fast connection technology	
Transmission speed		10/100 Mbps (with auto negotiation)		10/100 Mbps (with auto negotiation)	
Power supply for module electronics					
Supply voltage		24 V DC		24 V DC	
Supply voltage range		18 V DC ... 31.2 V DC (including all tolerances, including ripple)		18 V DC ... 31.2 V DC (including all tolerances, including ripple)	
Connection method		M12 connector (T-coded)		M12 connector (T-coded)	
Digital inputs					
Connection method		M12 connector, double occupancy		M12 connector, double occupancy	
Connection technology		4-conductor		4-conductor	
Number of inputs		16		16	
Input filter time		< 1000 µs		< 1000 µs	
Protective circuit		Overload protection, short-circuit protection of sensor supply		Overload protection, short-circuit protection of sensor supply	
Digital outputs					
Connection method		-		M12 connector, double occupancy	
Connection technology		-		3-conductor	
Number of outputs		-		16	
Maximum output current per channel		-		500 mA	
Protective circuit		-		Overload protection, short-circuit protection of outputs	
IO-Link ports					
Connection method		-		-	
Connection technology		-		-	
Number of ports		-		-	
IO-Link port supply L+					
Nominal voltage for I/O supply		-		-	
Nominal current per IO-Link port		-		-	
Protective circuit		-		-	
General data					
Weight		750 g	480 g	750 g	480 g
Dimensions	W / H / D	60 mm / 185 mm / 38 mm	60 mm / 185 mm / 30.5 mm	60 mm / 185 mm / 38 mm	60 mm / 185 mm / 30.5 mm
Degree of protection		IP65/IP67		IP65/IP67	
EMC note		Class A product, see page 527		Class A product, see page 527	

	Ordering data			Ordering data		
Description	Type	Order No.	Pcs./Pkt.	Type	Order No.	Pcs./Pkt.
Axioline E I/O device						
- Robust metal housing	**AXL E EIP DI16 M12 6M**	2701488	1	**AXL E EIP DIO16 M12 6M**	2701489	1
- Plastic housing	**AXL E EIP DI16 M12 6P**	2701493	1	**AXL E EIP DIO16 M12 6P**	2701494	1

EtherNet/IP

8 digital inputs and 8 digital outputs

Ex:

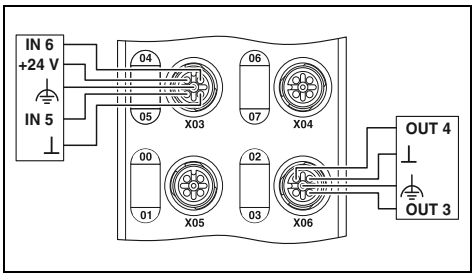

Technical data

AXL E EIP DI8 DO8 M12 6M	AXL E EIP DI8 DO8 M12 6P
EtherNet/IP™ M12 fast connection technology 10/100 Mbps (with auto negotiation)	
24 V DC 18 V DC ... 31.2 V DC (including all tolerances, including ripple)	
M12 connector (T-coded)	
M12 connector, double occupancy	
4-conductor 8 < 1000 µs Overload protection, short-circuit protection of sensor supply	
M12 connector, double occupancy 3-conductor 8 500 mA Overload protection, short-circuit protection of outputs	
- - -	
- -	
-	
750 g 60 mm / 185 mm / 38 mm	480 g 60 mm / 185 mm / 30.5 mm
IP65/IP67 Class A product, see page 527	

Ordering data

Type	Order No.	Pcs./Pkt.
AXL E EIP DI8 DO8 M12 6M	2701487	1
AXL E EIP DI8 DO8 M12 6P	2701492	1

EtherNet/IP

8 digital inputs and 4 digital outputs

Ex:

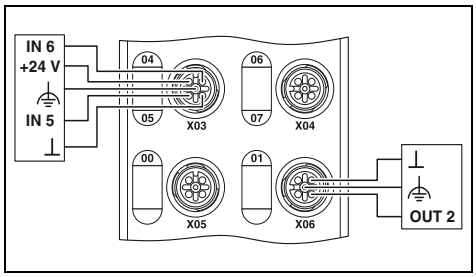

Technical data

AXL E EIP DI8 DO4 2A M12 6M	AXL E EIP DI8 DO4 2A M12 6P
EtherNet/IP™ M12 fast connection technology 10/100 Mbps (with auto negotiation)	
24 V DC 18 V DC ... 31.2 V DC (including all tolerances, including ripple)	
M12 connector (T-coded)	
M12 connector, double occupancy	
4-conductor 8 < 1000 µs Overload protection, short-circuit protection of sensor supply	
M12 connector, (A-coded) 3-conductor 4 2 A Overload protection, short-circuit protection of outputs	
- - -	
- -	
-	
750 g 60 mm / 185 mm / 38 mm	480 g 60 mm / 185 mm / 30.5 mm
IP65/IP67 Class A product, see page 527	

Ordering data

Type	Order No.	Pcs./Pkt.
AXL E EIP DI8 DO4 2A M12 6M	2701490	1
AXL E EIP DI8 DO4 2A M12 6P	2701495	1

EtherNet/IP

IO-Link

8 IO-Link ports, 4 digital inputs

Ex:

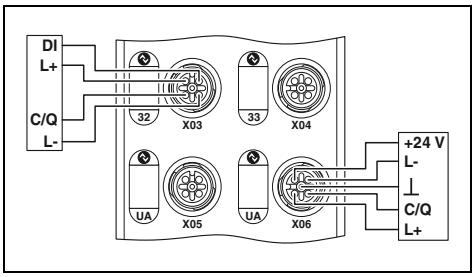

Technical data

AXL E EIP IOL8 DI4 M12 6M	AXL E EIP IOL8 DI4 M12 6P
EtherNet/IP™ M12 fast connection technology 10/100 Mbps (with auto negotiation)	
24 V DC 19.5 V DC ... 31.2 V DC (including all tolerances, including ripple)	
M12 connector (T-coded)	
M12 connector, X01 ... X04 have double occupancy	
3-conductor 4 < 1000 µs Overload protection, short-circuit protection of sensor supply	
- - - - -	
M12 fast connection technology 3-conductor 4 (Class A) / 4 (Class B)	
24 V DC max. 150 mA (at C/Q (pin 4), maximum of 1.6 A over all 8 IO-Link C/Q and L+ cables) max. 200 mA (at L+/L- (pin 1 and pin 3), during startup, up to 1.6 A for short periods) max. 2 A (at U_A (IO-Link B ports, pin 2 and pin 5))	
Overload protection Electronic	Overload protection yes
750 g 60 mm / 185 mm / 38 mm	480 g 60 mm / 185 mm / 30.5 mm
IP65/IP67 Class A product, see page 527	

Ordering data

Type	Order No.	Pcs./Pkt.
AXL E EIP IOL8 DI4 M12 6M	2701491	1
AXL E EIP IOL8 DI4 M12 6P	2701496	1

Modbus/TCP
Digital I/O devices – Stand-Alone

The I/O devices with a block design are used to acquire and output various signals.

Features:
- Robust metal or plastic housing
- Seamless connection via M12 connectors
- SPEEDCON fast locking system
- Maximum current carrying capacity of the supply: 12 A
- Diagnostic and status indicators
- Short-circuit and overload protection

Additional features
IO-Link master:
- In accordance with specification 1.1
- 4 digital inputs,
  4 IO-Link ports Class A,
  4 IO-Link ports Class B on one device

Modbus/TCP (UDP)

16 digital inputs

Modbus/TCP (UDP)

16 freely configurable inputs or outputs

Ex:

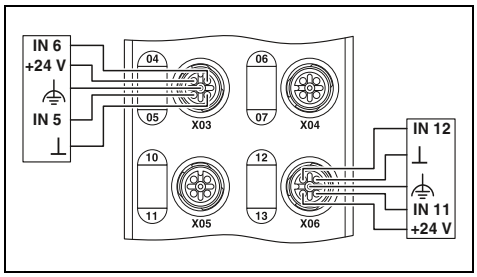

Ex:

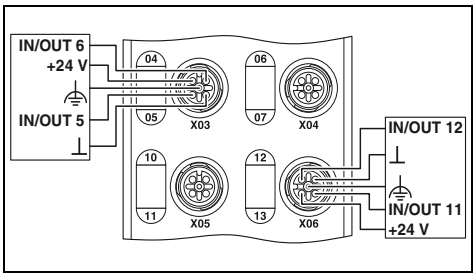

		Technical data		Technical data	
		AXL E ETH DI16 M12 6M	AXL E ETH DI16 M12 6P	AXL E ETH DIO16 M12 6M	AXL E ETH DIO16 M12 6P
Interface					
Fieldbus system		Ethernet		Ethernet	
Connection method		M12 fast connection technology		M12 fast connection technology	
Transmission speed		10/100 Mbps (with auto negotiation)		10/100 Mbps (with auto negotiation)	
Power supply for module electronics					
Supply voltage		24 V DC		24 V DC	
Supply voltage range		18 V DC ... 31.2 V DC (including all tolerances, including ripple)		18 V DC ... 31.2 V DC (including all tolerances, including ripple)	
Connection method		M12 connector (T-coded)		M12 connector (T-coded)	
Digital inputs					
Connection method		M12 connector, double occupancy		M12 connector, double occupancy	
Connection technology		4-conductor		4-conductor	
Number of inputs		16		16	
Input filter time		< 1000 µs		< 1000 µs	
Protective circuit		Overload protection, short-circuit protection of sensor supply		Overload protection, short-circuit protection of sensor supply	
Digital outputs					
Connection method		-		M12 connector, double occupancy	
Connection technology		-		3-conductor	
Number of outputs		-		16	
Maximum output current per channel		-		500 mA	
Protective circuit		-		Overload protection, short-circuit protection of outputs	
IO-Link ports					
Connection method		-		-	
Connection technology		-		-	
Number of ports		-		-	
IO-Link port supply L+					
Nominal voltage for I/O supply		-		-	
Nominal current per IO-Link port		-		-	
Protective circuit		-		-	
General data					
Weight		750 g	480 g	750 g	480 g
Dimensions	W / H / D	60 mm / 185 mm / 38 mm	60 mm / 185 mm / 30.5 mm	60 mm / 185 mm / 38 mm	60 mm / 185 mm / 30.5 mm
Degree of protection		IP65/IP67		IP65/IP67	
EMC note		Class A product, see page 527		Class A product, see page 527	

	Ordering data			Ordering data		
Description	Type	Order No.	Pcs./Pkt.	Type	Order No.	Pcs./Pkt.
Axioline E I/O device						
- Robust metal housing	**AXL E ETH DI16 M12 6M**	2701538	1	**AXL E ETH DIO16 M12 6M**	2701539	1
- Plastic housing	**AXL E ETH DI16 M12 6P**	2701533	1	**AXL E ETH DIO16 M12 6P**	2701534	1

Modbus/TCP (UDP)

8 digital inputs and 8 digital outputs

Ex:

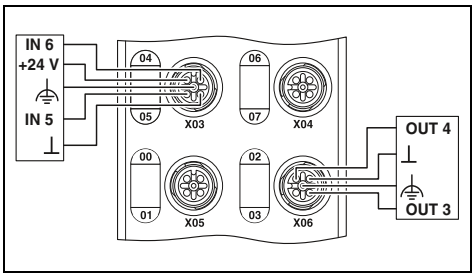

Technical data

AXL E ETH DI8 DO8 M12 6M	AXL E ETH DI8 DO8 M12 6P
Ethernet M12 fast connection technology 10/100 Mbps (with auto negotiation)	
24 V DC 18 V DC ... 31.2 V DC (including all tolerances, including ripple)	
M12 connector (T-coded)	
M12 connector, double occupancy	
4-conductor 8 < 1000 µs Overload protection, short-circuit protection of sensor supply	
M12 connector, double occupancy 3-conductor 8 500 mA Overload protection, short-circuit protection of outputs	
- - -	
- - -	
750 g 60 mm / 185 mm / 38 mm	480 g 60 mm / 185 mm / 30.5 mm
IP65/IP67 Class A product, see page 527	

Ordering data

Type	Order No.	Pcs./Pkt.
AXL E ETH DI8 DO8 M12 6M	2701537	1
AXL E ETH DI8 DO8 M12 6P	2701532	1

Modbus/TCP (UDP)

8 digital inputs and 4 digital outputs

Ex:

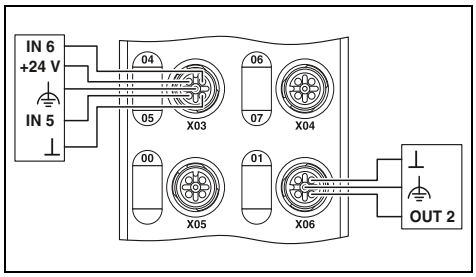

Technical data

AXL E ETH DI8 DO4 2A M12 6M	AXL E ETH DI8 DO4 2A M12 6P
Ethernet M12 fast connection technology 10/100 Mbps (with auto negotiation)	
24 V DC 18 V DC ... 31.2 V DC (including all tolerances, including ripple)	
M12 connector (T-coded)	
M12 connector, double occupancy	
4-conductor 8 < 1000 µs Overload protection, short-circuit protection of sensor supply	
M12 connector, (A-coded) 3-conductor 4 2 A Overload protection, short-circuit protection of outputs	
- - -	
- -	
750 g 60 mm / 185 mm / 38 mm	480 g 60 mm / 185 mm / 30.5 mm
IP65/IP67 Class A product, see page 527	

Ordering data

Type	Order No.	Pcs./Pkt.
AXL E ETH DI8 DO4 2A M12 6M	2701540	1
AXL E ETH DI8 DO4 2A M12 6P	2701535	1

Modbus/TCP (UDP)

IO-Link

8 IO-Link ports, 4 digital inputs

Ex:

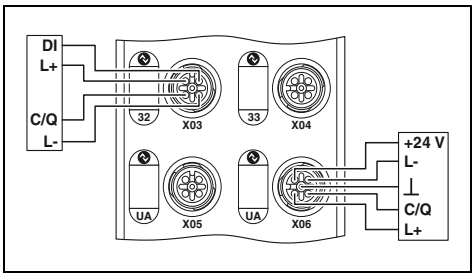

Technical data

AXL E ETH IOL8 DI4 M12 6M	AXL E ETH IOL8 DI4 M12 6P
Ethernet M12 fast connection technology 10/100 Mbps (with auto negotiation)	
24 V DC 19.5 V DC ... 31.2 V DC (including all tolerances, including ripple)	
M12 connector (T-coded)	
M12 connector, X01 ... X04 have double occupancy	
3-conductor 4 < 1000 µs Overload protection, short-circuit protection of sensor supply	
- - - - -	
M12 fast connection technology 3-conductor 4 (Class A) / 4 (Class B)	
24 V DC max. 150 mA (at C/Q (pin 4), maximum of 1.6 A over all 8 IO-Link C/Q and L+ cables) max. 200 mA (at L+/L- (pin 1 and pin 3), during startup, up to 1.6 A for short periods) max. 2 A (at U_A (IO-Link B ports, pin 2 and pin 5)) Overload protection yes	
750 g 60 mm / 185 mm / 38 mm	480 g 60 mm / 185 mm / 30.5 mm
IP65/IP67 Class A product, see page 527	

Ordering data

Type	Order No.	Pcs./Pkt.
AXL E ETH IOL8 DI4 M12 6M	2701541	1
AXL E ETH IOL8 DI4 M12 6P	2701536	1

PROFINET
Digital I/O devices – Stand-Alone

The I/O devices with a block design are used to acquire and output various signals.

Features:
- Robust metal or plastic housing
- Seamless connection via M12 connectors
- SPEEDCON fast locking system
- Maximum current carrying capacity of the supply: 12 A
- Diagnostic and status indicators
- Short-circuit and overload protection

Additional features
IO-Link master:
- In accordance with specification 1.1
- 4 digital inputs,
  4 IO-Link ports Class A,
  4 IO-Link ports Class B on one device

16 digital inputs

16 freely configurable inputs or outputs

Ex:

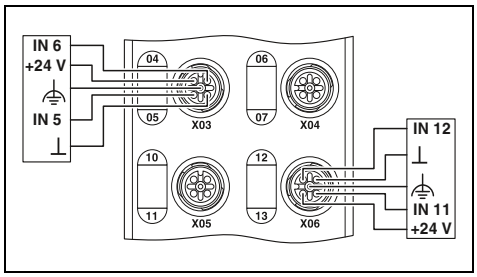

Ex:

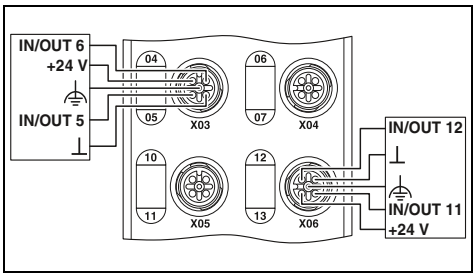

		Technical data		Technical data	
		AXL E PN DI16 M12 6M	AXL E PN DI16 M12 6P	AXL E PN DIO16 M12 6M	AXL E PN DIO16 M12 6P
Interface					
Fieldbus system		PROFINET		PROFINET	
Connection method		M12 fast connection technology		M12 fast connection technology	
Transmission speed		100 Mbps (with auto negotiation)		100 Mbps (with auto negotiation)	
Power supply for module electronics					
Supply voltage		24 V DC		24 V DC	
Supply voltage range		18 V DC ... 31.2 V DC (including all tolerances, including ripple)		18 V DC ... 31.2 V DC (including all tolerances, including ripple)	
Connection method		M12 connector (T-coded)		M12 connector (T-coded)	
Digital inputs					
Connection method		M12 connector, double occupancy		M12 connector, double occupancy	
Connection technology		4-conductor		4-conductor	
Number of inputs		16		16	
Input filter time		< 1000 µs		< 1000 µs	
Protective circuit		Overload protection, short-circuit protection of sensor supply		Overload protection, short-circuit protection of sensor supply	
Digital outputs					
Connection method		-		M12 connector, double occupancy	
Connection technology		-		3-conductor	
Number of outputs		-		16	
Maximum output current per channel		-		500 mA	
Protective circuit		-		Overload protection, short-circuit protection of outputs	
IO-Link ports					
Connection method		-		-	
Connection technology		-		-	
Number of ports		-		-	
IO-Link port supply L+					
Nominal voltage for I/O supply		-		-	
Nominal current per IO-Link port		-		-	
Protective circuit		-		-	
General data					
Weight		750 g	480 g	750 g	480 g
Dimensions	W / H / D	60 mm / 185 mm / 38 mm	60 mm / 185 mm / 30.5 mm	60 mm / 185 mm / 38 mm	60 mm / 185 mm / 30.5 mm
Degree of protection		IP65/IP67		IP65/IP67	
EMC note		Class A product, see page 527		Class A product, see page 527	

	Ordering data			Ordering data		
Description	Type	Order No.	Pcs./Pkt.	Type	Order No.	Pcs./Pkt.
Axioline E I/O device						
- Robust metal housing	**AXL E PN DI16 M12 6M**	2701516	1	**AXL E PN DIO16 M12 6M**	2701517	1
- Plastic housing	**AXL E PN DI16 M12 6P**	2701510	1	**AXL E PN DIO16 M12 6P**	2701511	1

8 digital inputs and 8 digital outputs

8 digital inputs and 4 digital outputs

8 IO-Link ports, 4 digital inputs

Ex:

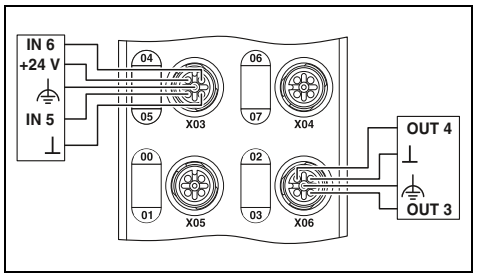

Ex:

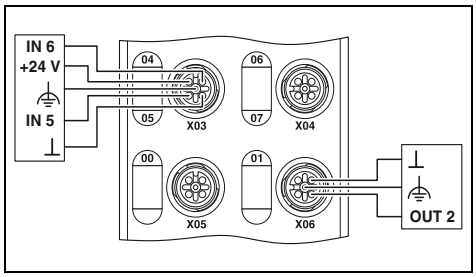

Ex:

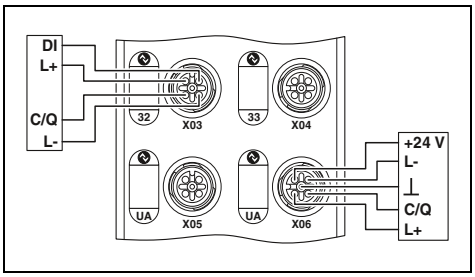

Technical data

AXL E PN DI8 DO8 M12 6M	AXL E PN DI8 DO8 M12 6P	AXL E PN DI8 DO4 2A M12 6M	AXL E PN DI8 DO4 2A M12 6P
PROFINET M12 fast connection technology 100 Mbps (with auto negotiation)		PROFINET M12 fast connection technology 100 Mbps (with auto negotiation)	
24 V DC 18 V DC ... 31.2 V DC (including all tolerances, including ripple)		24 V DC 18 V DC ... 31.2 V DC (including all tolerances, including ripple)	
M12 connector (T-coded)		M12 connector (T-coded)	
M12 connector, double occupancy		M12 connector, double occupancy	
4-conductor 8 < 1000 µs Overload protection, short-circuit protection of sensor supply		4-conductor 8 < 1000 µs Overload protection, short-circuit protection of sensor supply	
M12 connector, double occupancy 3-conductor 8 500 mA Overload protection, short-circuit protection of outputs		M12 connector, (A-coded) 3-conductor 4 2 A Overload protection, short-circuit protection of outputs	
- - -		- - -	
- -		- -	
-		-	
750 g 60 mm / 185 mm / 38 mm	480 g 60 mm / 185 mm / 30.5 mm	750 g 60 mm / 185 mm / 38 mm	480 g 60 mm / 185 mm / 30.5 mm
IP65/IP67		IP65/IP67	
Class A product, see page 527		Class A product, see page 527	

Technical data

AXL E PN IOL8 DI4 M12 6M	AXL E PN IOL8 DI4 M12 6P
PROFINET M12 fast connection technology 100 Mbps (with auto negotiation)	
24 V DC 19.5 V DC ... 31.2 V DC (including all tolerances, including ripple)	
M12 connector (T-coded)	
M12 connector, X01 ... X04 have double occupancy	
3-conductor 4 < 1000 µs Overload protection, short-circuit protection of sensor supply	
- - - - -	
M12 fast connection technology 3-conductor 4 (Class A) / 4 (Class B)	
24 V DC max. 150 mA (at C/Q (pin 4), maximum of 1.6 A over all 8 IO-Link C/Q and L+ cables) max. 200 mA (at L+/L- (pin 1 and pin 3), during startup, up to 1.6 A for short periods) max. 2 A (at U_A (IO-Link B ports, pin 2 and pin 5)) Overload protection yes	
750 g 60 mm / 185 mm / 38 mm	480 g 60 mm / 185 mm / 30.5 mm
IP65/IP67	
Class A product, see page 527	

Ordering data

Type	Order No.	Pcs./Pkt.
AXL E PN DI8 DO8 M12 6M	2701515	1
AXL E PN DI8 DO8 M12 6P	2701509	1

Ordering data

Type	Order No.	Pcs./Pkt.
AXL E PN DI8 DO4 2A M12 6M	2701518	1
AXL E PN DI8 DO4 2A M12 6P	2701512	1

Ordering data

Type	Order No.	Pcs./Pkt.
AXL E PN IOL8 DI4 M12 6M	2701519	1
AXL E PN IOL8 DI4 M12 6P	2701513	1

Sercos
Digital I/O devices – Stand-Alone

The I/O devices with a block design are used to acquire and output various signals.

Features:
- Robust metal or plastic housing
- Seamless connection via M12 connectors
- SPEEDCON fast locking system
- Maximum current carrying capacity of the supply: 12 A
- Diagnostic and status indicators
- Short-circuit and overload protection

Additional features
IO-Link master:
- In accordance with specification 1.1
- 4 digital inputs,
  4 IO-Link ports Class A,
  4 IO-Link ports Class B on one device

sercos the automation bus

16 digital inputs

sercos the automation bus

16 freely configurable inputs or outputs

Ex:

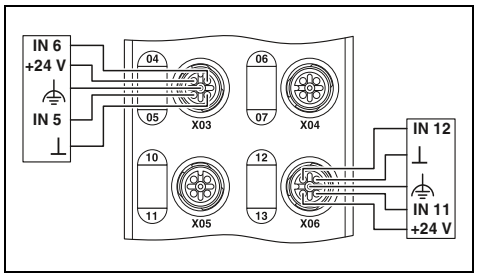

Ex:

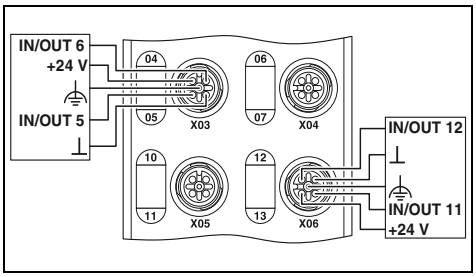

		Technical data		Technical data	
		AXL E S3 DI16 M12 6M	AXL E S3 DI16 M12 6P	AXL E S3 DIO16 M12 6M	AXL E S3 DIO16 M12 6P
Interface					
Fieldbus system		Sercos		Sercos	
Connection method		M12 fast connection technology		M12 fast connection technology	
Transmission speed		100 Mbps (with auto negotiation)		100 Mbps (with auto negotiation)	
Power supply for module electronics					
Supply voltage		24 V DC		24 V DC	
Supply voltage range		18 V DC ... 31.2 V DC (including all tolerances, including ripple)		18 V DC ... 31.2 V DC (including all tolerances, including ripple)	
Connection method		M12 connector (T-coded)		M12 connector (T-coded)	
Digital inputs					
Connection method		M12 connector, double occupancy		M12 connector, double occupancy	
Connection technology		4-conductor		4-conductor	
Number of inputs		16		16	
Input filter time		< 1000 µs		< 1000 µs	
Protective circuit		Overload protection, short-circuit protection of sensor supply		Overload protection, short-circuit protection of sensor supply	
Digital outputs					
Connection method		-		M12 connector, double occupancy	
Connection technology		-		3-conductor	
Number of outputs		-		16	
Maximum output current per channel		-		500 mA	
Protective circuit		-		Overload protection, short-circuit protection of outputs	
IO-Link ports					
Connection method		-		-	
Connection technology		-		-	
Number of ports		-		-	
IO-Link port supply L+					
Nominal voltage for I/O supply		-		-	
Nominal current per IO-Link port		-		-	
Protective circuit		-		-	
General data					
Weight		750 g	480 g	750 g	480 g
Dimensions	W / H / D	60 mm / 185 mm / 38 mm	60 mm / 185 mm / 30.5 mm	60 mm / 185 mm / 38 mm	60 mm / 185 mm / 30.5 mm
Degree of protection		IP65/IP67		IP65/IP67	
EMC note		Class A product, see page 527		Class A product, see page 527	

	Ordering data			Ordering data		
Description	Type	Order No.	Pcs./Pkt.	Type	Order No.	Pcs./Pkt.
Axioline E I/O device						
- Robust metal housing	**AXL E S3 DI16 M12 6M**	2701549	1	**AXL E S3 DIO16 M12 6M**	2701550	1
- Plastic housing	**AXL E S3 DI16 M12 6P**	2701544	1	**AXL E S3 DIO16 M12 6P**	2701545	1

sercos
the automation bus

8 digital inputs and 8 digital outputs

Ex:

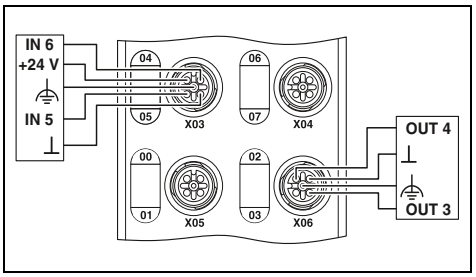

Technical data

AXL E S3 DI8 DO8 M12 6M	AXL E S3 DI8 DO8 M12 6P
Sercos M12 fast connection technology 100 Mbps (with auto negotiation)	
24 V DC 18 V DC ... 31.2 V DC (including all tolerances, including ripple)	
M12 connector (T-coded)	
M12 connector, double occupancy	
4-conductor 8 < 1000 µs Overload protection, short-circuit protection of sensor supply	
M12 connector, double occupancy 3-conductor 8 500 mA Overload protection, short-circuit protection of outputs	
- - -	
- -	
-	
750 g 60 mm / 185 mm / 38 mm	480 g 60 mm / 185 mm / 30.5 mm
IP65/IP67 Class A product, see page 527	

Ordering data

Type	Order No.	Pcs./Pkt.
AXL E S3 DI8 DO8 M12 6M	2701548	1
AXL E S3 DI8 DO8 M12 6P	2701542	1

sercos
the automation bus

8 digital inputs and 4 digital outputs

Ex:

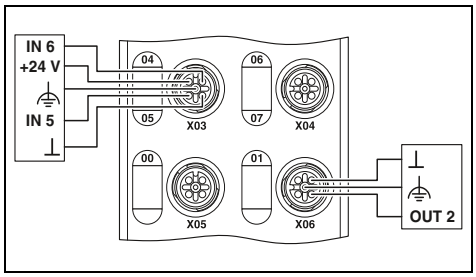

Technical data

AXL E S3 DI8 DO4 2A M12 6M	AXL E S3 DI8 DO4 2A M12 6P
Sercos M12 fast connection technology 100 Mbps (with auto negotiation)	
24 V DC 18 V DC ... 31.2 V DC (including all tolerances, including ripple)	
M12 connector (T-coded)	
M12 connector, double occupancy	
4-conductor 8 < 1000 µs Overload protection, short-circuit protection of sensor supply	
M12 connector, (A-coded) 3-conductor 4 2 A Overload protection, short-circuit protection of outputs	
- - -	
- -	
-	
750 g 60 mm / 185 mm / 38 mm	480 g 60 mm / 185 mm / 30.5 mm
IP65/IP67 Class A product, see page 527	

Ordering data

Type	Order No.	Pcs./Pkt.
AXL E S3 DI8 DO4 2A M12 6M	2701551	1
AXL E S3 DI8 DO4 2A M12 6P	2701546	1

sercos
the automation bus

IO-Link

8 IO-Link ports, 4 digital inputs

Ex:

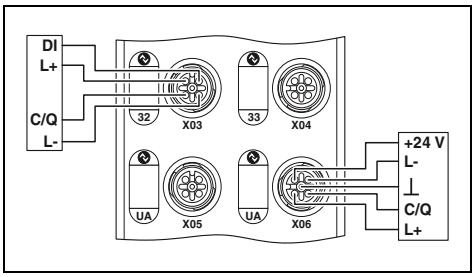

Technical data

AXL E S3 IOL8 DI4 M12 6M	AXL E S3 IOL8 DI4 M12 6P
Sercos M12 fast connection technology 100 Mbps (with auto negotiation)	
24 V DC 19.5 V DC ... 31.2 V DC (including all tolerances, including ripple)	
M12 connector (T-coded)	
M12 connector, X01 ... X04 have double occupancy	
3-conductor 4 < 1000 µs Overload protection, short-circuit protection of sensor supply	
- - - - -	
M12 fast connection technology 3-conductor 4 (Class A) / 4 (Class B)	
24 V DC max. 150 mA (at C/Q (pin 4), maximum of 1.6 A over all 8 IO-Link C/Q and L+ cables) max. 200 mA (at L+/L- (pin 1 and pin 3), during startup, up to 1.6 A for short periods) max. 2 A (at U_A (IO-Link B ports, pin 2 and pin 5)) Overload protection yes	
750 g 60 mm / 185 mm / 38 mm	480 g 60 mm / 185 mm / 30.5 mm
IP65/IP67 Class A product, see page 527	

Ordering data

Type	Order No.	Pcs./Pkt.
AXL E S3 IOL8 DI4 M12 6M	2701552	1
AXL E S3 IOL8 DI4 M12 6P	2701547	1

PROFIBUS DP
Digital I/O devices – Stand-Alone

The I/O devices with a block design are used to acquire and output various signals.

Features:
- Robust metal or plastic housing
- Seamless connection via M12 connectors
- SPEEDCON fast locking system
- Maximum current carrying capacity of the supply: 12 A
- Diagnostic and status indicators
- Short-circuit and overload protection

Additional features
IO-Link master:
- In accordance with specification 1.1
- 4 digital inputs,
  4 IO-Link ports Class A,
  4 IO-Link ports Class B on one device

16 digital inputs

16 freely configurable inputs or outputs

Ex:

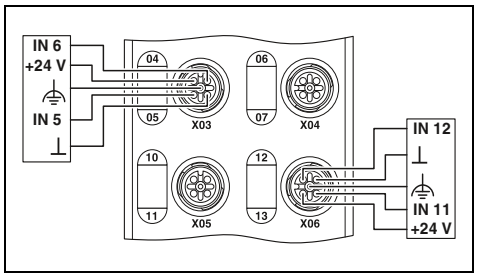

Ex:

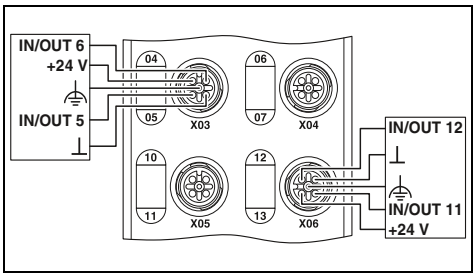

	Technical data		Technical data	
	AXL E PB DI16 M12 6M	AXL E PB DI16 M12 6P	AXL E PB DIO16 M12 6M	AXL E PB DIO16 M12 6P
Interface				
Fieldbus system	PROFIBUS DP		PROFIBUS DP	
Connection method	M12 fast connection technology		M12 fast connection technology	
Transmission speed	9.6 kbps ... 12 Mbps (automatic baud rate detection)		9.6 kbps ... 12 Mbps (automatic baud rate detection)	
Power supply for module electronics				
Supply voltage	24 V DC		24 V DC	
Supply voltage range	18 V DC ... 31.2 V DC (including all tolerances, including ripple)		18 V DC ... 31.2 V DC (including all tolerances, including ripple)	
Connection method	M12 connector (T-coded)		M12 connector (T-coded)	
Digital inputs				
Connection method	M12 connector, double occupancy		M12 connector, double occupancy	
Connection technology	4-conductor		4-conductor	
Number of inputs	16		16	
Input filter time	< 1000 µs		< 1000 µs	
Protective circuit	Overload protection, short-circuit protection of sensor supply		Overload protection, short-circuit protection of sensor supply	
Digital outputs				
Connection method	-		M12 connector, double occupancy	
Connection technology	-		3-conductor	
Number of outputs	-		16	
Maximum output current per channel	-		500 mA	
Protective circuit	-		Overload protection, short-circuit protection of outputs	
IO-Link ports				
Connection method	-		-	
Connection technology	-		-	
Number of ports	-		-	
IO-Link port supply L+				
Nominal voltage for I/O supply	-		-	
Nominal current per IO-Link port	-		-	
Protective circuit	-		-	
General data				
Weight	750 g	480 g	750 g	480 g
Dimensions W / H / D	60 mm / 185 mm / 38 mm	60 mm / 185 mm / 30.5 mm	60 mm / 185 mm / 38 mm	60 mm / 185 mm / 30.5 mm
Degree of protection	IP65/IP67		IP65/IP67	
EMC note	Class A product, see page 527		Class A product, see page 527	

	Ordering data			Ordering data		
Description	Type	Order No.	Pcs./Pkt.	Type	Order No.	Pcs./Pkt.
Axioline E I/O device						
- Robust metal housing	**AXL E PB DI16 M12 6M**	2701505	1	**AXL E PB DIO16 M12 6M**	2701506	1
- Plastic housing	**AXL E PB DI16 M12 6P**	2701498	1	**AXL E PB DIO16 M12 6P**	2701499	1

8 digital inputs and 8 digital outputs

8 digital inputs and 4 digital outputs

8 IO-Link ports, 4 digital inputs

Ex:

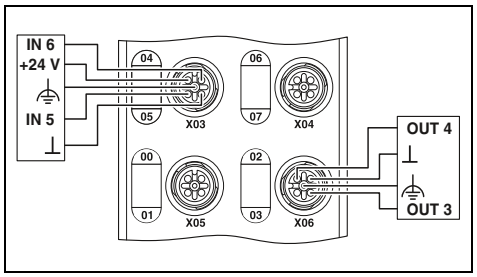

Ex:

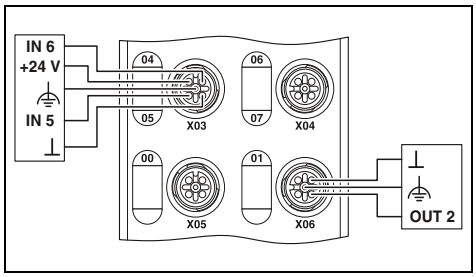

Ex:

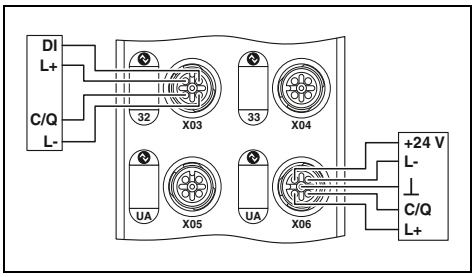

Technical data

AXL E PB DI8 DO8 M12 6M	AXL E PB DI8 DO8 M12 6P	AXL E PB DI8 DO4 2A M12 6M	AXL E PB DI8 DO4 2A M12 6P
PROFIBUS DP M12 fast connection technology 9.6 kbps ... 12 Mbps (automatic baud rate detection)		PROFIBUS DP M12 fast connection technology 9.6 kbps ... 12 Mbps (automatic baud rate detection)	
24 V DC 18 V DC ... 31.2 V DC (including all tolerances, including ripple)		24 V DC 18 V DC ... 31.2 V DC (including all tolerances, including ripple)	
M12 connector (T-coded)		M12 connector (T-coded)	
M12 connector, double occupancy		M12 connector, double occupancy	
4-conductor 8 < 1000 µs Overload protection, short-circuit protection of sensor supply		4-conductor 8 < 1000 µs Overload protection, short-circuit protection of sensor supply	
M12 connector, double occupancy 3-conductor 8 500 mA Overload protection, short-circuit protection of outputs		M12 connector, (A-coded) 3-conductor 4 2 A Overload protection, short-circuit protection of outputs	
- - -		- - -	
- - -		- -	
750 g 60 mm / 185 mm / 38 mm	480 g 60 mm / 185 mm / 30.5 mm	750 g 60 mm / 185 mm / 38 mm	480 g 60 mm / 185 mm / 30.5 mm
IP65/IP67		IP65/IP67	
Class A product, see page 527		Class A product, see page 527	

Ordering data

Type	Order No.	Pcs./Pkt.
AXL E PB DI8 DO8 M12 6M	2701504	1
AXL E PB DI8 DO8 M12 6P	2701497	1

Technical data

AXL E PB IOL8 DI4 M12 6M	AXL E PB IOL8 DI4 M12 6P		
PROFIBUS DP M12 fast connection technology 9.6 kbps ... 12 Mbps (automatic baud rate detection)			
24 V DC 19.5 V DC ... 31.2 V DC (including all tolerances, including ripple)			
M12 connector (T-coded)			
M12 connector, X01 ... X04 have double occupancy			
3-conductor 4 < 1000 µs Overload protection, short-circuit protection of sensor supply			
- - - - -			
M12 fast connection technology 3-conductor 4 (Class A) / 4 (Class B)			
24 V DC max. 150 mA (at C/Q (pin 4), maximum of 1.6 A over all 8 IO-Link C/Q and L+ cables) max. 200 mA (at L+/L- (pin 1 and pin 3), during startup, up to 1.6 A for short periods) max. 2 A (at U_A (IO-Link B ports, pin 2 and pin 5)) Overload protection yes			
750 g 60 mm / 185 mm / 38 mm	480 g 60 mm / 185 mm / 30.5 mm		
IP65/IP67			
Class A product, see page 527			

Ordering data

Type	Order No.	Pcs./Pkt.
AXL E PB IOL8 DI4 M12 6M	2701508	1
AXL E PB IOL8 DI4 M12 6P	2701503	1

Digital IO-Link I/O boxes

new

The digital IO-Link I/O boxes are used to acquire and output digital signals. The devices are connected to an IO-Link master via their IO-Link port.

Features:
- Connection to an IO-Link master with M12 connectors (A-coded, 5-pos.)
- IO-Link B port with additional power supply
- IO-Link specification V1.1.2

IO-Link

1 IO-Link A port
8/16 digital inputs

IO-Link

1 IO-Link B port
8 digital outputs

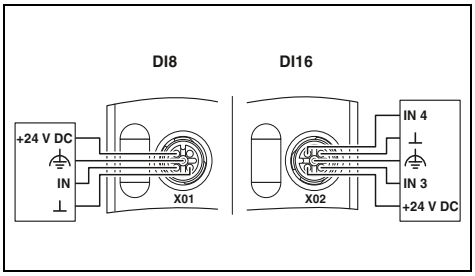

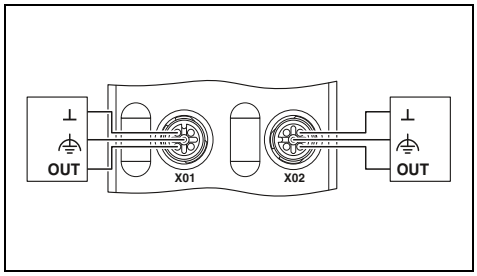

		Technical data		Technical data
		AXL E IOL DI8 M12 6P	AXL E IOL DI16 M12 6P	
IO-Link ports				
Connection method		M12 connector, A-coded		M12 connector, A-coded
Connection technology		3-conductor		5-conductor
Number of ports		1 (Class A)		1 (Class B)
IO-Link port supply L+				
Nominal voltage for I/O supply		24 V DC (is provided via the IO-Link interface of the IO-Link master.)		24 V DC (is provided via the IO-Link interface of the IO-Link master.)
Nominal current per device		approx. 40 mA (15 mA no load + current consumption sensors)	approx. 56 mA (16 mA no load + current consumption sensors)	approx. 15 mA
Protective circuit		Reverse polarity protection yes		Reverse polarity protection yes
Digital inputs				
Connection technology		4-conductor		-
Number of inputs		8	16	-
Description of the inputs		EN 61131-2 types 1 and 3		-
Protective circuit		Overload protection, short-circuit protection of sensor supply Polarity reversal protection of the inputs		-
Digital outputs				
Connection technology		-		3-conductor
Number of outputs		-		8
Protective circuit		-		Overload protection, short-circuit protection of outputs Electronic
General data				
Connection method		M12 connector		M12 connector
Weight		270 g		275 g
Dimensions	W / H / D	60 mm / 141 mm / 20 mm		60 mm / 141 mm / 20 mm
Degree of protection		IP65/IP67		IP65/IP67
Ambient temperature (operation)		-25°C ... 60°C		-25°C ... 60°C
EMC note		Class A product, see page 527		Class A product, see page 527

	Ordering data			Ordering data		
Description	Type	Order No.	Pcs./Pkt.	Type	Order No.	Pcs./Pkt.
Digital IO-Link I/O box						
- 8 digital inputs	**AXL E IOL DI8 M12 6P**	2702658	1			
- 16 digital inputs	**AXL E IOL DI16 M12 6P**	2702660	1			
Digital IO-Link I/O box						
- 8 digital outputs				**AXL E IOL DO8 M12 6P**	2702659	1
	Accessories			**Accessories**		
M12 screw plug	**PROT-M12**	1680539	5	**PROT-M12**	1680539	5

IO-Link/analog converter

new

The AXL E IOL TC4/K M12 Axioline E IO-Link/analog converter is an IO-Link device that transfers analog signals from thermocouples (TCs) via the IO-Link protocol. The device supports standard type K thermocouples in accordance with DIN EN 60584-1. The measured values are depicted in standardized representation format.

Features of IO-Link:
- Connection to an IO-Link master using M12 connectors (A-coded, 4-pos.)
- IO-Link A port
- IO-Link specification V1.1.2
- Status indicators

Features of TCs:
- 4 differential signal inputs
- Measuring range: -270°C ... +1372°C
- Selectable resolution: 0.1 / 0.01
- Selectable unit: °C / °F
- Connection of sensors in 2-conductor technology
- Push-in connection technology
- Diagnostic information in the process data word

1 IO-Link A port
4 analog TC inputs, type K

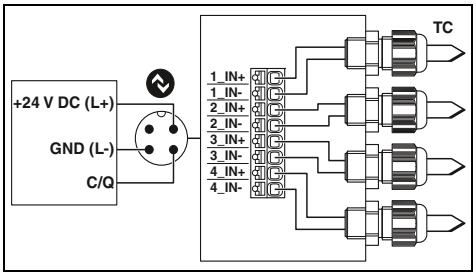

Technical data

IO-Link ports		
Connection method		M12 connector, A-coded
Connection technology		3-conductor
Number of ports		1 (Class A)
IO-Link port supply L+		
Nominal voltage for I/O supply		24 V DC (is provided via the IO-Link interface of the IO-Link master.)
Nominal current per device		typ. 35 mA (±15% (at 24 V DC), max. 70 mA)
Protective circuit		Reverse polarity protection yes Short-circuit protection yes Overload protection yes
Temperature input		
Connection method		Push-in technology
Connection technology		2-conductor
Number of inputs		4 (type K)
Sensor types that can be used (TC)		K
Measured value representation		16 bits
Precision		typ. ± 0.2% (of measuring range end value) max. ± 0.4% (of measuring range end value)
General data		
Connection method		Push-in technology
Connection data rigid / flexible / AWG		0.2 ... 1.5 mm² / 0.2 ... 1.5 mm² / 24 - 16
Weight		320 g
Dimensions	W / H / D	150 mm / 54 mm / 118 mm
Degree of protection		IP65
Ambient temperature (operation)		-25°C ... 60°C
EMC note		Class A product, see page 527

Ordering data

Description	Type	Order No.	Pcs./Pkt.
IO-Link/analog converter			
	AXL E IOL TC4/K M12	2702983	1

IO-Link/analog converter

IO-Link/analog converters are used to convert analog input or output signals to the IO-Link interface. You can connect the converters directly in the field.

Features:
- Large variety of analog functions
- Tailored combination of analog functions
- High transmission reliability
- Reduced cabling

IO-Link

1 analog input (0 ... 10 V)

IO-Link

1 analog input (4 ... 20 mA)

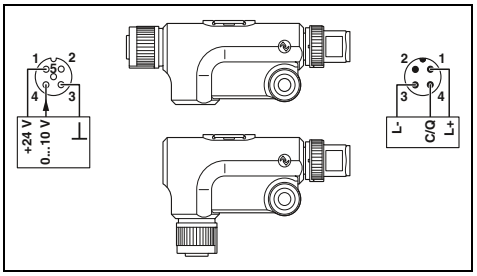

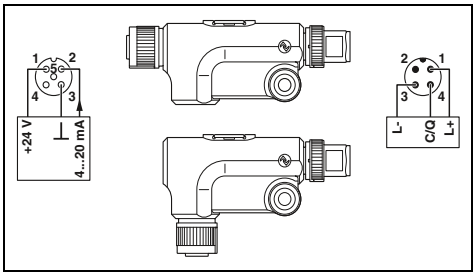

		Technical data		Technical data	
		AXL E IOL AI1 U M12 R	AXL E IOL AI1 U M12 S	AXL E IOL AI1 I M12 R	AXL E IOL AI1 I M12 S
IO-Link ports					
Connection method		M12 connector, A-coded		M12 connector, A-coded	
Connection technology		3-conductor		3-conductor	
Number of ports		1		1	
IO-Link port supply L+					
Nominal voltage for I/O supply		24 V DC (this supply voltage is provided via the IO-Link interface of the IO-Link master.)		24 V DC (this supply voltage is provided via the IO-Link interface of the IO-Link master.)	
Nominal current per IO-Link port		max. 100 mA		max. 100 mA	
Protective circuit		Reverse polarity protection Short-circuit protection Overload protection		Reverse polarity protection Short-circuit protection Overload protection	
Analog inputs					
Connection method		M12 connector, A-coded		M12 connector, A-coded	
Connection technology		3-conductor (optional: 4-conductor)		3-conductor	
Number of inputs		1 (voltage)		1 (current)	
Voltage input signal		0 V ... 10 V		-	
Current input signal		-		4 mA ... 20 mA	
Analog outputs					
Connection method		-		-	
Connection technology		-		-	
Number of outputs		-		-	
Voltage output signal		-		-	
Current output signal		-		-	
Temperature input					
Connection method		-		-	
Connection technology		-		-	
Number of inputs		-		-	
Sensor types that can be used (RTD)		-		-	
Linear resistance measuring range		-		-	
General data					
Weight		34 g		34 g	
Dimensions	W / H / D	16.6 mm / 42 mm / 66.5 mm	16.6 mm / 29 mm / 79.5 mm	16.6 mm / 42 mm / 66.5 mm	16.6 mm / 29 mm / 79.5 mm
Degree of protection		IP65/IP67		IP65/IP67	
Ambient temperature (operation)		-25°C ... 60°C		-25°C ... 60°C	
EMC note		Class A product, see page 527		Class A product, see page 527	

	Ordering data			Ordering data		
Description	Type	Order No.	Pcs./Pkt.	Type	Order No.	Pcs./Pkt.
IO-Link/analog converter						
- Angled version	**AXL E IOL AI1 U M12 R**	2700273	1	**AXL E IOL AI1 I M12 R**	2700275	1
- Straight version	**AXL E IOL AI1 U M12 S**	2700336	1	**AXL E IOL AI1 I M12 S**	2700338	1

IO-Link

1 analog output (0 ... 10 V)

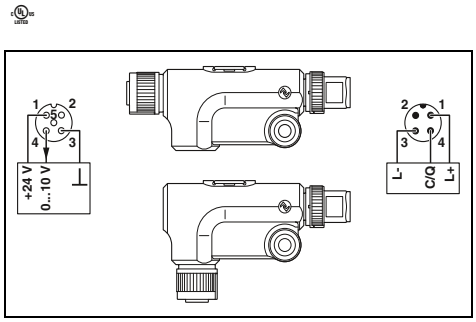

Technical data

AXL E IOL AO1 U M12 R	AXL E IOL AO1 U M12 S
M12 connector, A-coded 3-conductor 1	
24 V DC (this supply voltage is provided via the IO-Link interface of the IO-Link master.) max. 100 mA Reverse polarity protection Short-circuit protection Overload protection	
- - - - -	
M12 connector, A-coded 3-conductor 1 (voltage) 0 V ... 10 V -	
- - - - -	
34 g 16.6 mm / 42 mm / 66.5 mm IP65/IP67 -25°C ... 60°C Class A product, see page 527	16.6 mm / 29 mm / 79.5 mm

Ordering data

Type	Order No.	Pcs./Pkt.
AXL E IOL AO1 U M12 R	2700278	1
AXL E IOL AO1 U M12 S	2700350	1

IO-Link

1 analog output (4 ... 20 mA)

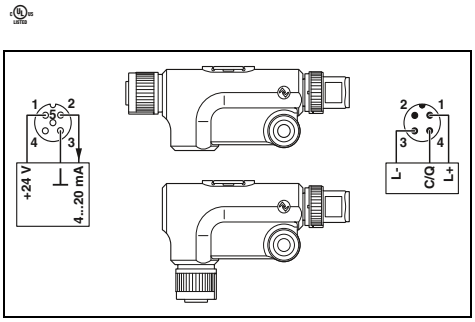

Technical data

AXL E IOL AO1 I M12 R	AXL E IOL AO1 I M12 S
M12 connector, A-coded 3-conductor 1	
24 V DC (this supply voltage is provided via the IO-Link interface of the IO-Link master.) max. 100 mA Reverse polarity protection Short-circuit protection Overload protection	
- - - - -	
M12 connector, A-coded 3-conductor 1 (current) - 4 mA ... 20 mA	
- - - - -	
34 g 16.6 mm / 42 mm / 66.5 mm IP65/IP67 -25°C ... 60°C Class A product, see page 527	16.6 mm / 29 mm / 79.5 mm

Ordering data

Type	Order No.	Pcs./Pkt.
AXL E IOL AO1 I M12 R	2700282	1
AXL E IOL AO1 I M12 S	2700351	1

IO-Link

1 RTD input

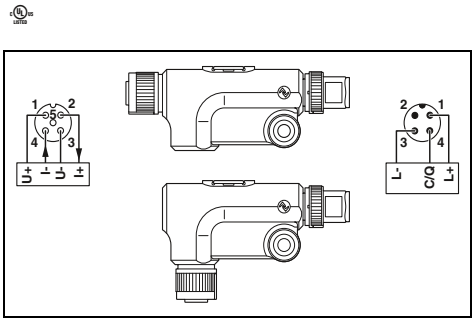

Technical data

AXL E IOL RTD1 M12 R	AXL E IOL RTD1 M12 S
M12 connector, A-coded 3-conductor 1	
24 V DC (this supply voltage is provided via the IO-Link interface of the IO-Link master.) - Reverse polarity protection Short-circuit protection Overload protection	
- - - - -	
- - - - -	
M12 connector, A-coded 3-conductor (optional: 4-conductor) 1 (for resistance temperature detectors) Pt 100, Pt 1000 0 Ω ... 500 Ω (IB IL format) / 0 Ω ... 5 kΩ (IB IL format) / 0 Ω ... 600 Ω (S7-compatible format) / 0 Ω ... 6 kΩ (S7-compatible format)	
34 g 16.6 mm / 42 mm / 66.5 mm IP65/IP67 -25°C ... 60°C Class A product, see page 527	16.6 mm / 29 mm / 79.5 mm

Ordering data

Type	Order No.	Pcs./Pkt.
AXL E IOL RTD1 M12 R	2700305	1
AXL E IOL RTD1 M12 S	2700352	1

M12 POWER connectors, screw connection

Further products related to the innovative M12 POWER cabling can be found on our website under web code:

Your web code: #0024

Metal knurl, 4-pos.

Y distributor, T-coded, 4-pos.

	Technical data	Technical data
General data		
Degree of pollution	3	3
Degree of protection	IP67	-
Connection method	Screw connection	-
Connection cross section [mm²]	0.75 mm² ... 1.5 mm²	-
Electrical data		
Rated voltage	63 V DC	63 V DC
Rated current	12 A (when using 1.5 mm² conductors)	2x 12 A (at 40°C)
Insulation resistance	> 10 GΩ	≥ 100 MΩ
Material data		
Contact / contact surface material	CuZn / Au	CuZn / Ni/Au
Contact carrier material	PA	PA
Flammability rating in accordance with UL 94	V0	HB
Temperature data		
Male / female [°C]	-40 ... 85	-25 ... 80

	Ordering data			Ordering data		
Description	Type	Order No.	Pcs./Pkt.	Type	Order No.	Pcs./Pkt.
Connector, cable diameter: **8 mm ... 10 mm**						
Female, straight	SACC-M12FST-3PECON-PG11-M	1404644	1			
Male, straight	SACC-M12MST-3PECON-PG11-M	1404643	1			
Female, angled	SACC-M12FRT-4CON-PG11-M	1408989	1			
Male, angled	SACC-M12MRT-4CON-PG11-M	1408988	1			
Y distributor, unshielded, M12 male to 2 x M12 female				SAC-4PY-MT/2XFT VP	1410632	5

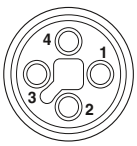

Pin assignment of M12 female, 4-pos., T-coded, view of socket side

Connector pin assignment of M12 male, 4-pos., T-coded, view of pin side

M12 POWER cables, 4-pos., T-coded, cable type: PUR

	Free end		M12 male			
	Ordering data		Ordering data		Ordering data	
Free end		Order No.		Order No.		Order No.
			1 m	1408812	1 m	1408816
			2 m	1408813	2 m	1408819
			5 m	1408814	5 m	1408820
			10 m	1408815	10 m	1408822
M12 female, straight						
	1 m	1408823	1 m	1408808		
	2 m	1408824	2 m	1408809		
	5 m	1408825	5 m	1408810		
	10 m	1408826	10 m	1408811		
M12 female, angled						
	1 m	1408827			1 m	1415196
	2 m	1408828			2 m	1415197
	5 m	1408829			5 m	1415198
	10 m	1408830			10 m	1415199

Cable description	Cable type
PUR, halogen-free – black	**PUR**

Color coding		Pin assignment
BN		1
WH		2
BK		4
BU		3

		Technical data
		M12
Rated voltage	[V]	63
Rated current	[A]	12
Material contact M12		CuSn
Material contact surface M12		Ni/Au
Material handle M12		PA
Material, knurls		Zinc die-cast, nickel-plated
Degree of protection		IP65 / IP67 / IP68
Temperature data		
Male / female	[°C]	-25 ... 85

For field installation (IP65/IP67) – Fieldline Modular

Product overview

Bus couplers – Modular

			EtherNet/IP	Ethernet	
188	188	189	189	189	

M12 I/O devices – Modular

Digital input		Digital input/output		Digital output
8 channels	16 channels	4 / 4 channels	8 / 8 channels	8 channels
190	190	191	191	191

Analog input	Analog output	Analog input
4 channels	4 channels	4 channels (RTD)
192	192	193

M8 I/O devices – Modular

Digital input	Digital input/output	Digital output	
8 channels	8 channels	4 channels	8 channels
194	195	195	195

Accessories

FLM ADAP M12/M8
Fieldline Modular M12 / M8 adapters
196

IB IL 24 FLM ...-PAC
Inline branch terminal
196

SAC-5P-M12MS ... TR
M12 termination resistor, PROFIBUS
197

SAC-3P-M12Y/2XM12FS PE
M12 Y distributor
197

FLM MP...
Mounting plates
196

PROT-M12 / M8 ...
Sealing caps
197

ZBF 12 ... / ZBF 8 ...
Marking material
197

...
Bus and power cables with M12 connector
198

SAC-4P-M ...
Bus and power cables with M8 connector
200

SACC-M12... / SACC-M8...
M12 / M8 connectors for assembly
201

General technical data

Ambient conditions	
Temperature range (operation)	-25°C ... +60°C
Permissible humidity (storage/transport)	95%
Vibration	5g in accordance with EN 60068-2-6
Shock	30g in accordance with EN 60068-2-27
Degree of protection	IP65/IP67 in accordance with IEC 60529

Electromagnetic compatibility	
Noise emission	Class A in accordance with DIN EN 55022

Supply voltage	
Nominal value	24 V DC
Permissible range	18.0 V DC ... 30.0 V DC, including ripple

Housing types and dimensions

Bus couplers	M12 I/O devices	M8 I/O devices

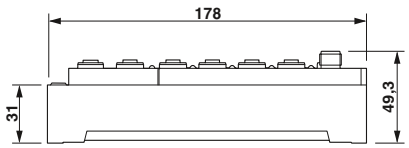

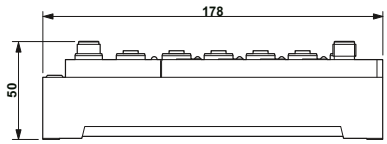

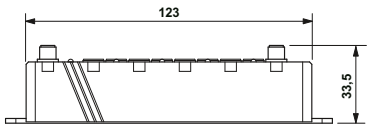

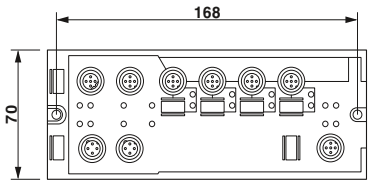

Bus couplers – Modular

The bus couplers open a high-performance local bus with up to 16 devices.

The following protocols are supported:
- INTERBUS
- PROFINET
- PROFIBUS
- EtherNet/IP™
- Modbus/TCP

Notes:

A comprehensive range of installation materials for field installation can be found on page 196

INTERBUS

PROFINET

Ex:

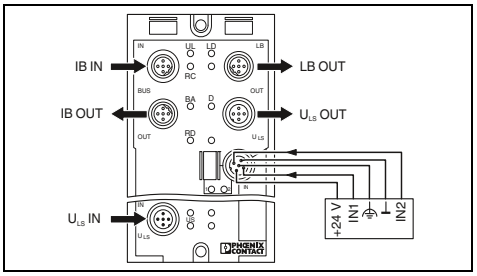

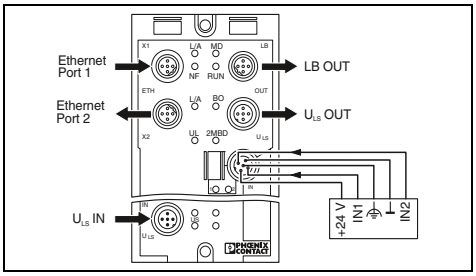

		Technical data	Technical data
Interface			
Fieldbus system		INTERBUS	PROFINET
Connection method		M12 connector, B-coded	M12 connector, D-coded
Number of positions		5	4
Transmission speed		500 kbps / 2 Mbps (can be switched)	100 Mbps (auto negotiation)
Power supply for module electronics			
Supply voltage		24 V DC	24 V DC
Supply voltage range		18 V DC ... 30 V DC (including ripple)	18 V DC ... 30 V DC (including ripple)
Connection method		M12 connector	M12 connector
Local bus gateway			
Transmission speed		500 kbaud/2 Mbaud, can be selected	500 kbaud/2 Mbaud, can be selected
Connection method		M12 connector, B-coded	M12 connector, B-coded
Max. number of local bus devices		16	16
Max. length of local bus		20 m	20 m
Digital inputs			
Connection method		M12 connector	M12 connector
Connection technology		2-, 3-, 4-conductor	2-, 3-, 4-conductor
Number of inputs		8 (double occupancy)	8 (EN 61131-2 type 1)
Description of the inputs		IEC 61131-2 type 1	IEC 61131-2 type 1
Filter time		3 ms	3 ms
Protective circuit		Reverse polarity protection	Reverse polarity protection
General data			
Weight		280 g	280 g
Drill hole spacing		168 mm	168 mm
Dimensions	W / H / D	70 mm / 178 mm / 50 mm	70 mm / 178 mm / 50 mm
Degree of protection		IP65/IP67	IP65/IP67
Ambient temperature (operation)		-25°C ... 60°C	-25°C ... 55°C
EMC note		Class A product, see page 527	Class A product, see page 527

Description	Ordering data: Type	Order No.	Pcs./Pkt.	Ordering data: Type	Order No.	Pcs./Pkt.
Fieldline Modular M12 bus coupler						
	FLM BK IB M12 DI 8 M12	2736301	1	**FLM BK PN M12 DI 8 M12-2TX**	2736741	1

PROFIBUS

EtherNet/IP™

Modbus/TCP

Ex:

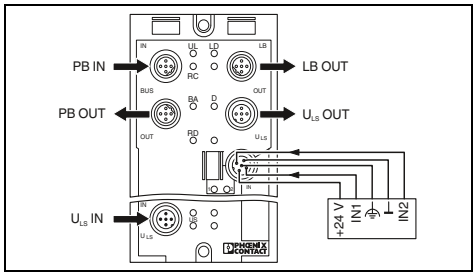

Technical data

PROFIBUS DP
M12 connector, B-coded
5
9.6 kbps ... 12 Mbps

24 V DC
18 V DC ... 30 V DC (including ripple)

M12 connector

500 kbaud/2 Mbaud, can be selected
M12 connector, B-coded
16
20 m

M12 connector
2-, 3-, 4-conductor
8 (double occupancy)
IEC 61131-2 type 1
3 ms
Reverse polarity protection

280 g
168 mm
70 mm / 178 mm / 50 mm
IP65/IP67
-25°C ... 60°C
Class A product, see page 527

Ordering data

Type	Order No.	Pcs./Pkt.
FLM BK PB M12 DI 8 M12-EF	2773377	1

Ex:

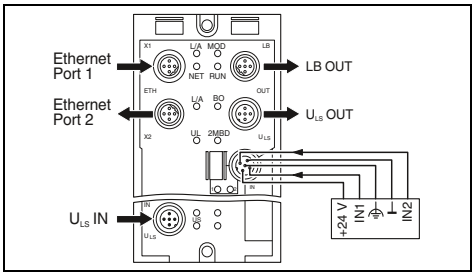

Technical data

EtherNet/IP™
M12 connector, D-coded
4
10/100 Mbps (auto negotiation)

24 V DC
18 V DC ... 30 V DC (including ripple)

M12 connector

500 kbaud/2 Mbaud, can be selected
M12 connector, B-coded
16
20 m

M12 connector
2-, 3-, 4-conductor
8
IEC 61131-2 type 1
3 ms
Reverse polarity protection

280 g
178 mm
70 mm / 178 mm / 50 mm
IP65/IP67
-25°C ... 60°C
Class A product, see page 527

Ordering data

Type	Order No.	Pcs./Pkt.
FLM BK EIP M12 DI 8 M12-2TX	2773322	1

Ex:

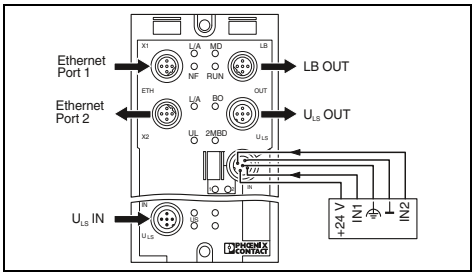

Technical data

Ethernet
M12 connector, D-coded
4
10/100 Mbps (auto negotiation)

24 V DC
18 V DC ... 30 V DC (including ripple)

M12 connector

500 kbaud/2 Mbaud, can be selected
M12 connector, B-coded
16
20 m

M12 connector
2-, 3-, 4-conductor
8 (EN 61131-2 type 1)
IEC 61131-2 type 1
3 ms
Reverse polarity protection

280 g
178 mm
70 mm / 178 mm / 50 mm
IP65/IP67
-25°C ... 60°C
Class A product, see page 527

Ordering data

Type	Order No.	Pcs./Pkt.
FLM BK ETH M12 DI 8 M12-2TX	2736916	1

M12 digital I/O devices – Modular

The local bus devices are used to acquire and output digital signals in a Fieldline Modular station.

Features:
- Seamless connection via M12 connectors
- SPEEDCON fast locking system
- Flexible power supply concept
- Diagnostic and status indicators
- Short-circuit and overload protection

Notes:

A comprehensive range of installation materials for field installation can be found on page 196

8/16 digital inputs

Ex:

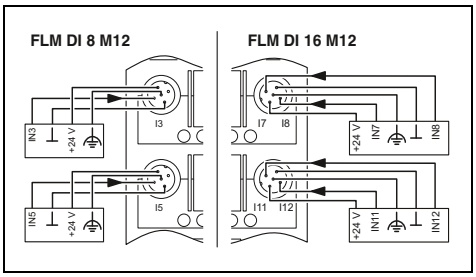

Technical data

		FLM DI 8 M12	FLM DI 16 M12
Interface			
Designation		Fieldline local bus	
Connection method		M12 connector, B-coded	
Transmission speed		500 kbps / 2 Mbps (can be switched)	500 kbps / 2 Mbps
Power supply for module electronics			
Supply voltage		24 V DC	
Supply voltage range		18 V DC ... 30 V DC (including ripple)	
Connection method		M12 connector	
Digital inputs			
Connection method		M12 connector	
Connection technology		2-, 3-, 4-conductor	
Number of inputs		8	16
Description of the inputs		IEC 61131-2 type 1	
Filter time		3 ms	
Protective circuit		Reverse polarity protection	
Digital outputs			
Connection method		-	
Connection technology		-	
Number of outputs		-	
Maximum output current per channel		-	
Protective circuit		-	
General data			
Weight		290 g	310 g
Drill hole spacing		168 mm	
Dimensions	W / H / D	70 mm / 178.5 mm / 50 mm	70 mm / 178 mm / 50 mm
Degree of protection		IP65/IP67	
Ambient temperature (operation)		-25°C ... 60°C	
EMC note		Class A product, see page 527	

Ordering data

Description	Type	Order No.	Pcs./Pkt.
Fieldline Modular M12 digital input device			
- 8 inputs	**FLM DI 8 M12**	**2736288**	1
- 16 inputs	**FLM DI 16 M12**	**2736835**	1
Fieldline Modular M12 digital I/O device			
- 4 inputs, 4 outputs, 2 A			
- 8 inputs, 8 outputs			
Fieldline Modular M12 digital output device			
- 8 outputs			

4/8 digital inputs and 4/8 digital outputs

8 digital outputs

Ex:

Ex:

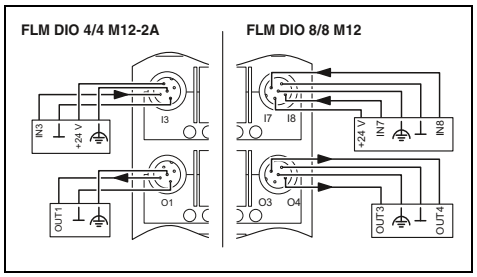

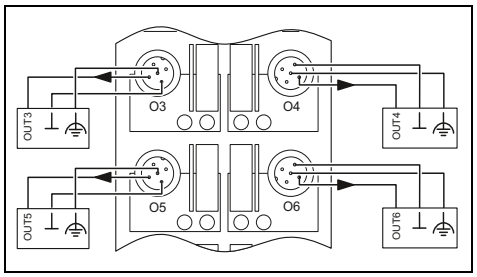

Technical data

FLM DIO 4/4 M12-2A	FLM DIO 8/8 M12	Technical data
Fieldline local bus		Fieldline local bus
M12 connector, B-coded		M12 connector, B-coded
500 kbps / 2 Mbps (can be switched)	500 kbps / 2 Mbps	500 kbps / 2 Mbps (can be switched)
24 V DC		24 V DC
18 V DC ... 30 V DC (including ripple)		18 V DC ... 30 V DC (including ripple)
M12 connector		M12 connector
M12 connector		-
2-, 3-, 4-conductor		-
4	8	-
IEC 61131-2 type 1		-
3 ms		-
Reverse polarity protection		-
M12 connector		M12 connector
2-, 3-conductor		2-, 3-conductor
4	8	8
2 A	500 mA	500 mA
Short-circuit protection		Short-circuit protection
315 g	330 g	310 g
168 mm		168 mm
70 mm / 178 mm / 50 mm		70 mm / 178 mm / 50 mm
IP65/IP67		IP65/IP67
-25°C ... 60°C		-25°C ... 60°C
Class A product, see page 527		Class A product, see page 527

Ordering data

Type	Order No.	Pcs./Pkt.
FLM DIO 4/4 M12-2A	2736369	1
FLM DIO 8/8 M12	2736848	1

Ordering data

Type	Order No.	Pcs./Pkt.
FLM DO 8 M12	2736291	1

M12 analog I/O devices – Modular

The local bus devices are used to acquire and output analog signals in a Fieldline Modular station.

Features:
– Seamless connection via M12 connectors
– SPEEDCON fast locking system
– Flexible power supply concept
– Diagnostic and status indicators
– Short-circuit and overload protection

Notes:
A comprehensive range of installation materials for field installation can be found on page 196

4 analog inputs

Ex:

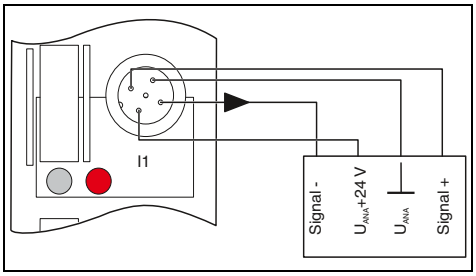

Technical data

Interface		
Designation		Fieldline local bus
Connection method		M12 connector, B-coded
Transmission speed		500 kbps / 2 Mbps
Power supply for module electronics		
Supply voltage		24 V DC
Supply voltage range		18 V DC ... 30 V DC (including ripple)
Analog inputs		
Connection technology		2-, 4-conductor
Number of inputs		max. 4 (differential inputs, voltage or current)
Voltage input signal		0 V ... 5 V / -5 V ... 5 V / 0 V ... 10 V / -10 V ... 10 V
Current input signal		0 mA ... 20 mA / 4 mA ... 20 mA / -20 mA ... 20 mA
Sensor types that can be used (RTD)		-
Protective circuit for voltage input		Reverse polarity protection
Process data update		-
Analog outputs		
Connection technology		-
Number of outputs		-
Voltage output signal		-
Current output signal		-
Protective circuit		-
General data		
Connection method		M12 connector
Weight		280 g
Drill hole spacing		168 mm
Dimensions	W / H / D	70 mm / 178 mm / 50 mm
Degree of protection		IP65/IP67
Ambient temperature (operation)		-25°C ... 60°C
EMC note		Class A product, see page 527

Ordering data

Description	Type	Order No.	Pcs./Pkt.
Fieldline Modular M12 analog input device			
- 4 inputs	**FLM AI 4 SF M12**	**2736453**	1
Fieldline Modular M12 analog output device			
- 4 outputs			

4 analog outputs

4 temperature inputs for resistive sensors

Ex:

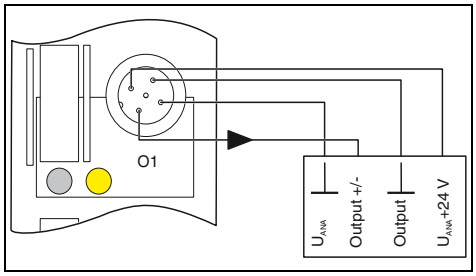

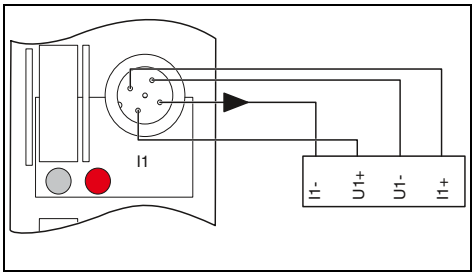

Technical data

Fieldline local bus M12 connector, B-coded 500 kbps / 2 Mbps	Fieldline local bus M12 connector, B-coded 500 kbps / 2 Mbps
24 V DC 18 V DC ... 30 V DC (including ripple)	24 V DC 18 V DC ... 30 V DC (including ripple)
- -	2-, 3-, 4-conductor (shielded) max. 4 (for resistance temperature detectors)
- - - - -	- - Pt, Ni, KTY sensors, linear resistors - Dependent on the connection method
2-, 4-conductor 4 0 V ... 5 V / -5 V ... 5 V / 0 V ... 10 V / -10 V ... 10 V 0 mA ... 20 mA / 4 mA ... 20 mA Short-circuit protection	- - - - -
M12 connector 280 g 168 mm 70 mm / 178 mm / 50 mm IP65/IP67 -25°C ... 60°C Class A product, see page 527	M12 connector 280 g 168 mm 70 mm / 178 mm / 50 mm IP65/IP67 -25°C ... 60°C Class A product, see page 527

Ordering data

Type	Order No.	Pcs./Pkt.
FLM AO 4 SF M12	2736466	1

Ordering data

Type	Order No.	Pcs./Pkt.
FLM TEMP 4 RTD M12	2736819	1

M8 digital I/O devices – Modular

The slim local bus devices are particularly suitable for use on machines close to the process.

Features:
– Seamless connection via M8 connectors
– Optimized for 30 mm mounting profile
– Can also be connected to an Inline station
– Diagnostic and status indicators
– Short-circuit and overload protection

Notes:
A comprehensive range of installation materials for field installation can be found on page 196

8 digital inputs

Ex:

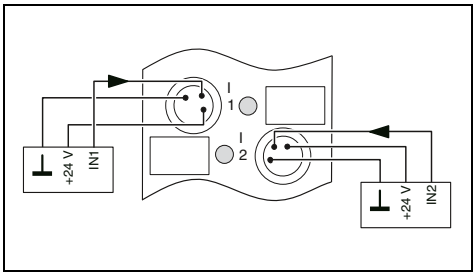

Technical data

Interface		
Designation		Fieldline local bus
Connection method		M8 connector
Power supply for module electronics		
Supply voltage		24 V DC
Supply voltage range		18 V DC ... 30 V DC (including ripple)
Connection method		M8 connector
Digital inputs		
Connection method		M8 connector
Connection technology		2-, 3-conductor
Number of inputs		8
Description of the inputs		IEC 61131-2 type 1
Filter time		3 ms
Protective circuit		Reverse polarity protection
Digital outputs		
Connection method		-
Connection technology		-
Number of outputs		-
Maximum output current per channel		-
Protective circuit		-
General data		
Weight		137 g
Drill hole spacing		133 mm
Dimensions	W / H / D	29.8 mm / 143 mm / 26.5 mm
Degree of protection		IP65/IP67
Ambient temperature (operation)		-25°C ... 60°C
EMC note		Class A product, see page 527

Ordering data

Description	Type	Order No.	Pcs./Pkt.
Fieldline Modular M8 digital input device			
- 8 inputs, 500 kBD	**FLM DI 8 M8**	2773348	1
Fieldline Modular M8 digital I/O device			
- 4 inputs fixed, 4 inputs/outputs freely selectable, 500 kBD			
Fieldline Modular M8 digital output device			
- 4 outputs, 2 A, 500 kBD			
- 8 outputs, 500 kBD			

4 digital inputs and 4 digital inputs or outputs

4 digital outputs

8 digital outputs

Ex:

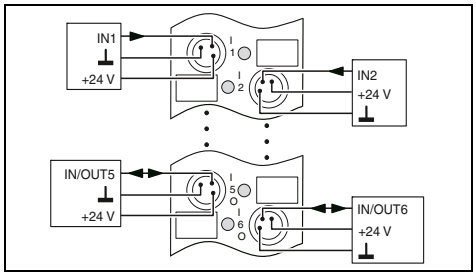

Technical data

Fieldline local bus	
M8 connector	
24 V DC	
18 V DC ... 30 V DC (including ripple)	
M8 connector	
M8 connector	
2-, 3-conductor	
8 (4 fixed, 4 freely selectable)	
IEC 61131-2 type 1	
3 ms	
Reverse polarity protection	
M8 connector	
2-, 3-conductor	
4 (can also be used as an input)	
500 mA	
Short-circuit protection	
144 g	
133 mm	
29.8 mm / 143 mm / 26.5 mm	
IP65/IP67	
-25°C ... 60°C	
Class A product, see page 527	

Ordering data

Type	Order No.	Pcs./Pkt.
FLM DIO 8/4 M8	2773351	1

Ex:

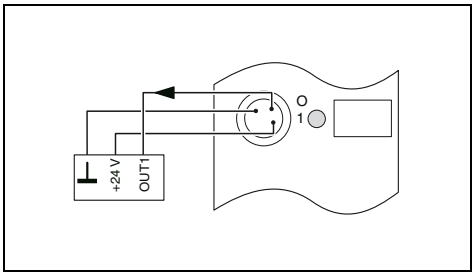

Technical data

Fieldline local bus	
2 M8 connectors	
24 V DC	
18 V DC ... 30 V DC (including ripple)	
M8 connector	
-	
-	
-	
-	
-	
-	
M8 connector	
2-, 3-conductor	
4	
2 A	
Short-circuit protection	
137 g	
133 mm	
29.8 mm / 143 mm / 26.5 mm	
IP65/IP67	
-25°C ... 60°C	
Class A product, see page 527	

Ordering data

Type	Order No.	Pcs./Pkt.
FLM DO 4 M8-2A	2736932	1

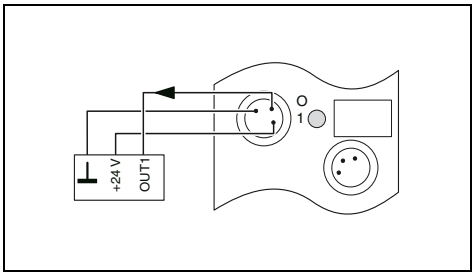

Technical data

Fieldline local bus	
M8 connector	
24 V DC	
18 V DC ... 30 V DC (including ripple)	
M8 connector	
-	
-	
-	
-	
-	
-	
M8 connector	
2-, 3-conductor	
8	
500 mA	
Short-circuit protection	
137 g	
133 mm	
29.8 mm / 143 mm / 26.5 mm	
IP65/IP67	
-25°C ... 60°C	
Class A product, see page 527	

Ordering data

Type	Order No.	Pcs./Pkt.
FLM DO 8 M8	2736893	1

Coupling options

Various adapters are available for connecting two systems.
- Connection of Fieldline Modular M8 to Fieldline Modular M12
- Connection of Fieldline Modular M8 or M12 to the Inline I/O system

Fieldline Modular M12/M8 adapter

Inline branch terminal

	Technical data	Technical data
Local bus interface		
Interface	Fieldline Modular M12 local bus	Inline local bus
Connection method	M12 connector, B-coded	Inline data jumper
Local bus interface		
Interface	Fieldline Modular M8 local bus	Inline local bus
Connection method	2 M8 connectors	Inline shield connector

	Ordering data			Ordering data		
Description	Type	Order No.	Pcs./Pkt.	Type	Order No.	Pcs./Pkt.
Adapter piece for coupling Fieldline Modular M8 local bus devices to a Fieldline Modular M12 local bus	**FLM ADAP M12/M8**	2736961	1			
Inline branch terminal for connecting a Fieldline Modular M8 or M12 local bus at the end of an Inline station				**IB IL 24 FLM-PAC**	2736903	1
Inline branch terminal for connecting a Fieldline Modular M8 local bus at any point in an Inline station				**IB IL 24 FLM MULTI-PAC**	2737009	1

Mounting plates

Up to seven Fieldline Modular M12 devices can be mounted on the mounting plates.

For 5 Fieldline Modular devices

For 7 Fieldline Modular devices

	Technical data	Technical data
General data		
Width	360 mm	502 mm
Depth	11 mm	11 mm
Height	185 mm	185 mm
Hole diameter	8.5 mm	8.5 mm
Note regarding dimensions	For fastening the mounting plate	For fastening the mounting plate
Assembly instructions	For mounting 5 Fieldline Modular devices	For mounting 7 Fieldline Modular devices
Material	Chromated aluminum	Chromated aluminum
Weight	650 g	900 g

	Ordering data			Ordering data		
Description	Type	Order No.	Pcs./Pkt.	Type	Order No.	Pcs./Pkt.
Fieldline Modular mounting plate						
- For five Fieldline Modular M12 devices	**FLM MP 5**	2736660	1			
- For seven Fieldline Modular M12 devices				**FLM MP 7**	2736673	1

System components

Various system components with M12 connectors enable the easy creation of different topologies.
– Termination resistor
– Y distributor for signal connections

Termination resistor

Y distributor

Description	Ordering data			Ordering data		
	Type	Order No.	Pcs./Pkt.	Type	Order No.	Pcs./Pkt.
Termination resistor, M12 plug - PROFIBUS	SAC-5P-M12MS PB TR	1507803	5			
M12 Y distributor M12 plug to 2x M12 sockets				SAC-3P-M12Y/2XM12FS PE	1683455	5

Installation material

– Sealing caps with external or inner thread
– Printed marking labels or marking labels without color print

Sealing caps and marking material

Description	Ordering data		
	Type	Order No.	Pcs./Pkt.
M12 screw plug for unused M12 sockets of sensor/actuator cables, boxes, and device connectors	PROT-M12	1680539	5
As above, with SPEEDCON fast locking system	PROT-MS SCO	1553129	5
for unused M12 connectors of sensor/actuator cables, device connectors, and I/O devices in the field	PROT-M12 FS	1560251	5
M8 screw plug for unused M8 sockets of sensor/actuator cables, boxes, and device connectors	PROT-M8	1682540	5
Zack marker strip, flat, 5-section, without color print 5-section, for 50 terminal blocks	ZBF 12:UNBEDRUCKT	0809735	10
	ZBF 8:UNBEDRUCKT	0808781	10
Zack marker strip, flat, marked according to customer specifications 5-section	ZBF 12 CUS	0825018	1
	ZBF 8 CUS	0825030	1

Bus and power cables with M12 connector

Phoenix Contact offers a complete range of bus and power cables for the Fieldline system.

INTERBUS bus cable

PROFINET bus cable

PROFIBUS bus cable

		Ordering data		Ordering data		Ordering data	
Description	**Length of cable**	**Order No.**	Pcs./Pkt.	**Order No.**	Pcs./Pkt.	**Order No.**	Pcs./Pkt.
Pre-assembled bus cable M12 pin, straight, shielded, free cable end							
	1 m			1407495	1		
	2 m	1517877	1	1407496	1	1518025	1
	5 m	1517880	1	1407497	1	1518038	1
	10 m	1517893	1	1407498	1	1518041	1
	15 m	1517903	1	1524336	1	1518054	1
Pre-assembled bus cable M12 socket, straight, shielded, free cable end							
	1 m			1407528	1		
	2 m	1517916	1	1407529	1	1518067	1
	5 m	1517929	1	1407530	1	1518070	1
	10 m	1517932	1	1407531	1	1518083	1
	15 m	1517945	1			1518096	1
Pre-assembled bus cable M12 pin, straight, shielded, M12 socket, straight, shielded							
	0.3 m	1517958	1			1518106	1
	0.5 m	1517961	1			1518119	1
	1 m	1517974	1	1407553	1	1518122	1
	2 m	1517987	1	1407554	1	1518135	1
	5 m	1517990	1	1407555	1	1518148	1
	10 m	1518009	1	1407556	1	1518151	1
	15 m	1518012	1			1518164	1
Pre-assembled bus cable M12 pin, straight, shielded, M12 pin, straight, shielded							
	0.3 m			1524349	1		
	0.5 m			1524352	1		
	1 m			1407524	1		
	2 m			1407525	1		
	5 m			1407526	1		
	10 m			1407527	1		
	15 m			1524404	1		

Ethernet bus cable

Local bus cable

Fieldline Modular power cable

		Ordering data		Ordering data		Ordering data	
Description	**Length of cable**	**Order No.**	Pcs./Pkt.	**Order No.**	Pcs./Pkt.	**Order No.**	Pcs./Pkt.
Pre-assembled bus cable M12 pin, straight, shielded, free cable end							
	1 m	1407356	1				
	2 m	1407357	1	1517877	1		
	5 m	1407358	1	1517880	1		
	10 m	1407359	1	1517893	1		
	15 m	1569427	1	1517903	1		
Pre-assembled bus cable M12 socket, straight, shielded, free cable end							
	1 m	1407380	1				
	2 m	1407381	1	1517916	1		
	5 m	1407382	1	1517929	1		
	10 m	1407383	1	1517932	1		
	15 m			1517945	1		
Pre-assembled bus cable M12 pin, straight, shielded, M12 socket, straight, shielded							
	0.13 m			1518478	1		
	0.3 m			1517958	1		
	0.5 m			1517961	1		
	1 m	1407400	1	1517974	1		
	2 m	1407401	1	1517987	1		
	5 m	1407402	1	1517990	1		
	10 m	1407403	1	1518009	1		
	15 m			1518012	1		
Pre-assembled bus cable M12 pin, straight, shielded, M12 pin, straight, shielded							
	0.5 m	1569443	1				
	1 m	1407376	1				
	2 m	1407377	1				
	5 m	1407378	1				
	10 m	1407379	1				
Pre-assembled power cable M12 pin, straight, free cable end							
	2 m					1518326	1
	5 m					1518339	1
	10 m					1518342	1
	15 m					1518355	1
Pre-assembled power cable M12 socket, straight, free cable end							
	2 m					1518368	1
	5 m					1518371	1
	10 m					1518384	1
	15 m					1518397	1
Pre-assembled power cable M12 pin, straight, M12 socket, straight							
	0.13 m					1518481	1
	0.3 m					1518407	1
	0.5 m					1518410	1
	1 m					1518423	1
	2 m					1518436	1
	5 m					1518449	1
	10 m					1518452	1
	15 m					1518465	1

Bus and power cables with M8 connector

The following assembled cables are available for connecting Fieldline Modular M8 devices:
– System cables for the supply voltage and bus signal
– Power cables for the actuator voltage

Straight connector

Angled connector

Description	Length of cable	Ordering data: Type	Ordering data: Order No.	Ordering data: Pcs./Pkt.	Ordering data: Type	Ordering data: Order No.	Ordering data: Pcs./Pkt.
Pre-assembled system cable M8 pin, shielded, free cable end							
	2 m	SAC-4P-M 8MS/ 2,0-950	1543249	1	SAC-4P-M 8MR/ 2,0-950	1550850	1
	5 m	SAC-4P-M 8MS/ 5,0-950	1543252	1	SAC-4P-M 8MR/ 5,0-950	1550863	1
	10 m	SAC-4P-M 8MS/10,0-950	1543265	1	SAC-4P-M 8MR/10,0-950	1550876	1
	20 m	SAC-4P-M 8MS/20,0-950	1543281	1	SAC-4P-M 8MR/20,0-950	1550892	1
Pre-assembled system cable M8 socket, shielded, free cable end							
	2 m	SAC-4P- 2,0-950/M 8FS	1543294	1	SAC-4P- 2,0-950/M 8FR	1550902	1
	5 m	SAC-4P- 5,0-950/M 8FS	1543304	1	SAC-4P- 5,0-950/M 8FR	1550915	1
	10 m	SAC-4P-10,0-950/M 8FS	1543317	1	SAC-4P-10,0-950/M 8FR	1550928	1
	20 m	SAC-4P-20,0-950/M 8FS	1543333	1	SAC-4P-20,0-950/M 8FR	1550944	1
Pre-assembled system cable M8 pin, straight, shielded, M8 socket, straight, shielded							
	0.13 m	SAC-4P-M 8MS/ 0,13-950/M 8FS	1543346	1			
	0.3 m	SAC-4P-M 8MS/ 0,3-950/M 8FS	1543511	1			
	1 m	SAC-4P-M 8MS/ 1,0-950/M 8FS	1543537	1			
	2 m	SAC-4P-M 8MS/ 2,0-950/M 8FS	1543359	1			
	5 m	SAC-4P-M 8MS/ 5,0-950/M 8FS	1543362	1			
	10 m	SAC-4P-M 8MS/10,0-950/M 8FS	1543375	1			
	20 m	SAC-4P-M 8MS/20,0-950/M 8FS	1543391	1			
Pre-assembled system cable M8 pin, angled, shielded, M8 socket, angled, shielded							
	0.13 m				SAC-4P-M 8MR/ 0,13-950/M 8FR	1550957	1
	0.3 m				SAC-4P-M 8MR/ 0,3-950/M 8FR	1550960	1
	0.5 m				SAC-4P-M 8MR/ 0,5-950/M 8FR	1550973	1
	1 m				SAC-4P-M 8MR/ 1,0-950/M 8FR	1550986	1
	2 m				SAC-4P-M 8MR/ 2,0-950/M 8FR	1550999	1
	5 m				SAC-4P-M 8MR/ 5,0-950/M 8FR	1551008	1
	10 m				SAC-4P-M 8MR/10,0-950/M 8FR	1551011	1
	20 m				SAC-4P-M 8MR/20,0-950/M 8FR	1551037	1
Pre-assembled power cable M8 socket, free cable end, 4 x 0.34 mm²							
	2 m	SAC-4P- 2,0-PUR/M 8FS 0,34	1543582	1	SAC-4P- 2,0-PUR/M 8FR 0,34	1553077	1
	5 m	SAC-4P- 5,0-PUR/M 8FS 0,34	1534818	1	SAC-4P- 5,0-PUR/M 8FR 0,34	1553080	1
	10 m	SAC-4P-10,0-PUR/M 8FS 0,34	1543595	1	SAC-4P-10,0-PUR/M 8FR 0,34	1553093	1
	20 m	SAC-4P-20,0-PUR/M 8FS 0,34	1543618	1	SAC-4P-20,0-PUR/M 8FR 0,34	1553116	1

Connectors for assembly

Connectors for assembly enable the flexible cabling of Fieldline devices.
– M12 or M8 connection technology
– Shielded or unshielded
– QUICKON, spring-cage or insulation displacement connection

Ethernet

M12 connector

M8 connector

Description	Ordering data			Ordering data		
	Type	Order No.	Pcs./Pkt.	Type	Order No.	Pcs./Pkt.
M12 connector, shielded						
M12 pin, 5-pos., A-coded, QUICKON connection	SACC-MS-5QO-0,75 SH SCO	1413991	1			
M12 socket, 5-pos., A-coded, QUICKON connection	SACC-FS-5QO-0,75 SH SCO	1413992	1			
M12 pin, 5-pos., B-coded, spring-cage connection, INTERBUS	SACC-M12MSB-5PL SH IB	1424674	1			
M12 socket, 5-pos., B-coded, spring-cage connection, INTERBUS	SACC-M12FSB-5PL SH IB	1424676	1			
M12 pin, 2-pos., B-coded, QUICKON connection, PROFIBUS	SACC-MSB-2QO SH PB SCO	1413931	1			
M12 socket, 2-pos., B-coded, QUICKON connection, PROFIBUS	SACC-FSB-2QO SH PB SCO	1413932	1			
M12 pin, 4-pos., D-coded, QUICKON connection, Ethernet	SACC-MSD-4QO SH ETH SCO	1411066	1			
M12 socket, 4-pos., D-coded, QUICKON connection, Ethernet	SACC-FSD-4QO SH ETH SCO	1411069	1			
M12 pin, 4-pos., D-coded, QUICKON connection, PROFINET	SACC-MSD-4QO SH PN SCO	1411068	1			
M12 socket, 4-pos., D-coded, QUICKON connection, PROFINET	SACC-FSD-4QO SH PN SCO	1411071	1			
M8 connector, shielded						
M8 pin, 4-pos., screw connection				SACC-M 8MS-4CON-M-0,34-SH	1542897	1
M8 socket, 4-pos., screw connection				SACC-M 8FS-4CON-M-0,34-SH	1542910	1
M12 connector, unshielded						
M12 pin, 4-pos., A-coded, QUICKON connection technology, cross section range: 0.14 - 0.34 mm², SPEEDCON fast locking system	SACC-MS-4QO-0,34-M SCO	1521575	1			
M12 socket, 4-pos., A-coded, QUICKON connection technology, cross section range: 0.14 - 0.34 mm², SPEEDCON fast locking system	SACC-FS-4QO-0,34-M SCO	1521588	1			
M12 pin, 4-pos., A-coded, QUICKON connection technology, cross section range: 0.34 - 0.75 mm², SPEEDCON fast locking system	SACC-MS-4QO-0,75-M SCO	1521591	1			
M12 socket, 4-pos., A-coded, QUICKON connection technology, cross section range: 0.34 - 0.75 mm², SPEEDCON fast locking system	SACC-FS-4QO-0,75-M SCO	1521601	1			
M12 socket, 5-pos., A-coded, Push-in connection, cross section range: 0.14 - 0.75 mm²	SACC-M12FS-5PL M	1424652	1			
M8 connector, unshielded						
M8 pin, 3-pos., insulation displacement connection				SACC-M 8MS-3QO-0,5-M	1441024	1
M8 socket, 4-pos., insulation displacement connection				SACC-M 8FS-4QO-0,5-M	1441079	1

AS-Interface

I/Os and components
for AS-Interface

AS-Interface devices make contact with the AS-Interface flat cable without using tools. This minimizes the installation time and reduces costs. Various designs are available – devices with M12 or M8 connections. The latter are extremely compact and ideal for handling machines or robot applications. Furthermore, corresponding accessories are available from Phoenix Contact, including gateways, power supplies, and cabling.

Your advantages:

- Save installation time, thanks to innovative connection technology
- Everything from a single source, thanks to the comprehensive product range
- Tool-free connection using the penetration technique

Find out more with the web code

Detailed information on these products can be found on our website. Simply enter # and numbers in the search field.

Your web code: #0288

	Ordering data		
Description	Type	Order No.	Pcs./Pkt.
Digital I/O devices with M12 connection technology			
- 4 inputs	**FLX ASI DI 4 M12**	2773429	1
- 4 outputs, 2 A	**FLX ASI DO 4 M12-2A**	2773458	1
- 2 inputs, 2 outputs, 2 A	**FLX ASI DIO 2/2 M12-2A**	2773432	1
- 4 inputs, 3 outputs, 2 A	**FLX ASI DIO 4/3 M12-2A**	2773445	1
- 4 inputs, 4 outputs, 2 A	**FLX ASI 3.0 DIO 4/4 M12-2A**	2773474	1
Digital I/O devices with M8 connection technology			
- 4 inputs	**FLX ASI DI 4 M8**	2773403	1
- 4 inputs, 4 outputs, 1 A	**FLX ASI DIO 4/4 M8-1A**	2773416	1
Digital I/O devices with COMBICON connection technology			
- 4 inputs	**ASI IO ME DI 4 AB**	2741671	1
- 4 inputs, 3 outputs	**ASI IO ME DIO 4/3 AB**	2741668	1
AS Interface (AS-i) Gateway for PROFIBUS DP with standard function, IP20 protection, in acc. with AS-i specification 3.0	**FLX ASI MA PB SF**	2773597	1
AS-i Gateway for Inline, IP20 protection, color: green	**ASI MA IL UNI**	2736628	1
Power supply, primary-switched	**ASI QUINT 100-240/2.4 EFD**	2736686	1
	ASI QUINT 100-240/4.8 EFD	2736699	1
Manual addressing device, for AS-Interface devices	**ASI CC ADR**	2741338	1
- Cinch programming cable for manual addressing device	**ASI CC ADR CAB CINCH**	2741341	1

Ruggedline

Distributed I/O system for the automotive body shop

The robust I/O devices with a block design are ideal for use in harsh industrial environments. They are available for INTERBUS and PROFINET systems. The I/O system was specially developed for body shop requirements in the automotive industry.

Your advantages:

- Safe communication even in environments subject to high levels of electromagnetic interference, thanks to data transmission via fiber optics
- Snap-in mounting plate assembly without the use of tools makes installation easier
- Particularly resistant to welding splash and mechanical damage
- Developed specifically for body shop requirements in the automotive industry

	Ordering data		
Description	Type	Order No.	Pcs./Pkt.
Ruggedline devices for PROFINET			
- 16 inputs, twisted pair connection	**RL PN 24-2 DI 16 2TX**	2773665	1
- 8 inputs, 8 I/Os, twisted pair connection	**RL PN 24-2 DIO 16/8 2TX**	2773652	1
- 8 inputs, 8 outputs, FO connection	**RL PN 24-2 DIO 8/8 2SCRJ**	2773513	1
Ruggedline devices for INTERBUS			
- BK module, FO connection	**IBS RL 24 BK RB-LK-LK**	2725024	1
- BK module, twisted pair connection	**IBS RL 24 BK RB-T-T**	2731063	1
- Monitoring device, FO connection	**IBS RL 24 OC-LK**	2819972	1
- 16 inputs, FO connection	**IBS RL 24 DI 16/8-LK**	2724850	1
- 16 inputs, twisted pair connection	**IBS RL 24 DI 16/8-T**	2836463	1
- 8 inputs, 8 outputs, FO connection	**IBS RL 24 DIO 8/8/8-LK**	2724847	1
- 8 inputs, 8 outputs, twisted pair connection	**IBS RL 24 DIO 8/8/8-T**	2836476	1

F-Address
a 0 1 2 3 4 5 6 7
PHOENIX CONTACT
PSDO8/3
2701560
PWR
IN
K1
K2
MS20
S35
PSR-MC20
PSR-MXF4
PWR
ERR
CONF STICK
CONFIRM
PHOENIX CONTACT
PSR-TRISAFE-S
PWR
DATA
ERR
CONF

Functional safety

Smart solutions for functional safety
We make functional safety easy. From non-contact safety switches through to complex controllers, all safety products from Phoenix Contact are SIL-certified. You can install and configure the modules easily. Benefit from the comprehensive service offered by our certified safety experts. With our extensive range of services, we can help you meet all requirements regarding the safety of machinery.

Safety switches
Use our non-contact safety switches with RFID technology for intelligent safety door and position monitoring.

Safety devices
If you require just a small number of safety functions, you can choose from a large range of safety relays, coupling relays, and zero-speed and over-speed safety relays.

Configurable safety modules
The configurable and extendable PSRtrisafe modules can be adapted to your safety requirements.

Safe I/Os
With SafetyBridge Technology, the safety function is processed directly in the I/O modules.

Safe controllers
With the safety controllers, you can reliably integrate functional safety into PROFIsafe networks and operate these together with a standard controller in the same device.

Software
The safety software provides the highest level of convenience in starting up your safety products.

Product overview 206

Selection guide for safety relay modules and safety modules 208

Non-contact safety switches 212

Safety relay modules for machine building
Safety relays – PSRmini 215
Safety relays – PSRclassic 229
Modular safety relay system – PSRmodular 233
Multifunctional safety relays – PSRmultifunction 234
Applications 236

Safety relay modules for zero-speed and over-speed monitoring
Zero-speed and over-speed safety relays – PSRmotion 242

Safety relay modules – Safe coupling relays
Coupling relays – PSRclassic 245

Safety relay modules for the process industry
Safe coupling relays – PSRmini 248
Safe coupling relays – PSRclassic 254
Termination Carriers for PSRmini and PSRclassic 257
Applications 258

Configurable safety modules – PSRtrisafe
Master modules 261
Extension modules 262

Safe I/Os
Logic modules 265
Safe I/O modules 266

Safe control technology
Safe PROFINET gateway 273
Safe PROFIsafe controller 274
Control solution for functional safety 276

Software
Configuration software 278
SafetyProg programming software 280
Safe analog value processing 281

Services for functional safety 282

Safety switches

PSRswitch – Non-contact safety switches with RFID transponder technology
Page 212

Safety relay modules for machine building – Safety relays

PSRmini – Highly compact safety relays for all common applications
Page 215

PSRclassic – Safety relays for all common applications, with time function, extension modules
Page 229

PSRmodular – Modular safety relay system with DIN rail connector
Page 233

PSRmultifunction – Safety relay for three safety functions in a single device
Page 234

Zero-speed and over-speed safety relays

PSRmotion – Sensorless zero-speed monitoring of 1- and 3-phase AC and DC motors
Page 243

PSRmotion – Zero-speed and over-speed safety relays that can be parameterized via software
Page 243

Safe coupling relays

PSRclassic – Safe coupling relays for universal applications
Page 245

Safety relay modules for the process industry – Safe coupling relays

PSRmini – Highly compact, safe coupling relays for failsafe controllers and F&G applications
Page 249

PSRclassic – Safe coupling relays for failsafe controllers
Page 254

Termination Carriers for the alignment and easy mounting of coupling relays
Page 257

Configurable safety modules

PSRtrisafe – Configurable master modules
Page 261

PSRtrisafe – Safe extension modules
Page 262

Safe signal conditioners

• See Catalog 5 –
Interface technology and switching devices

Your web code: #1135

Motor starters

CONTACTRON –
Safe hybrid motor starters
• See Catalog 5 –
Interface technology and switching devices

Power supplies

QUINT POWER –
Safe power supplies
• See Catalog 4 – Surge protection, power supplies, and device circuit breakers

Safe control technology

Safe PROFINET gateway
Page 273

High-performance safety PLCs
Page 274

Control solution for functional safety
Page 276

Safe I/Os

Logic modules for safe signal exchange using a SafetyBridge system
Page 265

Inline – Safe I/O modules for common networks
Page 266

Axioline F – Safe I/O modules for common networks
Page 270

Axioline E – Safe I/O modules with IO-Link interface
Page 272

Software

Configuration and programming software
Page 278

Services for functional safety

Services for the safety of machinery and systems
Individual consultation and on-site process assistance
Page 282

COMPLETE line

The comprehensive solution for your control cabinet:
Easy planning, intuitive installation
Page 522

Safety relay modules for machine building – Safety relays

	Type	Application							Output contacts				Safety approval		Overall width	Page
													PL in acc. with EN ISO 13849-1	SILCL in acc. with EN 62061	in mm	
PSRmini	**PSR-MS20**[1] 24 V DC	X	X	-	X	-	-	A	1	-	-	1	c[4]	1[4]	6.8	215
	PSR-MS21[1] 24 V DC	Coupling module for safe controllers						A	1	-	-	1	e	3	6.8	219
	PSR-MS25[1] 24 V DC	X	X	-	X	-	-	M	1	-	-	1	c[4]	1[4]	6.8	215
	PSR-MS30 24 V DC	X	X	-	X	-	X	A	1	-	-	-	e	3	6.8	216
	PSR-MS35 24 V DC	X	X	-	X	-	X	M	1	-	-	-	e	3	6.8	216
	PSR-MS40[3] 24 V DC	X	X	-	-	-	X	A	1	-	-	1	e	3	6.8	217
	PSR-MS45[3] 24 V DC	X	X	-	-	-	X	M	1	-	-	1	e	3	6.8	217
	PSR-MS50[2] 24 V DC	-	X	-	X	-	-	A	1	-	-	1	e	3	6.8	218
	PSR-MS55[2] 24 V DC	-	X	-	X	-	-	M	1	-	-	1	e	3	6.8	218
	PSR-MS60[3] 24 V DC	X	X	X	X	-	X	A	2	-	-	-	e	3	6.8	219
	PSR-MC20[1] 24 V DC	X	X	-	X	-	-	A/M	3	-	-	1	c[4]	1[4]	12.5	220
	PSR-MC30 24 V DC	X	X	-	X	-	X	A/M	2	-	-	1	e	3	12.5	221
	PSR-MC32 24...230 V AC/DC	X	X	X	X	-	X	A/M	3	-	1	-	e	3	22.5	221
	PSR-MC34 24 V DC	X	X	-	X	-	X	A/M	3	-	-	1	e	3	12.5	222
	PSR-MC37 24 V DC	X	X	-	X	-	X	A	3	-	1	1	e	3[5]	22.5	222
	PSR-MC38 24 V DC	X	X	X	X	-	X	A/M	2	-	-	1	e	3	22.5	223
	PSR-MC40[3] 24 V DC	X	X	X	X	-	X	A/M	3	-	-	1	e	3	12.5	223
	PSR-MC42 24 V DC	X	X	X	X	-	X	A/M	2	-	-	1	e	3	17.5	224
	PSR-MC50[2] 24 V DC	X	X	-	X	-	-	A/M	3	-	-	1	e	3	12.5	224
	PSR-MC60[8] 24 V DC	-	-	-	-	X	-	A	2	-	-	1	c	1	12.5	225
	PSR-MC62[9] 24 V DC	-	-	-	-	X	-	A	2	-	-	1	e	3	12.5	225
	PSR-MC70 24 V DC	X	X	X	X	-	X	A/M	1	1	-	1	c[4]	1[4]	12.5	226
	PSR-MC72 24 V DC	X	X	X	X	-	X	A/M	1	1	-	1	e	3	12.5	226
	PSR-MC73 24 V DC	X	X	X	X	-	X	A/M	1	1	-	1	e	3	12.5	227
	PSR-MC82 24 V DC	Contact extension						A	5	-	1	1	e[6]	3[6]	17.5	228
PSRclassic	**PSR-ESA2-B** 24 V AC/DC	X	X	-	-	-	-	A	4	-	1	-	c[4]	1[4]	22.5	229
	PSR-ESAM2/3X1-B 230 V AC	X	X	-	-	-	-	A/M	3	-	1	-	c[4]	1[4]	22.5	229
	PSR-ESAM4/2X1 24 V AC/DC	X	X	-	-	-	-	A/M	2	-	1	-	e	3	22.5	229
	PSR-ESAM4/3X1-B Voltage variants	X	X	-	-	-	-	A/M	3	-	1	-	e	3	22.5	229
	PSR-ESAM4/8X1 24 V AC/DC	X	X	-	-	-	-	A/M	8	-	1	-	e	3	45	229
	PSR-ESD-30 24 V DC	X	X	X	X	-	X	A/M	2	2	1	-	e	3	22.5	230
	PSR-ESD-300 24 V DC	X	X	X	-	-	X	A/M	3	2	1	-	e[7]	3[7]	45	230
	PSR-ESD-T 24 V DC	X	X	X	-	-	X	A/M	3	2	1	-	e[7]	3[7]	45	230
	PSR-ESL4[3] 24 V AC/DC	X	X	X	-	-	X	A/M	3	-	1	-	e	3	22.5	231
	PSR-THC4[9] 24 V AC/DC	-	X	-	-	X	-	A	2	-	1	-	e	3	22.5	231
	PSR-URML4 24 V DC	Contact extension for OSSD signals							3	-	1	-	e	3	22.5	232
	PSR-URM4 42...230 V AC/DC	Contact extension							4	-	2	-	e[6]	3[6]	22.5	232
	PSR-URM4 24 V AC/DC	Contact extension							5	-	2	-	e[6]	3[6]	22.5	232
	PSR-URM4-B 24 V AC/DC	Contact extension							5	-	2	-	e[6]	3[6]	22.5	232

[1]) 1-channel sensor circuit
[2]) Non-equivalent sensor circuit
[3]) Without cross-circuit detection
[4]) Depending on the application up to PL e/SILCL 3 possible
[5]) EN 81 approval
[6]) In conjunction with suitable evaluating device
[7]) Undelayed contacts: Cat. 4/PL e, SILCL 3
Contacts with dropout delay: Cat. 3/PL d, SILCL 2
[8]) Type IIIA in acc. with EN 574
[9]) Type IIIC in acc. with EN 574
A = Autostart
M = Manual, monitored start

Safety relay modules for machine building – Safety relays

	Type	Application							Output contacts				Safety approval		Page
													PL in acc. with EN ISO 13849-1	SILCL in acc. with EN 62061	
PSRmodular	**PSR-SDC4** 24 V DC	X	X	X	X	-	X	A/M	2	-		1	e	3	233
	PSR-URM4/B 24 V DC	Contact extension							4	-	2	-	e	3	233
	PSR-URD3/3 24 V DC	Contact extension							-	4	2[1])	-	d	2	233
	PSR-URD3/30 24 V DC	Contact extension							-	4	2[1])	-	d	2	233
	PSR-URD3/T2 24 V DC	Contact extension							-	4	2[1])	-	d	2	233
	PSR-SIM4														233
	PSR-SACB...														233
PSRmultifunction	**PSR-MXF1** 24 V DC	X	X	-	-	-	-	A/M	4	-	2	-	e	3	234
	PSR-MXF2 24 V DC	X	-	-	X	-	-	A/M	4	-	2	-	e	3	234
	PSR-MXF3 24 V DC	X	X	X	-	-	X	A/M	4	-	2	-	e	3	234
	PSR-MXF4 24 V DC	X	-	X	X	-	X	A/M	4	-	2	-	e	3	234

[1]) Delayed
A = Autostart
M = Manual, monitored start

Safety relay modules for zero-speed and over-speed monitoring

	Type	Application					Output contacts		Safety approval		Page
					n=0	$n>n_{max}$			PL in acc. with EN ISO 13849-1	SILCL in acc. with EN 62061	
PSRmotion	**PSR-RSM4** 24 V DC	-	X	X	X	X	4	3	e	3	244
	PSR-MM25 24 V DC	X	-	-	X	-	1	2	e	3	243
	PSR-MM30 24 V DC	-	X	X	X	X	2	2	e	3	243

Safety relay modules – Safe coupling relays for universal applications

	Type	Application	Output contacts			Safety approval		Page
						PL in acc. with EN ISO 13849-1	SILCL in acc. with EN 62061	
PSRclassic	**PSR-URM** 24 V AC/DC 120 V AC/DC	Coupling relays for universal applications	5	2	-	c	1	245
	PSR-URM/5X1 24 V AC/DC		5	1	-	c	1	246
	PSR-URM/3X1 24 V AC/DC		3	3	-	c	1	246
	PSR-URM/4X1 24 V AC/DC		4	2	-	c	1	247
	PSR-URM/2X21 24 V AC/DC 120 V AC/DC		-	-	2	c	1	247

Safety relay modules for the process industry – Safe coupling relays

	Type	Application	Output contacts			Diagnostics				Safety approval					Overall width	Page
		Highly compact, safe coupling relays for failsafe controllers:				Visual via LED	Active error feedback via A1	Measurement on the device	Self-monitoring with integrated interlock	SIL in acc. with IEC 61508 / 61511	SIL in acc. with IEC 50156	ATEX / IECEx / Class I Zone 2	G3 in acc. with ANSI / ISA-S71.04	GL	in mm	
PSRmini	**PSR-PS20** 24 V DC	For safety-related switch-off (ESD)	1	1	1	X	X	X	-	3	3	X	X	X	6.8	249
	PSR-PS21 24 V DC		1	1	1	X	X	X	-	2	2	X	X	X	6.8	249
	PSR-PS22 24 V DC		1	1	-	X	X	X	-	3	3	X	X	-	6.8	250
	PSR-PS23 24 V DC		1	1	-	X	-	X	-	3	3	X	X	-	6.8	250
	PSR-PS40 24 V DC		1	-	1	X	-	-	X	3	3	X	X	X	6.8	251
	PSR-PC20 24 V DC		1	1	1	X	X	X	-	3	3	X	X	X	12.5	252
	PSR-PC32 24 V DC		2	1	-	X	-	X	-	3	3	X	X	-	17.5	252
	PSR-PC40 24 V DC		2	-	1	X	X	-	X	3	3	X	X	X	12.5	251
	PSR-PC50 24 V DC	For safety-related switch-on (F&G)	1	-	1	X	X	X	-	3[1])	-	X	X	X	17.5	253
	PSR-PC51/PC52 24 V DC		1	1	-	X	X	X	-	3[1])	3	-	X	-	17.5	253
PSRclassic	**PSR-FSP** 24 V DC	For safety-related switch-off (ESD)	1	1	-	-	-	X	-	3	3	-	-	X	17.5	254
	PSR-FSP/2X1 24 V DC		2	1	-	-	-	X	-	3	3	-	-	X	17.5	255
	PSR-FSP2/2X1 24 V DC		2	1	-	-	-	X	-	2	2	-	-	X	17.5	255
	PSR-ESP4 24 V DC		2	1	-	-	-	-	X	3	-	-	-	X	22.5	256

[1]) Low demand

Configurable safety modules

	Type	Application	Inputs/outputs					Safety approval				Page
			Inputs	Safe control outputs	Ground switching outputs	Clock outputs	Signal outputs	PL in acc. with EN ISO 13849-1	SILCL in acc. with EN 62061	SIL in acc. with IEC 61508	SIL in acc. with IEC 50156	
PSRtrisafe	**PSR-TRISAFE-S** 24 V DC	Master module (not extendable)	20	4	2	2	4	e	3	3	3	261
PSRtrisafe	**PSR-TRISAFE-M** 24 V DC	Master module (safely extendable)	20	4	2	2	4	e	3	3	3	261
PSRtrisafe	**PSR-TS-SDI8-SDIO4** 24 V DC	Safe digital I/O extension module	8	4[1])	-	2[1])	2[1])	e	3	3	3	262
PSRtrisafe	**PSR-TS-SDOR4** 24 V DC	Safe relay module	-	4[3])	-	-	4	e[2])	3[2])	3[2])	3	262

[1]) Configurable via software: outputs to inputs/signal outputs to clock outputs
[2]) Depending on connection, up to ...
[3]) Configurable via software: 4 x 1-channel or 2 x 2-channel

Safe I/Os

	Type	Application	Inputs/outputs				Protocol		Safety approval				Page
			Safe inputs	Safe outputs	Clock outputs	Relay outputs	SafetyBridge Technology	PROFIsafe	PL in acc. with EN ISO 13849-1	SILCL in acc. with EN 62061	SIL in acc. with IEC 61508	Degree of protection	
Logic modules	**IB IL 24 LPSDO 8 V2-PAC** 24 V DC	Logic module with SafetyBridge Technology	-	8	-	-	X	-	e	3	3	IP20	265
Logic modules	**IB IL 24 LPSDO 8 V3-PAC** 24 V DC	Logic module with SafetyBridge Technology	-	8	-	-	X	-	e	3	3	IP20	265
Logic modules	**AXL F LPSDO8/3 IF** 24 V DC	Logic module with SafetyBridge Technology	-	8	-	-	X	-	e	3	3	IP20	269
Safe I/Os Inline	**IB IL 24 PSDI 16-PAC** 24 V DC	Input module [1])	16	-	16	-	X	X	e	3	3	IP20	266
Safe I/Os Inline	**IB IL 24 PSDI 8-PAC** 24 V DC	Input module	8	-	8	-	X	X	e	3	3	IP20	267
Safe I/Os Inline	**IB IL 24 PSDO 8-PAC** 24 V DC	Output module	-	8	-	-	X	X	e	3	3	IP20	267
Safe I/Os Inline	**IB IL 24 PSDO 4/4-PAC** 24 V DC	Output module (positive and negative switching)	-	4	-	-	X	X	e	3	3	IP20	267
Safe I/Os Inline	**IB IL 24 PSDOR 4-PAC** 24 V DC / 230 V DC	Relay module	-	-	-	4	X	X	e	3	3	IP20	268
Safe I/Os Inline	**IB IL SAFE 2-ECO** 24 V DC	Input module with two sensor circuits	-	-	-	-	-	-	e	3	3	IP20	268
Safe I/Os Axioline F	**AXL F SSDI8/4 1F** 24 V DC	Input module	8	-	-	-	X	-	e	3	3	IP20	270
Safe I/Os Axioline F	**AXL F SSDO8/3 1F** 24 V DC	Output module	-	8	-	-	X	-	e	3	3	IP20	271
Safe I/Os Axioline F	**AXL F PSDI8/4 1F** 24 V DC	Input module	8	-	-	-	-	X	e	3	3	IP20	270
Safe I/Os Axioline F	**AXL F PSDO8/3 1F** 24 V DC	Output module	-	8	-	-	-	X	e	3	3	IP20	271
Safe I/Os Axioline E	**AXL E IOL SDI8 SDO4 2A M12 6P** 24 V DC	Input and output module	8	4	8	-	X	X	e	3	3	IP67	272

[1]) Only compatible with IB IL 24 LPSDO V3-PAC

Non-contact safety switches

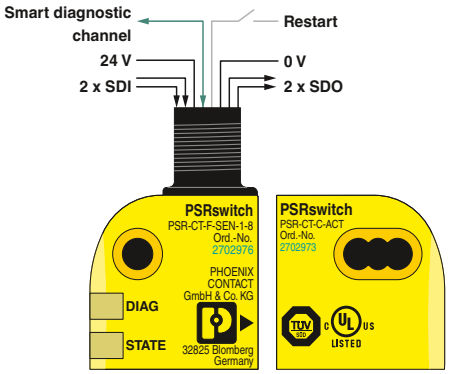

Smart sensor

The compact PSRswitch is an electronic, coded safety switch for flexible safety door and position monitoring. Thanks to the integrated RFID technology and intelligence, it provides maximum tamper protection and the highest level of safety in accordance with EN ISO 13849 and EN ISO 14119.

You receive a cost-effective comprehensive solution with compatible evaluation units and sensor/actuator cabling.

Your web code: #1940

Non-contact and smart

The PSRswitch has the properties of a safety relay with two safe inputs, two safe outputs, and an integrated start circuit. LEDs indicate the current status of the sensor at all times.

Integrated diagnostic channel

Our safety switch system consists of the PSRmini evaluation unit and PSRswitch safety switches. Safe series connection has a two-channel design.

Parallel to this, status information for the individual switches is transmitted to the PSR-MC42 PSRmini safety relay via the integrated diagnostic channel. The safety relay transmits the non-safety-related diagnostic data of the switch to the controller via IO-Link. The data can then be evaluated centrally there.

Series connection up to PL e

Up to 30 safety switches can be safely connected in series with PL e in accordance with EN ISO 13849.

You can wire the safety switches individually. PSRtrisafe and safe I/Os are also suitable evaluation units.

Sensor coding types

The sensors are available in various coding types. When combined with the coded actuator, this results in a corresponding encoding level for the safety switch in accordance with EN ISO 14119.

Fixcode:
- Accepts one actuator
- Single teach-in of one actuator
- High encoding level in accordance with EN ISO 14119

Unicode:
- Accepts one actuator
- Multiple teach-in of actuators
- High encoding level in accordance with EN ISO 14119

Multicode:
- Accepts all actuators
- No teach-in
- Low encoding level in accordance with EN ISO 14119

SAC cabling

PSRswitch safety switches enable convenient installation with M12 male connectors and SAC cables. Various Y distributors support the easy wiring of series connections, manual startup behavior, and integrated diagnostics.

Series connection up to PL e

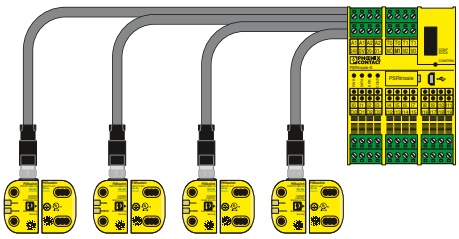

Safe individual wiring

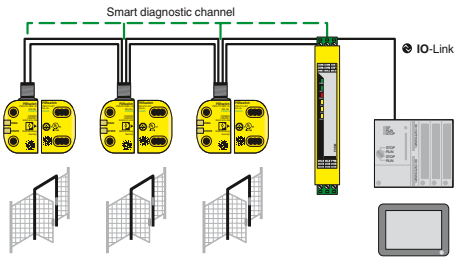

Integrated diagnostic channel

Non-contact safety switches

- Tamper protection via RFID transponder technology
- Safe series connection in accordance with EN ISO 14119
- Coding type depending on the sensor: Fixcode, Unicode or Multicode
- Encoding level in accordance with EN ISO 14119 depending on the sensor
- Design 4 in accordance with EN ISO 14119
- Start/reset input for autostart or manual monitored start
- Up to Cat. 4/PL e in accordance with EN ISO 13849-1, SIL 3 in accordance with IEC 61508

Sensor and actuator

Functional safety

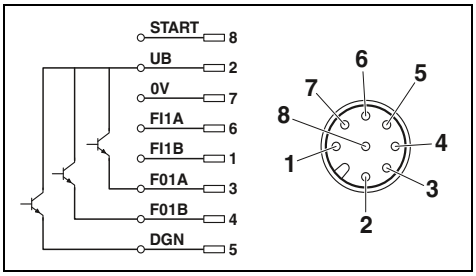

Technical data

Safety inputs / power supply	
Number / description	2 / FI1A, FI1B
Supply voltage	24 V DC ±15% (PELV, controlled, residual ripple < 5%)
Current consumption	max. 40 mA
Protection	min. 0.25 A (to be performed externally) max. 8 A (to be performed externally)
Safety outputs	
Number / description	2 / FO1A, FO1B, Semiconductor outputs, p-wired
Alarm outputs	
Number / description	1 / DGN, p-wired
Current	min. 1 mA max. 50 mA
General data	
Ambient temperature range	-25°C ... 55°C
Connection method	M12 connector
No. of pos.	8
Degree of protection	IP65/IP67/IP69/IP69K IP67 (with SAC cabling)
Status indication	2 LEDs
Dimensions W / H / D	26.5 mm / 40 mm / 18 mm

Ordering data

Description	Type	Order No.	Pcs./Pkt.
Safety sensor			
- Fixcode	**PSR-CT-F-SEN-1-8**	2702976	1
- Unicode	**PSR-CT-C-SEN-1-8**	2702972	1
- Multicode	**PSR-CT-M-SEN-1-8**	2702975	1
Actuator, coded, suitable for all sensor coding types	**PSR-CT-C-ACT**	2702973	1

Accessories

Y distributor			
Type 1, for series connection of PSR-CT safety switches	**SAC-8PY-M/2XF BK 1-PSR**	1054338	1
Type 2, for manual startup behavior of PSR-CT safety switches	**SAC-8PY-M/2XF BK 2-PSR**	1054339	1
Type 3, for integrated diagnostics via signal contact with PSR-CT safety switches	**SAC-8PY-M/2XF BK 3-PSR**	1054341	1
Bridge plug			
- Dummy plug for every sensor circuit	**SAC-5P-M12MS BK BR 1-2-4**	1054366	1

PSRmini safety relays

PSRclassic safety relays

PSRmodular safety relay system

PSRmultifunction multifunctional safety relays

PSRmini safety relays

PSRmini are the narrowest safety relays available on the market. With an overall width of just 6 and 12 mm, we provide you with proven safety, thanks to relay technology developed in-house with force-guided contacts.

Thanks to an innovative DIP switch concept, appropriate settings can be made directly on the module. The needs-based design starting from a single enable path also ensures greater flexibility in your application without limiting performance.

Your web code: #0495

PSRclassic safety relays

The PSRclassic safety relays have a long proven track record. Thanks to the 2-channel wiring and force-guided contacts, they reliably switch functions such as two-hand control devices or light grids.

Screw or spring connection technology ensures the fast wiring of contacts. Status LEDs enable easy diagnostics.

Your web code: #1409

PSRmodular safety relay system

With PSRmodular, you can design your safety system to meet your specific requirements. The modular safety relays are extended easily and flexibly based on the modular principle.

The PSR-TBUS DIN rail connector connects the master safety relay to up to ten extension modules directly on the DIN rail. This eliminates the need for the usual cross-wiring and configuration.

Your web code: #1408

PSRmultifunction multifunctional safety relays

Three safety functions are combined in one narrow housing. This reduces your costs for warehousing and logistics, and saves space in the application. Safety functions already integrated into the device reduce potential wiring errors.

Four device versions with three connection technologies are available for monitoring various types of sensors.

Your web code: #1547

Highly compact safety relays for emergency stop and safety door monitoring

- Single-channel control
- 1 enabling current path, 1 digital signal output
- Basic insulation/reinforced insulation in part
- Activation depending on type: automatic or manual, monitored
- Cat. 1/PL c in accordance with EN ISO 13849-1, SILCL 1 in accordance with IEC 62061
- Depending on the application up to Cat. 4/PL e in accordance with EN ISO 13849-1, SILCL 3 in accordance with IEC 62061

Automatic activation

Manual and monitored activation

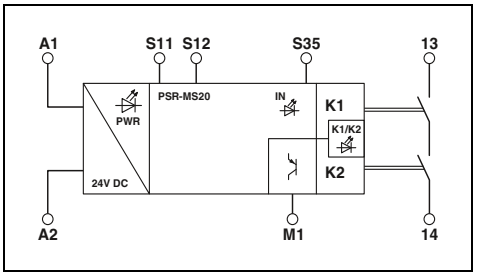

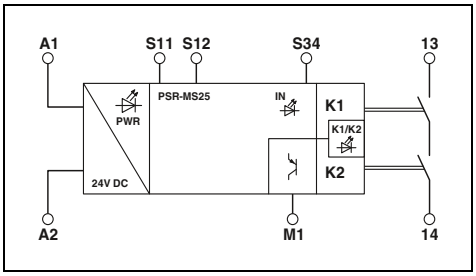

	Technical data	Technical data
Input data		
Rated control supply voltage U_S	24 V DC -15% / +10%	24 V DC -15% / +10%
Rated control supply current I_S	typ. 42 mA	typ. 42 mA
Typical response time	< 175 ms	< 175 ms
Typical release time	< 20 ms (when controlled via A1 or S12)	< 20 ms (when controlled via A1 or S12)
Recovery time	< 500 ms	< 500 ms
Output data		
Contact type	1 enabling current path	1 enabling current path
Contact material	$AgSnO_2$	$AgSnO_2$
Switching voltage	min. 12 V AC/DC / max. 250 V AC/DC (observe the load curve)	min. 12 V AC/DC / max. 250 V AC/DC (observe the load curve)
Limiting continuous current	6 A (observe derating)	6 A (observe derating)
Inrush current	min. 3 mA / max. 6 A	min. 3 mA, max. 6 A
Switching capacity	min. 60 mW	min. 60 mW
Short-circuit protection of the output circuits	6 A gL/gG (N/O contact) 4 A gL/gG (for low-demand applications)	6 A gL/gG (N/O contact) 4 A gL/gG (for low-demand applications)
Alarm outputs		
Number of outputs	1 (digital, PNP)	1 (digital, PNP)
Output current	max. 100 mA	max. 100 mA
Short-circuit protection	no	no
General data		
Ambient temperature range	-40°C ... 60°C (observe derating)	-40°C ... 60°C (observe derating)
Air and creepage distances between the circuits	DIN EN 50178	DIN EN 50178
Rated surge voltage/insulation	Safe isolation, reinforced insulation 6 kV between input circuit and enabling current path Basic insulation 4 kV between all current paths and housing	Safe isolation, reinforced insulation 6 kV between input circuit and enabling current path Basic insulation 4 kV between all current paths and housing
Screw connection rigid / flexible / AWG	0.2 - 2.5 mm^2 / 0.2 - 2.5 mm^2 / 26 - 12	0.2 - 2.5 mm^2 / 0.2 - 2.5 mm^2 / 26 - 12
Dimensions W / H / D	6.8 mm / 93.1 mm / 102.5 mm	6.8 mm / 93.1 mm / 102.5 mm
EMC note	Class A product, see page 527	Class A product, see page 527

Description	Ordering data: Type	Order No.	Pcs./Pkt.	Ordering data: Type	Order No.	Pcs./Pkt.
Emergency stop and safety door monitoring						
	PSR-MS20-1NO-1DO-24DC-SC	2904950	1	**PSR-MS25-1NO-1DO-24DC-SC**	2904951	1

Safety relay modules for machine building – PSRmini

Highly compact safety relays for emergency stop and safety door monitoring

- Two-channel control
- 1 enabling current path
- Basic insulation/reinforced insulation in part
- Cross-circuit detection
- Activation depending on type: automatic or manual, monitored
- Up to Cat. 4/PL e in accordance with EN ISO 13849-1, SILCL 3 in accordance with IEC 62061

Automatic activation

Manual and monitored activation

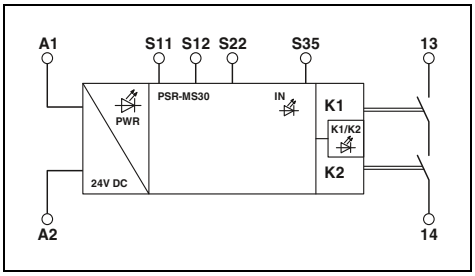

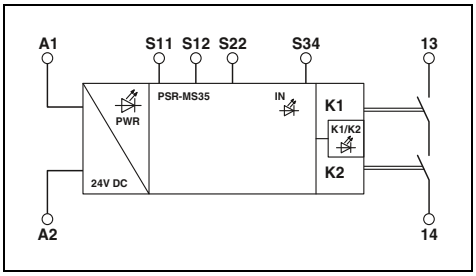

	Technical data	Technical data
Input data		
Rated control supply voltage U_S	24 V DC -15% / +10%	24 V DC -15% / +10%
Rated control supply current I_S	typ. 42 mA	typ. 42 mA
Typical response time	< 175 ms	< 175 ms
Typical release time	< 20 ms (when controlled via A1 or S12 and S22.)	< 20 ms (when controlled via A1 or S12 and S22.)
Recovery time	< 500 ms	< 500 ms
Output data		
Contact type	1 enabling current path	1 enabling current path
Contact material	$AgSnO_2$	$AgSnO_2$
Switching voltage	min. 12 V AC/DC / max. 250 V AC/DC (observe the load curve)	min. 12 V AC/DC / max. 250 V AC/DC (observe the load curve)
Limiting continuous current	6 A (observe derating)	6 A (observe derating)
Inrush current	min. 3 mA / max. 6 A	min. 3 mA, max. 6 A
Switching capacity	min. 60 mW	min. 60 mW
Short-circuit protection of the output circuits	6 A gL/gG (N/O contact) 4 A gL/gG (for low-demand applications)	6 A gL/gG (N/O contact) 4 A gL/gG (for low-demand applications)
General data		
Ambient temperature range	-40°C ... 60°C (observe derating)	-40°C ... 60°C (observe derating)
Air and creepage distances between the circuits	DIN EN 50178	DIN EN 50178
Rated surge voltage/insulation	Safe isolation, reinforced insulation 6 kV between input circuit and enabling current path Basic insulation 4 kV between all current paths and housing	Safe isolation, reinforced insulation 6 kV between input circuit and enabling current path Basic insulation 4 kV between all current paths and housing
Screw connection rigid / flexible / AWG	0.2 - 2.5 mm^2 / 0.2 - 2.5 mm^2 / 26 - 12	0.2 - 2.5 mm^2 / 0.2 - 2.5 mm^2 / 26 - 12
Dimensions W / H / D	6.8 mm / 93.1 mm / 102.5 mm	6.8 mm / 93.1 mm / 102.5 mm
EMC note	Class A product, see page 527	Class A product, see page 527

Description	Ordering data Type	Order No.	Pcs./Pkt.	Ordering data Type	Order No.	Pcs./Pkt.
Emergency stop and safety door monitoring						
	PSR-MS30-1NO-24DC-SC	2904952	1	**PSR-MS35-1NO-24DC-SC**	2904953	1

Highly compact safety relays for emergency stop and safety door monitoring

- Two-channel control
- 1 enabling current path, 1 digital signal output
- Basic insulation/reinforced insulation in part
- Activation depending on type: automatic or manual, monitored
- Up to Cat. 4/PL e in accordance with EN ISO 13849-1, SILCL 3 in accordance with IEC 62061

Automatic activation

Manual and monitored activation

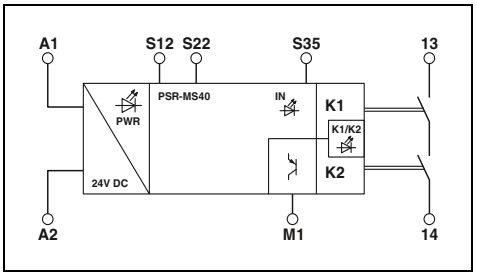

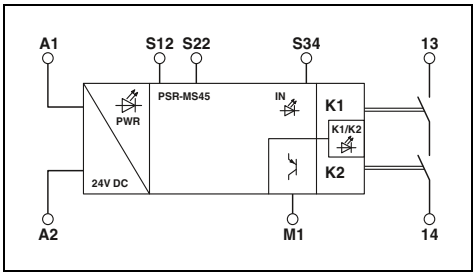

		Technical data	Technical data
Input data			
Rated control supply voltage U_S		24 V DC -15% / +10%	24 V DC -15% / +10%
Rated control supply current I_S		typ. 42 mA	typ. 42 mA
Typical response time		< 175 ms	< 175 ms
Typical release time		< 20 ms (when controlled via A1 or S12 and S22.)	< 20 ms (when controlled via A1 or S12 and S22.)
Recovery time		< 500 ms	< 500 ms
Output data			
Contact type		1 enabling current path	1 enabling current path
Contact material		$AgSnO_2$	$AgSnO_2$
Switching voltage		min. 12 V AC/DC / max. 250 V AC/DC (observe the load curve)	min. 12 V AC/DC / max. 250 V AC/DC (observe the load curve)
Limiting continuous current		6 A (observe derating)	6 A (observe derating)
Inrush current		min. 3 mA / max. 6 A	min. 3 mA, max. 6 A
Switching capacity		min. 60 mW	min. 60 mW
Short-circuit protection of the output circuits		6 A gL/gG (N/O contact) 4 A gL/gG (for low-demand applications)	6 A gL/gG (N/O contact) 4 A gL/gG (for low-demand applications)
Alarm outputs			
Number of outputs		1 (digital, PNP)	1 (digital, PNP)
Output current		max. 100 mA	max. 100 mA
Short-circuit protection		no	no
General data			
Ambient temperature range		-40°C ... 60°C (observe derating)	-40°C ... 60°C (observe derating)
Air and creepage distances between the circuits		DIN EN 50178	DIN EN 50178
Rated surge voltage/insulation		Safe isolation, reinforced insulation 6 kV between input circuit and enabling current path Basic insulation 4 kV between all current paths and housing	Safe isolation, reinforced insulation 6 kV between input circuit and enabling current path Basic insulation 4 kV between all current paths and housing
Screw connection rigid / flexible / AWG		0.2 - 2.5 mm^2 / 0.2 - 2.5 mm^2 / 26 - 12	0.2 - 2.5 mm^2 / 0.2 - 2.5 mm^2 / 26 - 12
Dimensions	W / H / D	6.8 mm / 93.1 mm / 102.5 mm	6.8 mm / 93.1 mm / 102.5 mm
EMC note		Class A product, see page 527	Class A product, see page 527

	Ordering data			Ordering data		
Description	Type	Order No.	Pcs./Pkt.	Type	Order No.	Pcs./Pkt.
Emergency stop and safety door monitoring						
	PSR-MS40-1NO-1DO-24DC-SC	2904954	1	**PSR-MS45-1NO-1DO-24DC-SC**	2904955	1

Safety relay modules for machine building – PSRmini

Highly compact safety relays for monitoring non-equivalent signal generators

- Two-channel non-equivalent control
- 1 enabling current path, 1 digital signal output
- Basic insulation/reinforced insulation in part
- Activation depending on type: automatic or manual, monitored
- Up to Cat. 4/PL e in accordance with EN ISO 13849-1, SILCL 3 in accordance with IEC 62061

Automatic activation

Manual and monitored activation

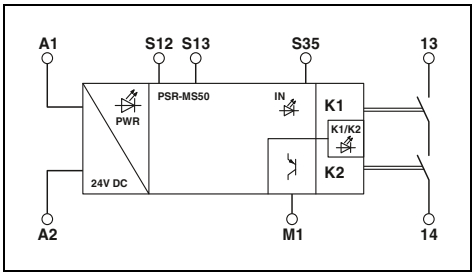

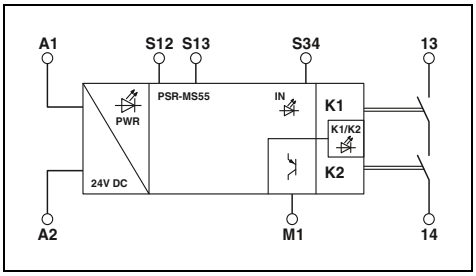

	Technical data	Technical data
Input data		
Rated control supply voltage U_S	24 V DC -15% / +10%	24 V DC -15% / +10%
Rated control supply current I_S	typ. 42 mA	typ. 42 mA
Typical response time	< 175 ms	< 175 ms
Typical release time	< 20 ms (when controlled via A1 or S12 and S13.)	< 20 ms (when controlled via A1 or S12 and S13.)
Recovery time	< 500 ms	< 500 ms
Output data		
Contact type	1 enabling current path	1 enabling current path
Contact material	$AgSnO_2$	$AgSnO_2$
Switching voltage	min. 12 V AC/DC / max. 250 V AC/DC (observe the load curve)	min. 12 V AC/DC / max. 250 V AC/DC (observe the load curve)
Limiting continuous current	6 A (observe derating)	6 A (observe derating)
Inrush current	min. 3 mA / max. 6 A	min. 3 mA, max. 6 A
Switching capacity	min. 60 mW	min. 60 mW
Short-circuit protection of the output circuits	6 A gL/gG (N/O contact) 4 A gL/gG (for low-demand applications)	6 A gL/gG (N/O contact) 4 A gL/gG (for low-demand applications)
Alarm outputs		
Number of outputs	1 (digital, PNP)	1 (digital, PNP)
Output current	max. 100 mA	max. 100 mA
Short-circuit protection	no	no
General data		
Ambient temperature range	-40°C ... 60°C (observe derating)	-40°C ... 60°C (observe derating)
Air and creepage distances between the circuits	DIN EN 50178	DIN EN 50178
Rated surge voltage/insulation	Safe isolation, reinforced insulation 6 kV between input circuit and enabling current path Basic insulation 4 kV between all current paths and housing	Safe isolation, reinforced insulation 6 kV between input circuit and enabling current path Basic insulation 4 kV between all current paths and housing
Screw connection rigid / flexible / AWG	0.2 - 2.5 mm^2 / 0.2 - 2.5 mm^2 / 26 - 12	0.2 - 2.5 mm^2 / 0.2 - 2.5 mm^2 / 26 - 12
Dimensions W / H / D	6.8 mm / 93.1 mm / 102.5 mm	6.8 mm / 93.1 mm / 102.5 mm
EMC note	Class A product, see page 527	Class A product, see page 527

Description	Ordering data: Type	Order No.	Pcs./Pkt.	Ordering data: Type	Order No.	Pcs./Pkt.
Monitoring of non-equivalent signal generators						
	PSR-MS50-1NO-1DO-24DC-SC	2904956	1	**PSR-MS55-1NO-1DO-24DC-SC**	2904957	1

Highly compact safety relays

- Basic insulation/reinforced insulation in part
- Automatic activation
- Up to Cat. 4/PL e in accordance with EN ISO 13849-1, SILCL 3 in accordance with IEC 62061

PSR-MS60: emergency stop, safety door, and light grid monitoring

- Two-channel control
- 2 single-channel enabling current paths

PSR-MS21: monitoring of failsafe controllers

- Single-channel control
- 1 enabling current path, 1 digital signal output

Automatic activation, 2 single-channel enabling current paths

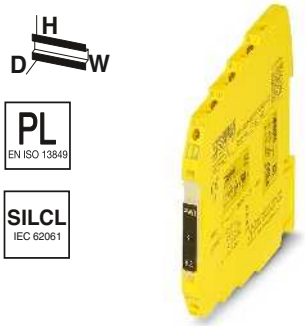

Automatic activation, 1 enabling current path

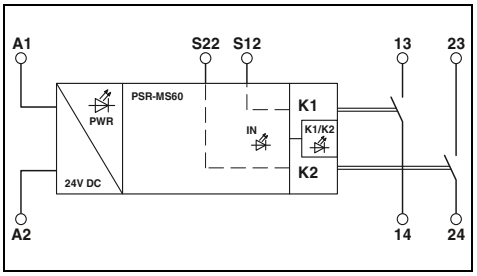

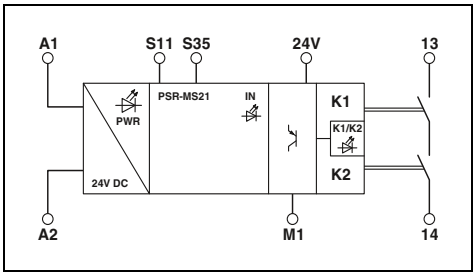

	Technical data	Technical data
Input data		
Rated control supply voltage U_S	24 V DC -15% / +10%	24 V DC -20% / +25% (at A1)
Rated control supply current I_S	typ. 40 mA	typ. 35 mA
Typical response time	< 175 ms	< 150 ms (automatic start)
Typical release time	< 20 ms (when controlled via A1 or S12 and S22.)	< 20 ms (when controlled via A1)
Recovery time	< 500 ms	< 500 ms
Output data		
Contact type	2 enabling current paths	1 enabling current path
Contact material	$AgSnO_2$	$AgSnO_2$
Switching voltage	min. 12 V AC/DC / max. 250 V AC/DC (observe the load curve)	min. 12 V AC/DC / max. 250 V AC/DC (observe the load curve)
Limiting continuous current	6 A (observe derating)	6 A (observe derating)
Inrush current	min. 3 mA / max. 6 A	min. 3 mA, max. 6 A
Switching capacity	min. 60 mW	min. 60 mW
Short-circuit protection of the output circuits	6 A gL/gG (N/O contact) 4 A gL/gG (for low-demand applications)	6 A gL/gG (N/O contact) 4 A gL/gG (for low-demand applications)
Alarm outputs		
Number of outputs	-	1 (digital, PNP)
Output current	-	max. 100 mA
Short-circuit protection	-	Yes
General data		
Ambient temperature range	-40°C ... 55°C (observe derating)	-40°C ... 60°C (observe derating)
Air and creepage distances between the circuits	DIN EN 50178	DIN EN 50178
Rated surge voltage/insulation	Safe isolation, reinforced insulation 6 kV between input circuit and enabling current path (13/14) and enabling current path (23/24) Basic insulation 4 kV between all current paths and housing	Safe isolation, reinforced insulation 6 kV between input circuit and enabling current path (13/14) Basic insulation 4 kV between all current paths and housing
Screw connection rigid / flexible / AWG	0.2 - 2.5 mm² / 0.2 - 2.5 mm² / 26 - 12	0.2 - 2.5 mm² / 0.2 - 2.5 mm² / 26 - 12
Dimensions W / H / D	6.8 mm / 93.1 mm / 102.5 mm	6.8 mm / 93.1 mm / 102.5 mm
EMC note	Class A product, see page 527	Class A product, see page 527

Description	Ordering data: Type	Order No.	Pcs./Pkt.	Ordering data: Type	Order No.	Pcs./Pkt.
Emergency stop, safety door, and light grid monitoring						
	PSR-MS60-2NO-24DC-SC	2904958	1			
Monitoring of failsafe controllers						
				PSR-MS21-1NO-1DO-24DC-SC	2702192	1

Safety relay modules for machine building – PSRmini

Highly compact safety relays for emergency stop and safety door monitoring

- Single-channel control
- 3 enabling current paths, 1 digital signal output
- Basic insulation/reinforced insulation in part
- Manual, monitored, and automatic activation in a single device
- Cat. 1/PL c in accordance with EN ISO 13849-1, SILCL 1 in accordance with IEC 62061
- Depending on the application up to Cat. 4/PL e in accordance with EN ISO 13849-1, SILCL 3 in accordance with IEC 62061

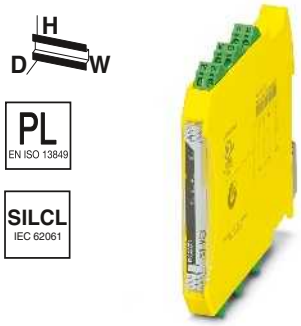

3 enabling current paths

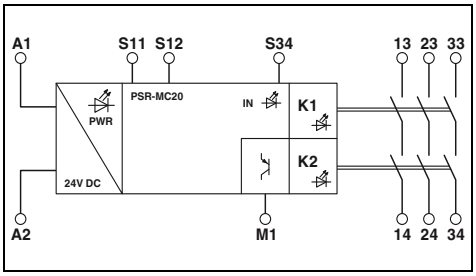

Technical data

Input data	
Rated control supply voltage U_S	24 V DC -15% / +10%
Rated control supply current I_S	typ. 80 mA
Typical response time	< 175 ms (automatic start) < 175 ms (manual, monitored start)
Typical release time	< 20 ms (when controlled via A1 or S12)
Recovery time	< 500 ms
Output data	
Contact type	3 enabling current paths
Contact material	$AgSnO_2$
Switching voltage	min. 12 V AC/DC / max. 250 V AC/DC (observe the load curve)
Limiting continuous current	6 A (observe derating)
Inrush current	min. 3 mA / max. 6 A
Switching capacity	min. 60 mW
Short-circuit protection of the output circuits	6 A gL/gG (N/O contact) 4 A gL/gG (for low-demand applications)
Alarm outputs	
Number of outputs	1 (digital, PNP)
Output current	max. 100 mA
Short-circuit protection	no
General data	
Ambient temperature range	-40°C ... 55°C (observe derating)
Air and creepage distances between the circuits	DIN EN 50178
Rated surge voltage/insulation	Safe isolation, reinforced insulation 6 kV between input circuit and enabling current path (13/14) and enabling current path (23/24) and enabling current path (33/34) Basic insulation 4 kV between all current paths and housing
Screw connection rigid / flexible / AWG	0.2 - 2.5 mm^2 / 0.2 - 2.5 mm^2 / 24 - 12
Spring-cage connection rigid / flexible / AWG	0.2 - 1.5 mm^2 / 0.2 - 1.5 mm^2 / 24 - 16
Dimensions W / H / D — Screw version	12.5 mm / 112.2 mm / 114.5 mm
Dimensions W / H / D — Spring-cage version	12.5 mm / 116.6 mm / 114.5 mm
EMC note	Class A product, see page 527

Ordering data

Description	Type	Order No.	Pcs./Pkt.
Emergency stop and safety door monitoring			
with screw connection	**PSR-MC20-3NO-1DO-24DC-SC**	2700466	1
with spring-cage connection	**PSR-MC20-3NO-1DO-24DC-SP**	2700467	1

Highly compact safety relays

- Two-channel control
- Basic insulation/reinforced insulation in part
- Manual, monitored, and automatic activation in a single device
- Up to Cat. 4/PL e in accordance with EN ISO 13849-1, SILCL 3 in accordance with IEC 62061

PSR-MC30: emergency stop and safety door monitoring

- 2 enabling current paths, 1 digital signal output
- Cross-circuit detection

PSR-MC32: emergency stop, safety door, and light grid monitoring

- 3 enabling current paths, 1 signaling current path
- Wide-range input

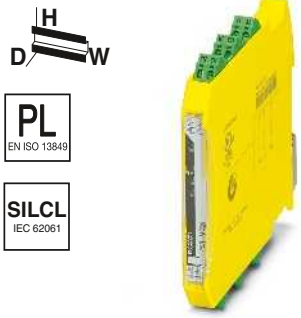

2 enabling current paths

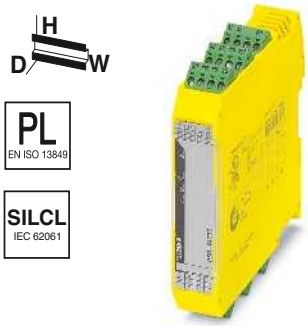

3 enabling current paths, 1 signaling current path

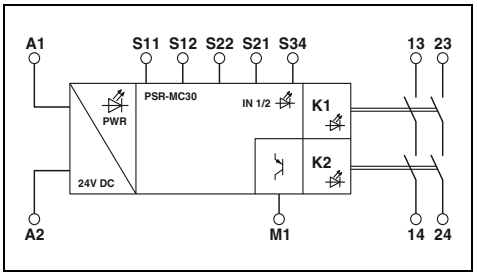

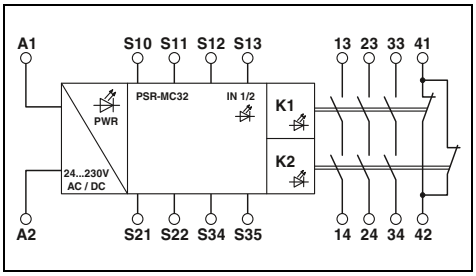

	Technical data	Technical data
Input data		
Rated control supply voltage U_S	24 V DC -15% / +10%	24 V AC/DC ... 230 V AC/DC -15% / +10%
Rated control supply current I_S	typ. 65 mA	typ. 103 mA (24 V DC)
Typical response time	< 175 ms (automatic start) < 175 ms (manual, monitored start)	< 150 ms (automatic start) < 100 ms (manual, monitored start)
Typical release time	< 20 ms (when controlled via A1 or S12 and S22.)	< 20 ms (when actuation is via the sensor circuit)
Recovery time	< 500 ms	< 500 ms
Output data		
Contact type	2 enabling current paths	3 enabling current paths 1 signaling current path
Contact material	$AgSnO_2$	$AgSnO_2$
Switching voltage	min. 12 V AC/DC / max. 250 V AC/DC (observe the load curve)	min. 5 V AC/DC / max. 250 V AC/DC (observe the load curve)
Limiting continuous current	6 A (observe derating)	6 A (observe derating)
Inrush current	min. 3 mA / max. 6 A	min. 10 mA, max. 6 A
Switching capacity	min. 60 mW	min. 50 mW
Short-circuit protection of the output circuits	6 A gL/gG (N/O contact) 4 A gL/gG (for low-demand applications)	6 A gL/gG 4 A gL/gG (for low-demand applications)
Alarm outputs		
Number of outputs	1 (digital, PNP)	-
Output current	max. 100 mA	-
Short-circuit protection	no	-
General data		
Ambient temperature range	-40°C ... 55°C (observe derating)	-40°C ... 55°C (observe derating)
Air and creepage distances between the circuits	DIN EN 50178	DIN EN 50178; EN 60947-5-1
Rated surge voltage/insulation	Safe isolation, reinforced insulation 6 kV between input circuit and enabling current path (13/14) and enabling current path (23/24) Basic insulation 4 kV between all current paths and housing	Basic insulation 4 kV between enabling current path (23/24) and enabling current path (33/34) and signaling current path (41/42) Basic insulation 4 kV between all current paths and housing Safe isolation, reinforced insulation 6 kV between all other circuits
Screw connection rigid / flexible / AWG	0.2 - 2.5 mm^2 / 0.2 - 2.5 mm^2 / 24 - 12	0.2 - 2.5 mm^2 / 0.2 - 2.5 mm^2 / 24 - 12
Spring-cage connection rigid / flexible / AWG	0.2 - 1.5 mm^2 / 0.2 - 1.5 mm^2 / 24 - 16	0.2 - 1.5 mm^2 / 0.2 - 1.5 mm^2 / 24 - 16
Dimensions W / H / D — Screw version	12.5 mm / 112.2 mm / 114.5 mm	22.5 mm / 112.2 mm / 114.5 mm
Dimensions W / H / D — Spring-cage version	12.5 mm / 116.6 mm / 114.5 mm	22.5 mm / 117.4 mm / 114.5 mm
EMC note	Class A product, see page 527	Class A product, see page 527

Description	Ordering data: Type	Order No.	Pcs./Pkt.	Ordering data: Type	Order No.	Pcs./Pkt.
Emergency stop and safety door monitoring						
with screw connection	**PSR-MC30-2NO-1DO-24DC-SC**	2700498	1			
with spring-cage connection	**PSR-MC30-2NO-1DO-24DC-SP**	2700499	1			
Emergency stop, safety door, and light grid monitoring						
with screw connection				**PSR-MC32-3NO-1NC-24-230UC-SC**	2700524	1
with spring-cage connection				**PSR-MC32-3NO-1NC-24-230UC-SP**	2700525	1

Safety relay modules for machine building – PSRmini

Highly compact safety relays

- Two-channel control
- 3 enabling current paths, 1 digital signal output
- Cross-circuit detection
- Up to Cat. 4/PL e in accordance with EN ISO 13849-1, SILCL 3 in accordance with IEC 62061

PSR-MC34: emergency stop and safety door monitoring

- Basic insulation/reinforced insulation in part
- Manual, monitored, and automatic activation in a single device

PSR-MC37: emergency stop, safety door, and elevator monitoring

- Basic insulation
- Manual and automatic activation in a single device
- Approved for elevator applications in accordance with EN 81-20

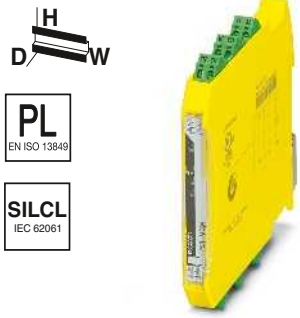

3 enabling current paths

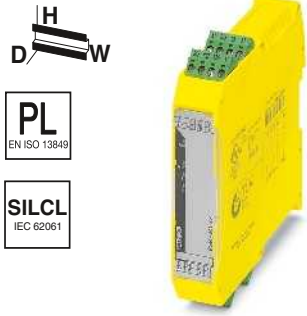

3 enabling current paths, 1 confirmation current path, with elevator approval in acc. with EN 81-20

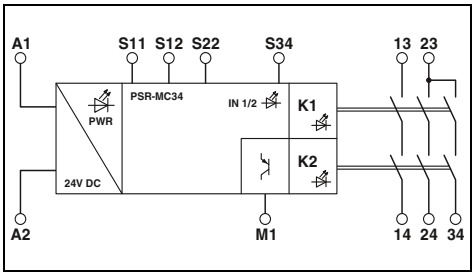

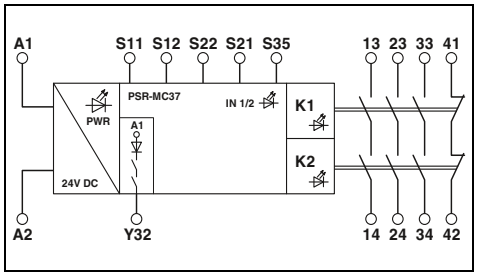

	Technical data	Technical data
Input data		
Rated control supply voltage U_S	24 V DC -15% / +10%	24 V DC -20% / +25%
Rated control supply current I_S	typ. 84 mA	typ. 70 mA
Typical response time	< 175 ms (automatic start) < 175 ms (manual, monitored start)	< 100 ms (automatic start)
Typical release time	< 20 ms (when controlled via A1 or S12 and S22.)	< 20 ms (when controlled via A1 or S12)
Recovery time	< 500 ms	< 500 ms
Output data		
Contact type	3 enabling current paths	3 enabling current paths 1 signaling current path
Contact material	$AgSnO_2$	$AgSnO_2$
Switching voltage	min. 12 V AC/DC / max. 250 V AC/DC (observe the load curve)	min. 5 V AC/DC / max. 250 V AC/DC (observe the load curve)
Limiting continuous current	6 A (observe derating)	6 A (observe derating)
Inrush current	min. 3 mA / max. 6 A	min. 10 mA, max. 6 A
Switching capacity	min. 60 mW	min. 50 mW
Short-circuit protection of the output circuits	6 A gL/gG (N/O contact) 4 A gL/gG (for low-demand applications)	6 A gL/gG (N/O contact)
Alarm outputs		
Number of outputs	1 (digital, PNP)	1 (digital)
Output current	max. 100 mA	max. 100 mA
Short-circuit protection	no	Yes
General data		
Ambient temperature range	-40°C ... 55°C (observe derating)	-40°C ... 60°C (observe derating)
Air and creepage distances between the circuits	DIN EN 50178	DIN EN 60664-1:2008
Rated surge voltage/insulation	Basic insulation 4 kV: Between input circuit and enabling current path (23/24/34) Between all current paths and housing Safe isolation, reinforced insulation 6 kV: Between input circuit and enabling current path (13/14) Between enabling current path (13/14) and enabling current path (23/24/34)	Basic insulation 4 kV between all current paths Basic insulation 4 kV between all current paths and housing
Screw connection rigid / flexible / AWG	0.2 - 2.5 mm^2 / 0.2 - 2.5 mm^2 / 24 - 12	0.2 - 2.5 mm^2 / 0.2 - 2.5 mm^2 / 24 - 12
Spring-cage connection rigid / flexible / AWG	0.2 - 1.5 mm^2 / 0.2 - 1.5 mm^2 / 24 - 16	0.2 - 1.5 mm^2 / 0.2 - 1.5 mm^2 / 24 - 16
Dimensions W / H / D — Screw version	12.5 mm / 112.2 mm / 114.5 mm	22.5 mm / 112.2 mm / 114.5 mm
Dimensions W / H / D — Spring-cage version	12.5 mm / 116.6 mm / 114.5 mm	22.5 mm / 117.4 mm / 114.5 mm
EMC note	Class A product, see page 527	Class A product, see page 527

Description	Ordering data: Type	Order No.	Pcs./Pkt.	Ordering data: Type	Order No.	Pcs./Pkt.
Emergency stop and safety door monitoring						
with screw connection	**PSR-MC34-3NO-1DO-24DC-SC**	2700540	1			
with spring-cage connection	**PSR-MC34-3NO-1DO-24DC-SP**	2700548	1			
Emergency stop, safety door, and elevator monitoring						
with screw connection				**PSR-MC37-3NO-1NC-24DC-SC**	2702411	1
with spring-cage connection				**PSR-MC37-3NO-1NC-24DC-SP**	2702412	1

Highly compact safety relays for emergency stop, safety door, and light grid monitoring

- Two-channel control
- Up to Cat. 4/PL e in accordance with EN ISO 13849-1, SILCL 3 in accordance with IEC 62061

PSR-MC38:

- 2 enabling current paths, 1 digital signal output
- Connection of CONTACTRON hybrid motor starters and MINI POWER power supplies via DIN rail connector
- Cross-circuit detection

PSR-MC40:

- 3 enabling current paths, 1 digital signal output

new

2 enabling current paths

3 enabling current paths

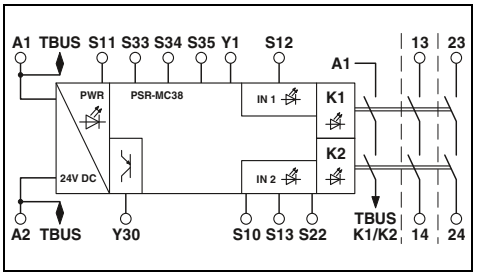

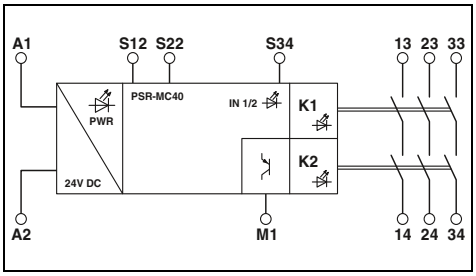

	Technical data	Technical data
Input data		
Rated control supply voltage U_S	24 V DC -15% / +10% (provide external protection)	24 V DC -15% / +10%
Rated control supply current I_S	typ. 75 mA	typ. 80 mA
Typical response time	200 ms (automatic start) 30 ms (manual, monitored start)	< 175 ms (automatic start) < 175 ms (manual, monitored start)
Typical release time	25 ms (when actuation is via the sensor circuit) 60 ms (when controlled via A1)	< 20 ms (when controlled via A1 or S12 and S22.)
Recovery time	< 500 ms	< 500 ms
Output data		
Contact type	2 enabling current paths	3 enabling current paths
Contact material	$AgSnO_2$	$AgSnO_2$
Switching voltage	min. 10 V AC/DC / max. 250 V AC/DC (observe the load curve)	min. 12 V AC/DC / max. 250 V AC/DC (observe the load curve)
Limiting continuous current	6 A	6 A (observe derating)
Inrush current	min. 10 mA / max. 6 A	min. 3 mA, max. 6 A
Switching capacity	min. 100 mW	min. 60 mW
Short-circuit protection of the output circuits	10 A gL/gG 4 A gL/gG (for low-demand applications)	6 A gL/gG (N/O contact) 4 A gL/gG (for low-demand applications)
Alarm outputs		
Number of outputs	1	1 (digital, PNP)
Output current	max. 100 mA	max. 100 mA
Short-circuit protection	-	no
General data		
Ambient temperature range	-20°C ... 55°C (observe derating)	-40°C ... 55°C (observe derating)
Air and creepage distances between the circuits	DIN EN 50178	DIN EN 50178
Rated surge voltage/insulation	Safe isolation, reinforced insulation 6 kV between input circuit and enabling current path (13/14) and enabling current path (23/24) Basic insulation 4 kV between all current paths and housing	Safe isolation, reinforced insulation 6 kV between input circuit and enabling current path (13/14) and enabling current path (23/24) and enabling current path (33/34) Basic insulation 4 kV between all current paths and housing
Screw connection rigid / flexible / AWG	0.2 - 2.5 mm^2 / 0.2 - 2.5 mm^2 / 24 - 12	0.2 - 2.5 mm^2 / 0.2 - 2.5 mm^2 / 24 - 12
Spring-cage connection rigid / flexible / AWG	0.2 - 2.5 mm^2 / 0.2 - 2.5 mm^2 / 24 - 14	0.2 - 1.5 mm^2 / 0.2 - 1.5 mm^2 / 24 - 16
Dimensions W / H / D — Screw version	22.5 mm / 112.2 mm / 114.5 mm	12.5 mm / 112.2 mm / 114.5 mm
Dimensions W / H / D — Spring-cage version	22.5 mm / 117.5 mm / 114.5 mm	12.5 mm / 116.6 mm / 114.5 mm
EMC note	Class A product, see page 527	Class A product, see page 527

Description	Ordering data: Type	Order No.	Pcs./Pkt.	Ordering data: Type	Order No.	Pcs./Pkt.
Emergency stop, safety door, and light grid monitoring						
Screw connection	**PSR-MC38-2NO-1DO-24DC-SC**	1009831	1			
Push-in connection	**PSR-MC38-2NO-1DO-24DC-PI**	1009832	1			
Emergency stop, safety door, and light grid monitoring						
with screw connection				**PSR-MC40-3NO-1DO-24DC-SC**	2700569	1
with spring-cage connection				**PSR-MC40-3NO-1DO-24DC-SP**	2700570	1

Safety relay modules for machine building – PSRmini

Highly compact safety relays

- Manual, monitored, and automatic activation in a single device
- Up to Cat. 4/PL e in accordance with EN ISO 13849-1, SILCL 3 in accordance with IEC 62061

PSR-MC42: safety relay with IO-Link for PSRswitch

- 2 sensor circuits
- 2 enabling current paths
- IO-Link interface

PSR-MC50: monitoring of non-equivalent signal generators

- Two-channel non-equivalent control
- 3 enabling current paths, 1 digital signal output
- Basic insulation/reinforced insulation in part

new

IO-Link

PL EN ISO 13849

SILCL IEC 62061

2 sensor circuits, 2 enabling current paths

H D W

PL EN ISO 13849

SILCL IEC 62061

3 enabling current paths, for non-equivalent sensor circuits

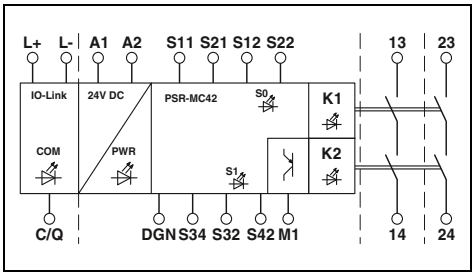

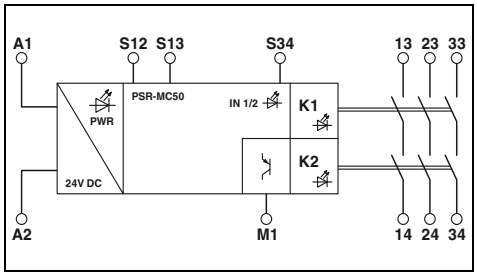

	Technical data	Technical data
Input data		
Rated control supply voltage U_S	24 V DC -20% / +25% (provide external protection)	24 V DC -15% / +10%
Rated control supply current I_S	typ. 60 mA	typ. 80 mA
Typical response time	< 220 ms (automatic start) < 175 ms (manual, monitored start)	< 175 ms (automatic start) < 175 ms (manual, monitored start)
Typical release time	< 20 ms (on demand via the sensor circuit) < 20 ms (on demand via A1)	< 20 ms (when controlled via A1 or S12 and S13.)
Recovery time	< 500 ms	< 500 ms
Output data		
Contact type	2 enabling current paths	3 enabling current paths
Contact material	$AgSnO_2$	$AgSnO_2$
Switching voltage	min. 12 V AC/DC / max. 250 V AC/DC (observe the load curve)	min. 12 V AC/DC / max. 250 V AC/DC (observe the load curve)
Limiting continuous current	6 A	6 A (observe derating)
Inrush current	min. 3 mA / max. 6 A	min. 3 mA, max. 6 A
Switching capacity	min. 60 mW	min. 60 mW
Short-circuit protection of the output circuits	6 A gL/gG 4 A gL/gG (for low-demand applications)	6 A gL/gG (N/O contact) 4 A gL/gG (for low-demand applications)
Alarm outputs		
Number of outputs	1	1 (digital, PNP)
Output current	max. 100 mA	max. 100 mA
Short-circuit protection	-	no
General data		
Ambient temperature range	-25°C ... 60°C (observe derating)	-40°C ... 55°C (observe derating)
Air and creepage distances between the circuits	DIN EN 60947-1	DIN EN 50178
Rated surge voltage/insulation	Basic insulation 4 kV between all current paths and housing Safe isolation, reinforced insulation 4 kV between input circuit and enabling current path (13/14) and enabling current path (23/24)	Safe isolation, reinforced insulation 6 kV between input circuit and enabling current path (13/14) and enabling current path (23/24) and enabling current path (33/34) Basic insulation 4 kV between all current paths and housing
Screw connection rigid / flexible / AWG	0.2 - 2.5 mm^2 / 0.2 - 2.5 mm^2 / 24 - 12	0.2 - 2.5 mm^2 / 0.2 - 2.5 mm^2 / 24 - 12
Spring-cage connection rigid / flexible / AWG	0.2 - 1.5 mm^2 / 0.2 - 1.5 mm^2 / 24 - 16	0.2 - 1.5 mm^2 / 0.2 - 1.5 mm^2 / 24 - 16
Dimensions W / H / D — Screw version	17.5 mm / 112.2 mm / 114.5 mm	12.5 mm / 112.2 mm / 114.5 mm
Dimensions W / H / D — Spring-cage version	17.5 mm / 116.6 mm / 114.5 mm	12.5 mm / 116.6 mm / 114.5 mm
EMC note	Class A product, see page 527	Class A product, see page 527

Description	Ordering data: Type	Order No.	Pcs./Pkt.	Ordering data: Type	Order No.	Pcs./Pkt.
Safety relay with IO-Link for PSRswitch						
with screw connection	**PSR-MC42-2NO-1DO-24DC-SC**	2702901	1			
with spring-cage connection	**PSR-MC42-2NO-1DO-24DC-SP**	2702902	1			
Monitoring of non-equivalent signal generators						
with screw connection				**PSR-MC50-3NO-1DO-24DC-SC**	2700553	1
with spring-cage connection				**PSR-MC50-3NO-1DO-24DC-SP**	2700564	1

Highly compact safety relays

– 2 enabling current paths, 1 digital signal output
– Basic insulation/reinforced insulation in part
– Automatic activation

PSR-MC60:
For two-hand control devices in acc. with EN 574 Type IIIA
– Single-channel control

PSR-MC62:
For two-hand control devices in acc. with EN 574 Type IIIC
– Two-channel control

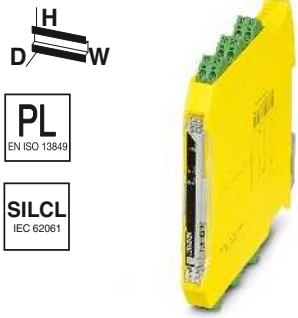

Type IIIA in acc. with EN 574, up to Cat. 1/PL c in acc. with EN ISO 13849-1, SILCL 1 in acc. with IEC EN 62061

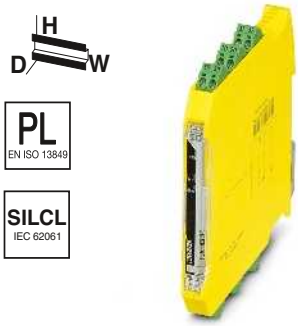

Type IIIC in acc. with EN 574, up to Cat. 4/PL e in acc. with EN ISO 13849-1, SILCL 3 in acc. with IEC EN 62061

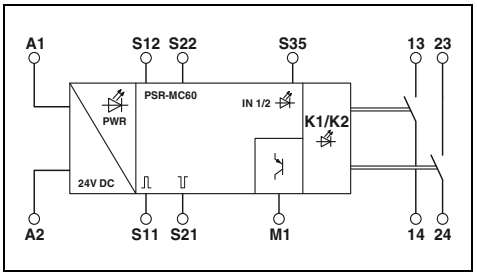

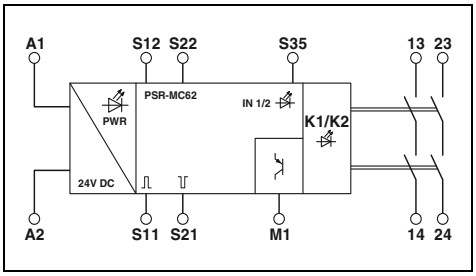

	Technical data	Technical data
Input data		
Rated control supply voltage U_S	24 V DC -20% / +25%	24 V DC -20% / +25%
Rated control supply current I_S	typ. 35 mA	typ. 40 mA
Typical response time	< 40 ms	< 50 ms
Typical release time	< 10 ms (when controlled via S12/S22) < 5 ms (when interrupted via A1; applicative deactivation via A1/A2 is not permitted)	< 10 ms (when controlled via S12/S22) < 5 ms (when interrupted via A1; applicative deactivation via A1/A2 is not permitted)
Recovery time	< 500 ms	< 500 ms
Output data		
Contact type	2 enabling current paths	2 enabling current paths
Contact material	$AgSnO_2$ (enabling current path)	$AgSnO_2$ (enabling current path)
Switching voltage	min. 12 V AC/DC / max. 250 V AC/DC (observe the load curve)	min. 12 V AC/DC / max. 250 V AC/DC (observe the load curve)
Limiting continuous current	6 A (observe derating)	6 A (observe derating)
Inrush current	min. 3 mA / max. 6 A	min. 3 mA, max. 6 A
Switching capacity	min. 60 mW	min. 60 mW
Short-circuit protection of the output circuits	6 A gL/gG (N/O contact)	6 A gL/gG (N/O contact)
Alarm outputs		
Number of outputs	1 (digital, PNP)	1 (digital, PNP)
Output current	max. 100 mA	max. 100 mA
Short-circuit protection	Yes	Yes
General data		
Ambient temperature range	-35°C ... 60°C (observe derating)	-35°C ... 60°C (observe derating)
Air and creepage distances between the circuits	DIN EN 50178	DIN EN 50178
Rated surge voltage/insulation	Basic insulation 4 kV between all current paths and housing Safe isolation, reinforced insulation 6 kV: between (A1, A2, S11, S12, S21, S22, S35, M1) and enabling current path (13/14) between (A1, A2, S11, S12, S21, S22, S35, M1) and enabling current path (23/24) between enabling current paths	Basic insulation 4 kV between all current paths and housing Safe isolation, reinforced insulation 6 kV: between (A1, A2, S11, S12, S21, S22, S35, M1) and enabling current path (13/14) between (A1, A2, S11, S12, S21, S22, S35, M1) and enabling current path (23/24) between enabling current paths
Screw connection rigid / flexible / AWG	0.2 - 2.5 mm^2 / 0.2 - 2.5 mm^2 / 24 - 12	0.2 - 2.5 mm^2 / 0.2 - 2.5 mm^2 / 24 - 12
Spring-cage connection rigid / flexible / AWG	0.2 - 1.5 mm^2 / 0.2 - 1.5 mm^2 / 24 - 16	0.2 - 1.5 mm^2 / 0.2 - 1.5 mm^2 / 24 - 16
Dimensions W / H / D — Screw version	12.5 mm / 112.2 mm / 114.5 mm	12.5 mm / 112.2 mm / 114.5 mm
Dimensions W / H / D — Spring-cage version	12.5 mm / 116.6 mm / 114.5 mm	12.5 mm / 116.6 mm / 114.5 mm
EMC note	Class A product, see page 527	Class A product, see page 527

Description	Ordering data: Type	Order No.	Pcs./Pkt.	Ordering data: Type	Order No.	Pcs./Pkt.
Monitoring of two-hand control devices						
with screw connection	**PSR-MC60-2NO-1DO-24DC-SC**	2700571	1	**PSR-MC62-2NO-1DO-24DC-SC**	2700574	1
with spring-cage connection	**PSR-MC60-2NO-1DO-24DC-SP**	2700572	1	**PSR-MC62-2NO-1DO-24DC-SP**	2700575	1

Safety relay modules for machine building – PSRmini

Highly compact safety relays with time function

Emergency stop, safety door, and light grid monitoring

- Two-channel control
- 2 enabling current paths, 1 digital signal output
- Release and on delay 0.2 s up to 60 s
- Basic insulation/reinforced insulation in part
- Manual, monitored, and automatic activation in a single device
- Can be retriggered

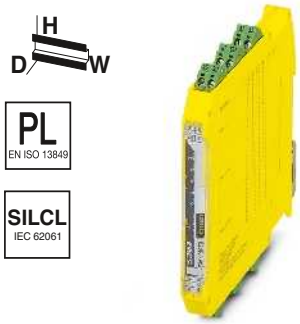

Up to Cat. 1/PL c in accordance with EN ISO 13849-1, SILCL 1 in accordance with IEC 62061

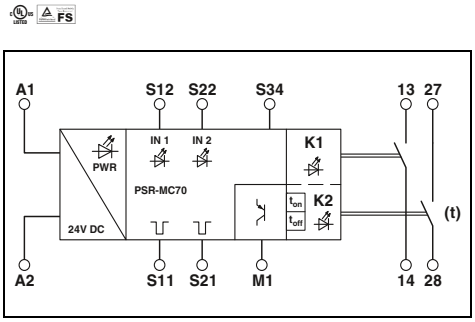

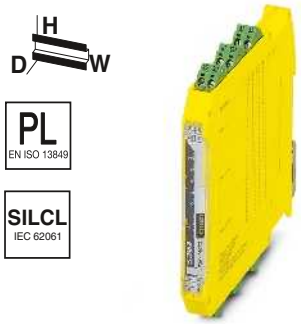

Up to Cat. 4/PL e in accordance with EN ISO 13849-1, SILCL 3 in accordance with IEC 62061

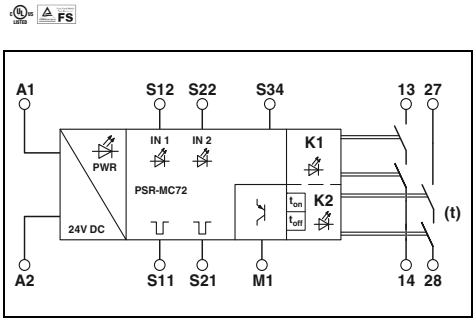

	Technical data	Technical data
Input data		
Rated control supply voltage U_S	24 V DC -20% / +25%	24 V DC -20% / +25%
Rated control supply current I_S	typ. 50 mA	typ. 60 mA
Typical response time	< 35 ms (automatic start) < 30 ms (manual, monitored start)	< 35 ms (automatic start) < 30 ms (manual, monitored start)
Typical release time	< 20 ms (when controlled via S12 (only for undelayed contact 13/14)) < 5 ms (when interrupted via A1; applicative deactivation via A1/A2 is not permitted)	< 25 ms (when controlled via S12 (only for undelayed contact 13/14)) < 5 ms (when interrupted via A1; applicative deactivation via A1/A2 is not permitted)
Delay time range	0.2 s ... 60 s ±5% (can be set for 27/28)	0.2 s ... 60 s ±5% (can be set for 27/28)
Output data		
Contact type	2 enabling current paths	2 enabling current paths
Contact material	$AgSnO_2$	$AgSnO_2$
Switching voltage	min. 12 V AC/DC / max. 250 V AC/DC (observe the load curve)	min. 12 V AC/DC / max. 250 V AC (observe the load curve)
Limiting continuous current	6 A (observe derating)	6 A (observe derating)
Inrush current	min. 3 mA / max. 6 A	min. 3 mA, max. 6 A
Switching capacity	min. 60 mW	min. 60 mW
Short-circuit protection of the output circuits	6 A gL/gG (N/O contact) 4 A gL/gG (for low-demand applications)	6 A gL/gG (N/O contact) 4 A gL/gG (for low-demand applications)
Alarm outputs		
Number of outputs	1 (digital, PNP)	1 (digital, PNP)
Output current	max. 100 mA	max. 100 mA
Short-circuit protection	Yes	Yes
General data		
Ambient temperature range	-35°C ... 60°C (observe derating)	-35°C ... 60°C (observe derating)
Air and creepage distances between the circuits	DIN EN 50178	DIN EN 50178
Rated surge voltage/insulation	Basic insulation 4 kV: between all current paths and housing Safe isolation, reinforced insulation 6 kV: between (A1, A2, S11, S12, S21, S22, S34, M1) and enabling current path (13/14) between (A1, A2, S11, S12, S21, S22, S34, M1) and enabling current path (27/28) between enabling current paths	Basic insulation 4 kV: between all current paths and housing Safe isolation, reinforced insulation 6 kV: between (A1, A2, S11, S12, S21, S22, S34, M1) and enabling current path (13/14) between (A1, A2, S11, S12, S21, S22, S34, M1) and enabling current path (27/28) between enabling current paths
Screw connection rigid / flexible / AWG	0.2 - 2.5 mm^2 / 0.2 - 2.5 mm^2 / 24 - 12	0.2 - 2.5 mm^2 / 0.2 - 2.5 mm^2 / 24 - 12
Spring-cage connection rigid / flexible / AWG	0.2 - 1.5 mm^2 / 0.2 - 1.5 mm^2 / 24 - 16	0.2 - 1.5 mm^2 / 0.2 - 1.5 mm^2 / 24 - 16
Dimensions W / H / D — Screw version	12.5 mm / 112.2 mm / 114.5 mm	12.5 mm / 112.2 mm / 114.5 mm
Dimensions W / H / D — Spring-cage version	12.5 mm / 116.6 mm / 114.5 mm	12.5 mm / 116.6 mm / 114.5 mm
EMC note	Class A product, see page 527	Class A product, see page 527

Description	Ordering data: Type	Order No.	Pcs./Pkt.	Ordering data: Type	Order No.	Pcs./Pkt.
Emergency stop, safety door, and light grid monitoring						
with screw connection	**PSR-MC70-2NO-1DO-24DC-SC**	2702094	1	**PSR-MC72-2NO-1DO-24DC-SC**	2702096	1
with spring-cage connection	**PSR-MC70-2NO-1DO-24DC-SP**	2702095	1	**PSR-MC72-2NO-1DO-24DC-SP**	2702097	1

new

Highly compact safety relays with time function

Emergency stop, safety door, and light grid monitoring

- Two-channel control
- 5 enabling current paths, 1 digital signal output
- Release and on delay 0.2 s up to 300 s
- Basic insulation/reinforced insulation in part
- Manual, monitored, and automatic activation in a single device
- Can be retriggered

Up to Cat. 4/PL e in accordance with EN ISO 13849-1, SILCL 3 in accordance with IEC 62061

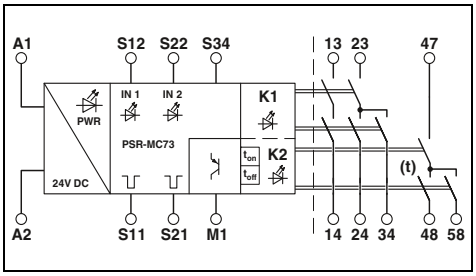

Technical data

Input data	
Rated control supply voltage U_S	24 V DC -20% / +25%
Rated control supply current I_S	typ. 80 mA
Typical response time	< 40 ms (automatic start) < 30 ms (manual, monitored start)
Typical release time	< 25 ms (when controlled via S12 and S22 (only for undelayed contacts)) < 5 ms (when controlled via A1; applicative deactivation via A1/A2 is not permitted)
Delay time range	0.2 s ... 300 s ±5% (can be set for 47/48/58)
Recovery time	500 ms (following demand of the safety function)
Output data	
Contact type	5 enabling current paths
Contact material	$AgSnO_2$
Switching voltage	min. 12 V AC/DC / max. 250 V AC (observe the load curve)
Limiting continuous current	6 A
Inrush current	min. 3 mA / max. 6 A
Switching capacity	min. 60 mW
Short-circuit protection of the output circuits	6 A gL/gG 4 A gL/gG (for low-demand applications)
Alarm outputs	
Number of outputs	1
Output current	max. 100 mA
Short-circuit protection	Yes
General data	
Ambient temperature range	-35°C ... 55°C (observe derating)
Air and creepage distances between the circuits	DIN EN 50178
Rated surge voltage/insulation	Basic insulation 4 kV between all current paths and housing Safe isolation, reinforced insulation 6 kV between (A1, A2, S11, S12, S21, S22, S34, M1) and enabling current path (13/14) and enabling current path (23/24) and enabling current path (47/48/58)
Screw connection rigid / flexible / AWG	0.2 - 2.5 mm^2 / 0.2 - 2.5 mm^2 / 24 - 12
Spring-cage connection rigid / flexible / AWG	0.2 - 1.5 mm^2 / 0.2 - 1.5 mm^2 / 24 - 16
Dimensions W / H / D — Screw version	22.5 mm / 112.2 mm / 114.5 mm
Dimensions W / H / D — Spring-cage version	22.5 mm / 117.5 mm / 114.5 mm

Ordering data

Description	Type	Order No.	Pcs./Pkt.
Emergency stop, safety door, and light grid monitoring			
with screw connection	**PSR-MC73-5NO-1DO-24DC-SC**	1015533	1
with spring-cage connection	**PSR-MC73-5NO-1DO-24DC-SP**	1015526	1

Extension module

- 5 enabling current paths,
  1 confirmation current path
- Basic insulation/reinforced insulation in part
- In conjunction with a suitable evaluating device:
  Up to Cat. 4/PL e in accordance with EN ISO 13849-1, SILCL 3 in accordance with IEC EN 62061

Contact extension

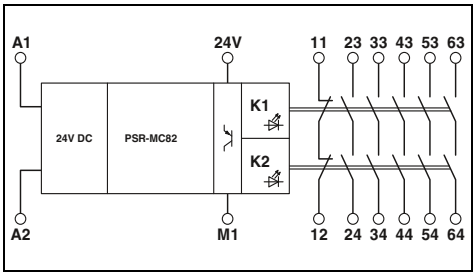

Technical data

Input data	
Rated control supply voltage U_S	24 V DC -20% / +25%
Rated control supply current I_S	typ. 80 mA
Typical response time	< 50 ms
Typical release time	< 25 ms (when controlled via A1/A2)
Recovery time	< 100 ms
Output data	
Contact type	5 enabling current paths 1 confirmation current path
Contact material	$AgSnO_2$
Switching voltage	min. 5 V AC/DC / max. 24 V DC (enabling current path 23/24) / max. 250 V AC/DC (all other enabling current paths, observe load curve)
Limiting continuous current	6 A (observe derating)
Inrush current	min. 10 mA / max. 6 A
Switching capacity	min. 50 mW
Short-circuit protection of the output circuits	10 A gL/gG 6 A gL/gG (for low-demand applications)
Alarm outputs	
Number of outputs	1 (digital, PNP)
Output current	max. 100 mA
Short-circuit protection	Yes
General data	
Ambient temperature range	-20°C ... 60°C (observe derating)
Air and creepage distances between the circuits	DIN EN 50178
Rated surge voltage/insulation	Basic insulation 4 kV between all current paths Basic insulation 4 kV between all current paths and housing Safe isolation, reinforced insulation 6 kV between input circuits and enabling current paths 33/34, 43/44, and 63/64
Screw connection rigid / flexible / AWG	0.2 - 2.5 mm^2 / 0.2 - 2.5 mm^2 / 24 - 12
Spring-cage connection rigid / flexible / AWG	0.2 - 1.5 mm^2 / 0.2 - 1.5 mm^2 / 24 - 16
Dimensions Screw version	17.5 mm / 112.2 mm / 114.5 mm
W / H / D Spring-cage version	17.5 mm / 116.6 mm / 114.5 mm
EMC note	Class A product, see page 527

Ordering data

Description	Type	Order No.	Pcs./Pkt.
Extension module			
with screw connection	**PSR-MC82-5NO-1NC-1DO-24DC-SC**	2702382	1
with spring-cage connection	**PSR-MC82-5NO-1NC-1DO-24DC-SP**	2702383	1

Safety relays for emergency stop and safety door monitoring

Find out more with the web code

Detailed information on these products can be found on our website. Simply enter # and numbers in the search field.

Your web code: #1409

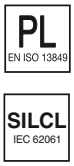

Screw connection

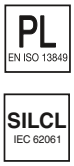

Spring-cage connection

Description	Ordering data			Ordering data		
	Type	Order No.	Pcs./Pkt.	Type	Order No.	Pcs./Pkt.
Emergency stop and safety door monitoring, basic insulation, single-channel control, activation: manual and automatic, 4 enabling and 1 signaling current path, nominal input voltage 24 V AC/DC, Cat. 1/PL c in accordance with EN ISO 13849-1, SILCL 1 in accordance with IEC EN 62061	PSR-SCP- 24UC/ESA2/4X1/1X2/B	2963802	1	PSR-SPP- 24UC/ESA2/4X1/1X2/B	2963954	1
Emergency stop and safety door monitoring, basic insulation, single-channel control, activation: manual, monitored, and automatic, 3 enabling and 1 signaling current path, nominal input voltage 230 V AC, Cat. 1/PL c in accordance with EN ISO 13849-1, SILCL 1 in accordance with IEC EN 62061	PSR-SCP-230AC/ESAM2/3X1/1X2/B	2901430	1	PSR-SPP-230AC/ESAM2/3X1/1X2/B	2901431	1
Emergency stop and safety door monitoring, basic insulation, single- and two-channel control, activation: manual, monitored, and automatic, 3 enabling and 1 signaling current path, up to Cat. 4/PL e in accordance with EN ISO 13849-1, SILCL 3 in accordance with IEC EN 62061						
- Nominal input voltage 24 V AC/DC,	PSR-SCP- 24UC/ESAM4/3X1/1X2/B	2900509	1	PSR-SPP- 24UC/ESAM4/3X1/1X2/B	2900510	1
- Nominal input voltage 42 - 48 V AC/DC	PSR-SCP-42-48UC/ESAM4/3X1/1X2B	2901416	1	PSR-SPP-42-48UC/ESAM4/3X1/1X2B	2901417	1
- Nominal input voltage 120 V AC/DC	PSR-SCP-120UC/ESAM4/3X1/1X2/B	2901422	1	PSR-SPP-120UC/ESAM4/3X1/1X2/B	2901425	1
- Nominal input voltage 230 V AC/DC	PSR-SCP-230UC/ESAM4/3X1/1X2/B	2901428	1	PSR-SPP-230UC/ESAM4/3X1/1X2/B	2901429	1
Emergency stop and safety door monitoring, reinforced insulation, single- and two-channel control, activation: manual, monitored, and automatic, nominal input voltage 24 V AC/DC, up to Cat. 4/PL e in accordance with EN ISO 13849-1, SILCL 3 in accordance with IEC EN 62061						
- 2 enabling and 1 signaling current path	PSR-SCP- 24UC/ESAM4/2X1/1X2	2900525	1	PSR-SPP- 24UC/ESAM4/2X1/1X2	2900526	1
- 8 enabling and 1 signaling current path	PSR-SCP- 24UC/ESAM4/8X1/1X2	2963912	1	PSR-SPP-24UC/ESAM4/8X1/1X2	2963996	1

Safety relay with time functions

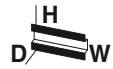

PL
EN ISO 13849

SILCL
IEC 62061

Emergency stop, safety door, and light grid monitoring

- Single and two-channel control
- 2 or 3 undelayed and 2 dropout delayed contacts
- Manual, monitored, and automatic activation in a single device
- Nominal input voltage 24 V DC
- Up to Cat. 3/4 and PL d/e in accordance with EN ISO 13849-1, SILCL 3 in accordance with IEC 62061

Find out more with the web code

Detailed information on these products can be found on our website. Simply enter # and numbers in the search field.

Your web code: #1409

	Ordering data		
Description	Type	Order No.	Pcs./Pkt.
Emergency stop, safety door, and light grid monitoring, adjustable release delay time 0.1 s ... 30 s			
with screw connection	PSR-SCP- 24DC/ESD/4X1/30	2981800	1
with spring-cage connection	PSR-SPP- 24DC/ESD/4X1/30	2981813	1
Emergency stop, safety door, and light grid monitoring, adjustable release delay time 0.2 s ... 300 s			
with screw connection	PSR-SCP-24DC/ESD/5X1/1X2/300	2981428	1
with spring-cage connection	PSR-SPP-24DC/ESD/5X1/1X2/300	2981431	1
Emergency stop, safety door, and light grid monitoring, fixed release delay time 0.5 s			
with screw connection	PSR-SCP- 24DC/ESD/5X1/1X2/0T 5	2981101	1
with spring-cage connection	PSR-SPP- 24DC/ESD/5X1/1X2/0T 5	2981130	1
Emergency stop, safety door, and light grid monitoring, fixed release delay time 1 s			
with screw connection	PSR-SCP- 24DC/ESD/5X1/1X2/ T 1	2981143	1
with spring-cage connection	PSR-SPP- 24DC/ESD/5X1/1X2/ T 1	2981156	1
Emergency stop, safety door, and light grid monitoring, fixed release delay time 3 s			
with screw connection	PSR-SCP- 24DC/ESD/5X1/1X2/ T 3	2981224	1
with spring-cage connection	PSR-SPP- 24DC/ESD/5X1/1X2/ T 3	2981237	1
Emergency stop, safety door, and light grid monitoring, fixed release delay time 5 s			
with screw connection	PSR-SCP- 24DC/ESD/5X1/1X2/ T 5	2981266	1
with spring-cage connection	PSR-SPP- 24DC/ESD/5X1/1X2/ T 5	2981279	1

Safety relay for emergency stop, safety door, and light grid monitoring

- Single and two-channel control
- 2 or 3 enabling current paths, 1 signaling current path or digital signal output
- Manual, monitored, and automatic activation in a single device
- Up to Cat. 4/PL e in accordance with EN ISO 13849-1, SILCL 3 in accordance with IEC 62061

Safety relay for two-hand control devices

- For two-hand control devices in accordance with EN 574 Type IIIC
- Two-channel control
- 2 enabling current paths, 1 signaling current path
- Automatic activation
- Concurrence monitoring < 0.5 s
- Up to Cat. 4/PL e in accordance with EN ISO 13849-1, SILCL 3 in accordance with IEC 62061

Find out more with the web code

Detailed information on these products can be found on our website. Simply enter # and numbers in the search field.

Your web code: #1409

Notes:

Moreover, the PSR-SDC4 is also suitable for light grid monitoring, see page 233

PL
EN ISO 13849

SILCL
IEC 62061

Description	Ordering data		
	Type	Order No.	Pcs./Pkt.
Light grid, emergency stop, and safety door monitoring, one and two-channel, activation: manually monitored and automatic			
with screw connection	PSR-SCP- 24UC/ESL4/3X1/1X2/B	2981059	1
with spring-cage connection	PSR-SPP- 24UC/ESL4/3X1/1X2/B	2981062	1
Master module for emergency stop, safety door, light grid, and magnetic switch			
with screw connection	PSR-SCP- 24DC/SDC4/2X1/B	2981486	1
with spring-cage connection	PSR-SPP- 24DC/SDC4/2X1/B	2981499	1
Two-hand controls and safety door monitoring, two-channel, with cross-circuit detection, activation: automatic			
with screw connection	PSR-SCP- 24UC/THC4/2X1/1X2	2963721	1
with spring-cage connection	PSR-SPP- 24UC/THC4/2X1/1X2	2963983	1

Extension modules

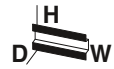

PL
EN ISO 13849

SILCL
IEC 62061

Contact extension

- Single and two-channel control
- 5 enabling, 1 signaling, and 1 confirmation current path
- Option of basic insulation or reinforced insulation
- Up to Cat. 4/PL e in accordance with EN ISO 13849-1, SILCL 3 in accordance with IEC 62061

Find out more with the web code

Detailed information on these products can be found on our website. Simply enter # and numbers in the search field.

Your web code: #1409

	Ordering data		
Description	Type	Order No.	Pcs./Pkt.
Extension module, reinforced insulation, single- or two-channel control, 5 enabling, 1 signaling, and 1 confirmation current path			
with screw connection	PSR-SCP- 24UC/URM4/5X1/2X2	2963734	1
with spring-cage connection	PSR-SPP- 24UC/URM4/5X1/2X2	2964005	1
Extension module, basic insulation, single-channel control, 5 enabling, 1 signaling, and 1 confirmation current path			
with screw connection	PSR-SCP- 24UC/URM4/5X1/2X2/B	2981033	1
with spring-cage connection	PSR-SPP- 24UC/URM4/5X1/2X2/B	2981046	1
Extension module, basic insulation, for electrosensitive protective equipment such as light grids, single- or two-channel control, 3 enabling and 1 signaling current path			
with screw connection	PSR-SCP-24DC/URML4/3X1/1X2/B	2903583	1
with spring-cage connection	PSR-SPP-24DC/URML4/3X1/1X2/B	2903584	1
Extension module, basic insulation, with wide-range input (42 ... 230 V AC/DC), single- or two-channel control, 4 enabling, 1 signaling, and 1 confirmation current path			
with screw connection	PSR-SCP-42-230UC/URM4/4NO/2NC	2702924	1
with spring-cage connection	PSR-SPP-42-230UC/URM4/4NO/2NC	2702925	1

Modular safety relay system

The PSR safety relay system reduces planning effort, simplifies wiring, and minimizes storage costs.

The PSR-SDC4 multifunctional master monitors the various safety-related signals.

The PSR-URM4/B and PSR-URD3 extension devices can be used to integrate additional undelayed contacts and contacts with dropout delay via the PSR-TBUS DIN rail connector.

The PSR-SIM4 interface module and PSR-SACB sensor box are suitable for wiring several safety switches with N/C or N/O contacts.

- Single and two-channel control of the master
- Manual, monitored, and automatic activation in a single device
- With or without cross-circuit detection
- Up to Cat. 4/PL e in accordance with EN ISO 13849-1, SILCL 3 in accordance with IEC 62061
- Extension modules with adjustable release time:
  Up to Cat. 3/PL d in accordance with EN ISO 13849-1, SILCL 2 in accordance with IEC EN 62061

Ordering data

Description	Type	Order No.	Pcs./Pkt.
Master module for emergency stop, safety door, light grid, and magnetic switch			
with screw connection	**PSR-SCP- 24DC/SDC4/2X1/B**	2981486	1
with spring-cage connection	**PSR-SPP- 24DC/SDC4/2X1/B**	2981499	1
Extension module, with single-channel control			
with screw connection	**PSR-SCP- 24DC/URM4/4X1/2X2/B**	2981677	1
with spring-cage connection	**PSR-SPP- 24DC/URM4/4X1/2X2/B**	2981680	1
Extension module with dropout delayed contacts (adjustable up to max. 3 s), single-channel control			
with screw connection	**PSR-SCP- 24DC/URD3/4X1/2X2/3**	2981732	1
with spring-cage connection	**PSR-SPP- 24DC/URD3/4X1/2X2/3**	2981745	1
Extension module with dropout delayed contacts (adjustable up to max. 30 s), single-channel control			
with screw connection	**PSR-SCP- 24DC/URD3/4X1/2X2**	2981512	1
with spring-cage connection	**PSR-SPP- 24DC/URD3/4X1/2X2**	2981525	1
Interface module, for up to four safety sensors/switches with N/O or N/C contacts			
with screw connection	**PSR-SCP- 24DC/SIM4**	2981936	1
with spring-cage connection	**PSR-SPP- 24DC/SIM4**	2981949	1
Sensor box, with M12 slots and connected master cable, for magnetic limit switch with N/C contacts / N/O contacts, LEDs for signaling			
Length of cable: 5 m	**PSR-SACB-4/4-L- 5,0PUR-SD**	2981871	1
Length of cable: 10 m	**PSR-SACB-4/4-L-10,0PUR-SD**	2981884	1

Accessories

PSR-TBUS DIN rail connector, for supplying/controlling/monitoring (depending on the module)	**PSR-TBUS**	2890425	50
PSR TBUS dummy plug	**PSR-TBUS-TP**	2981716	50

Multifunctional safety relays

You can easily implement three safety functions, such as emergency stop, safety door or light grid monitoring, with the PSR-MXF device range – and all using a single device.

In total, there are four function versions available each with three connection methods.

Features:

- Single and two-channel control
- 2 x 2 enabling current paths, 2 digital signal outputs
- Basic insulation
- Manual, monitored, and automatic activation in a single device
- No software configuration required
- Up to Cat. 4/PL e in accordance with EN ISO 13849-1, SILCL 3 in accordance with IEC 62061

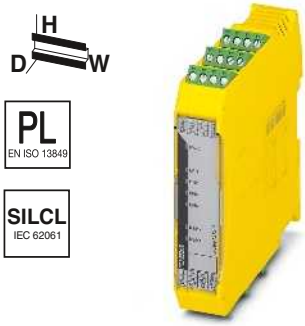

Screw connection

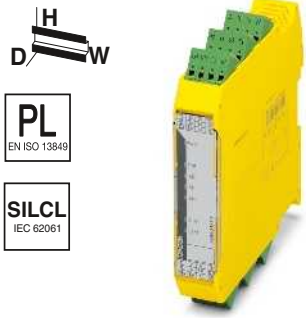

Spring-cage connection

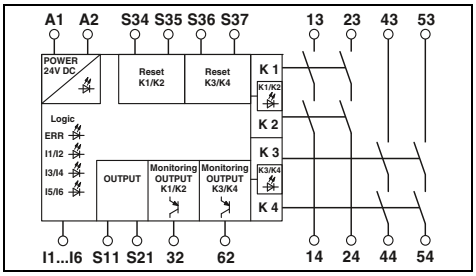

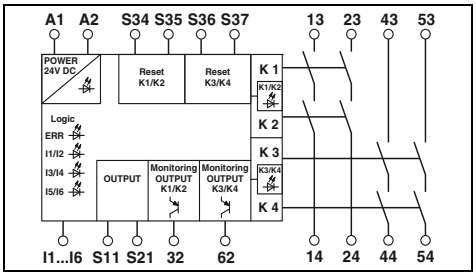

	Technical data	Technical data
Input data		
Nominal input voltage U_N	24 V DC	24 V DC
Permissible range (with reference to U_N)	0.85 ... 1.1	0.85 ... 1.1
Typical current consumption (with reference to U_N)	125 mA (with actuated relays) / 55 mA (two-channel 24 V/0 V + max. 200 mA control (message outputs 32/62) with non-actuated relays)	125 mA (with actuated relays) / 55 mA (two-channel 24 V/0 V + max. 200 mA control (message outputs 32/62) with non-actuated relays)
Recovery time	1 s (availability time after activation of sensor circuit: 100ms)	1 s (availability time after activation of sensor circuit: 100ms)
Output data		
Contact type	4 enabling current paths 2 semiconductor alarm outputs	4 enabling current paths 2 semiconductor alarm outputs
Contact material	AgCuNi, +0.2 -0.4 µm Au	AgCuNi, +0.2 -0.4 µm Au
Max./min. switching voltage	250 V AC/DC / 10 V AC/DC	250 V AC/DC / 10 V AC/DC
Limiting continuous current	6 A (N/O contact), max. 100 mA (alarm output (24 V DC))	6 A (N/O contact), max. 100 mA (alarm output (24 V DC))
Max./min. inrush current	6 A / 10 mA	6 A / 10 mA
Switching capacity (360/h cycles)	5 A (0.1 Hz; DC13; 24 V)	5 A (0.1 Hz; DC13; 24 V)
Switching capacity (3600/h cycles)	3 A (AC15; 230 V)	3 A (AC15; 230 V)
Short-circuit protection of the output circuits	6 A gL/gG NEOZED (N/O contact) 4 A gL/gG NEOZED (for low-demand applications)	6 A gL/gG NEOZED (N/O contact) 4 A gL/gG NEOZED (for low-demand applications)
General data		
Ambient temperature range	-20°C ... 45°C (see derating curve)	-20°C ... 45°C (see derating curve)
Air and creepage distances between the circuits	DIN EN 50178/VDE 0160	DIN EN 50178/VDE 0160
Rated surge voltage/insulation	4 kV/basic insulation (safe isolation, reinforced insulation and 6 kV between input circuit, enabling current paths and safety circuit 1 (13/14, 23/24) and safety circuit 2 (43/44, 53/54).)	4 kV/basic insulation (safe isolation, reinforced insulation and 6 kV between input circuit, enabling current paths and safety circuit 1 (13/14, 23/24) and safety circuit 2 (43/44, 53/54).)
Dimensions W / H / D	22.5 mm / 112.2 mm / 114.5 mm	22.5 mm / 117.4 mm / 114.5 mm
EMC note	Class A product, see page 527	Class A product, see page 527

Description	Ordering data: Type	Order No.	Pcs./Pkt.	Ordering data: Type	Order No.	Pcs./Pkt.
Multifunctional safety relay, three safety functions, single- and two-channel, two local shutdown levels						
- Emergency stop and safety door monitoring	**PSR-SCP- 24DC/MXF1/4X1/2X2/B**	2902725	1	**PSR-SPP-24DC/MXF1/4X1/2X2/B**	2902726	1
- Emergency stop and magnetic switch monitoring	**PSR-SCP-24DC/MXF2/4X1/2X2/B**	2903254	1	**PSR-SPP-24DC/MXF2/4X1/2X2/B**	2903255	1
- Emergency stop, safety door, and light grid monitoring	**PSR-SCP-24DC/MXF3/4X1/2X2/B**	2903257	1	**PSR-SPP-24DC/MXF3/4X1/2X2/B**	2903258	1
- Emergency stop, magnetic switch, and light grid monitoring	**PSR-SCP-24DC/MXF4/4X1/2X2/B**	2903260	1	**PSR-SPP-24DC/MXF4/4X1/2X2/B**	2903261	1

PL
EN ISO 13849

SILCL
IEC 62061

Push-in connection

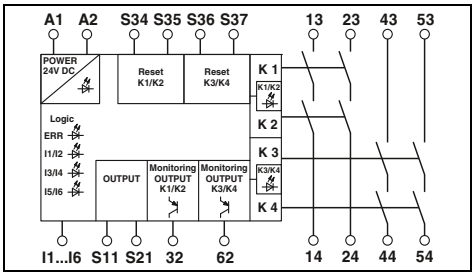

Technical data

24 V DC
0.85 ... 1.1
125 mA (with actuated relays) /
55 mA (two-channel 24 V/0 V + max. 200 mA control
(message outputs 32/62) with non-actuated relays)

1 s (availability time after activation of sensor circuit: 100ms)

4 enabling current paths
2 semiconductor alarm outputs
AgCuNi, +0.2 -0.4 µm Au
250 V AC/DC / 10 V AC/DC
6 A (N/O contact), max. 100 mA (alarm output (24 V DC))

6 A / 10 mA
5 A (0.1 Hz; DC13; 24 V)
3 A (AC15; 230 V)
6 A gL/gG NEOZED (N/O contact)
4 A gL/gG NEOZED (for low-demand applications)

-20°C ... 45°C (see derating curve)
DIN EN 50178/VDE 0160
4 kV/basic insulation (safe isolation, reinforced insulation and 6 kV between input circuit, enabling current paths and safety circuit 1 (13/14, 23/24) and safety circuit 2 (43/44, 53/54).)

22.5 mm / 106.4 mm / 114.5 mm
Class A product, see page 527

Ordering data

Type	Order No.	Pcs./Pkt.
PSR-PIP-24DC/MXF1/4X1/2X2/B	2903253	1
PSR-PIP-24DC/MXF2/4X1/2X2/B	2903256	1
PSR-PIP-24DC/MXF3/4X1/2X2/B	2903259	1
PSR-PIP-24DC/MXF4/4X1/2X2/B	2903262	1

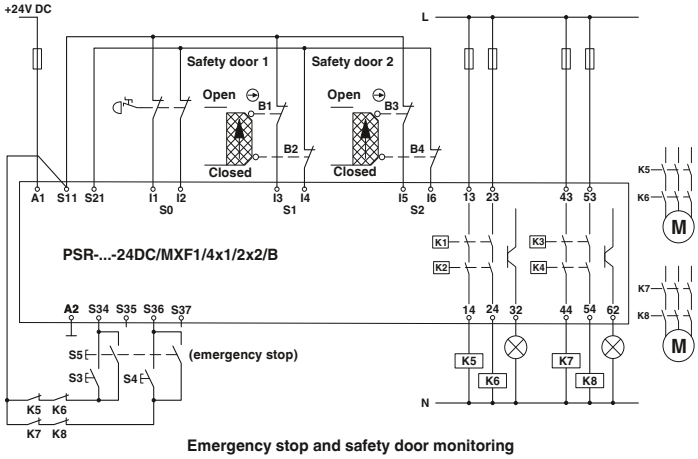

Emergency stop and safety door monitoring

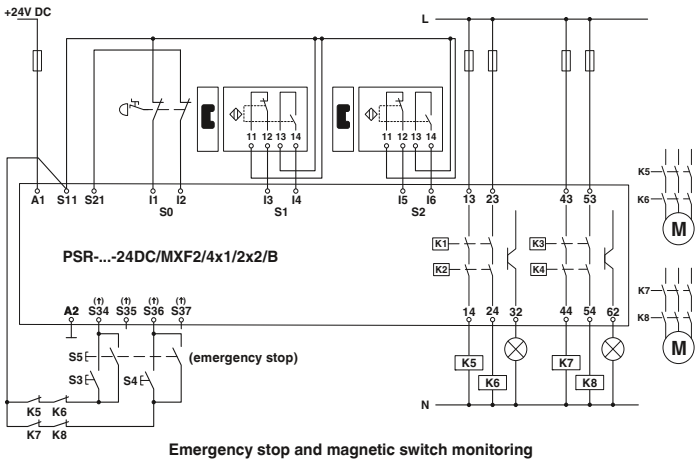

Emergency stop and magnetic switch monitoring

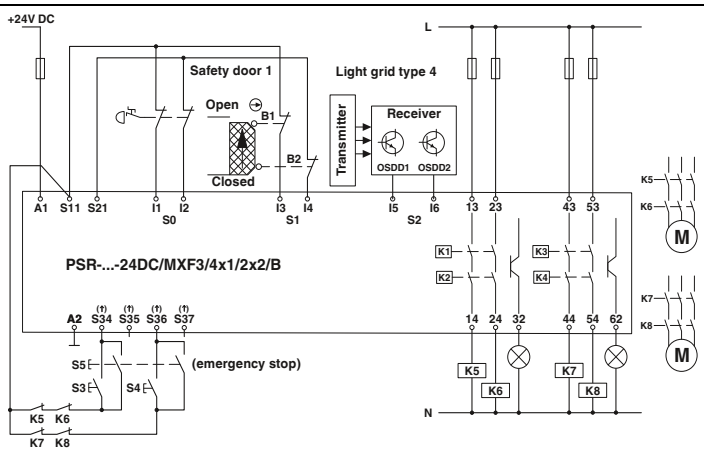

Emergency stop, safety door, and light grid monitoring

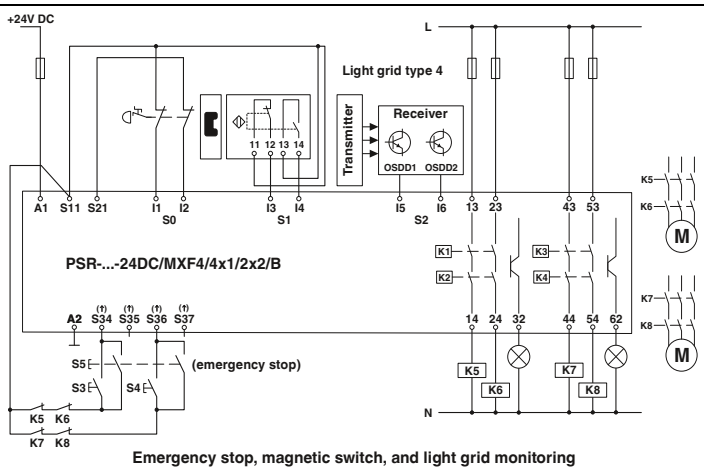

Emergency stop, magnetic switch, and light grid monitoring

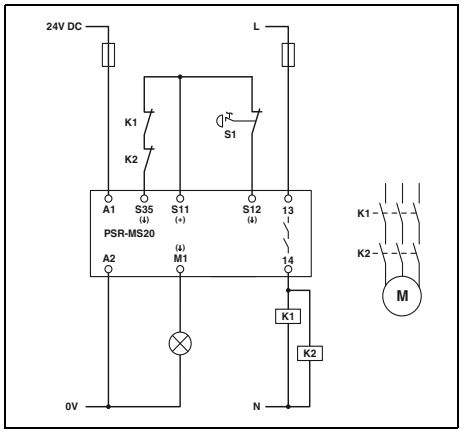

PSR-MS20
– Single-channel emergency stop monitoring with automatic start

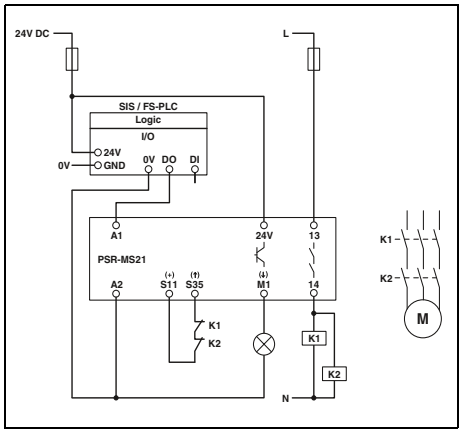

PSR-MS21
– Single-channel control via failsafe PLC

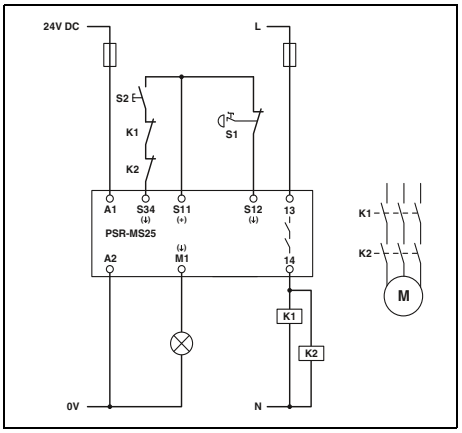

PSR-MS25
– Single-channel emergency stop monitoring with manual, monitored start

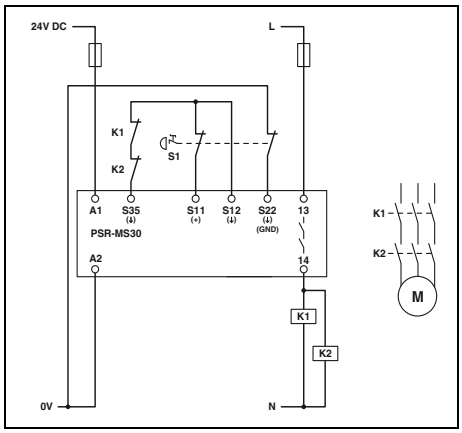

PSR-MS30
– Two-channel emergency stop monitoring with automatic start

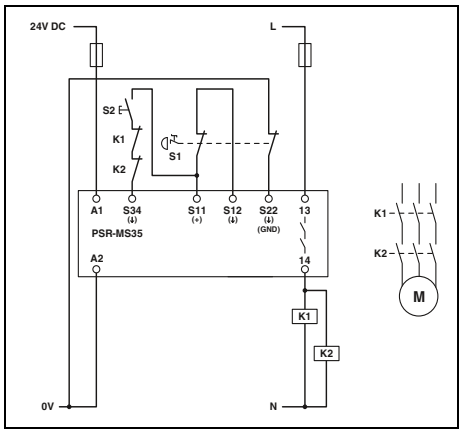

PSR-MS35
– Two-channel emergency stop monitoring with manual, monitored start

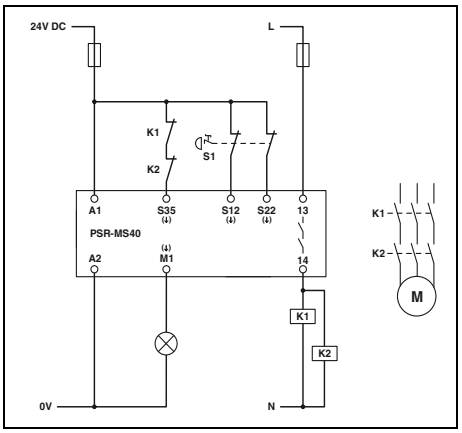

PSR-MS40
– Two-channel emergency stop monitoring with automatic start (no cross-circuit detection in the sensor circuit)

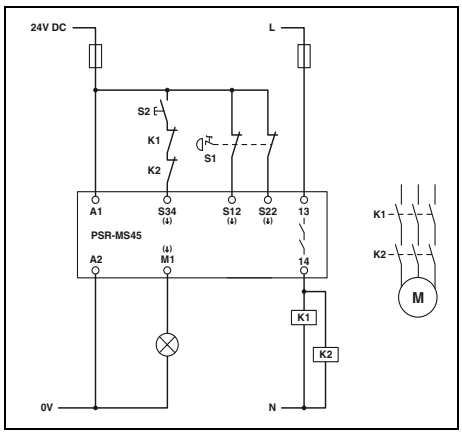

PSR-MS45
– Two-channel emergency stop monitoring with automatic start (no cross-circuit detection in the sensor circuit)

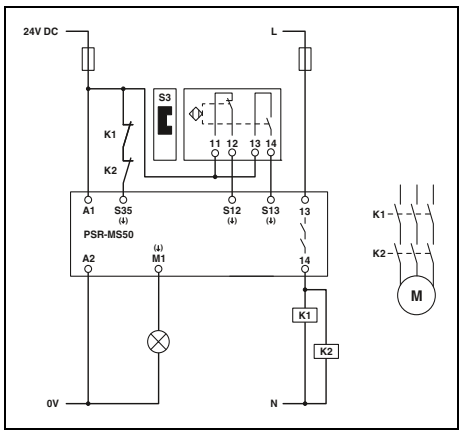

PSR-MS50
– Two-channel, non-equivalent magnetic switch monitoring with automatic start

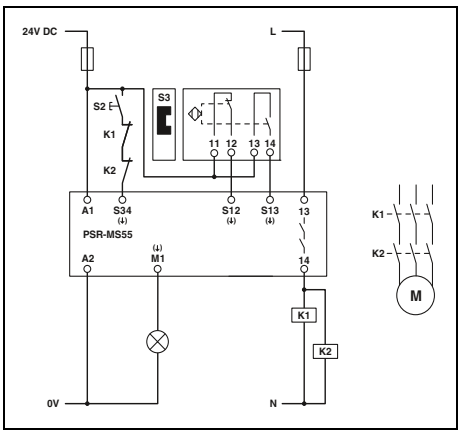

PSR-MS55
– Two-channel, non-equivalent magnetic switch monitoring with manual, monitored start

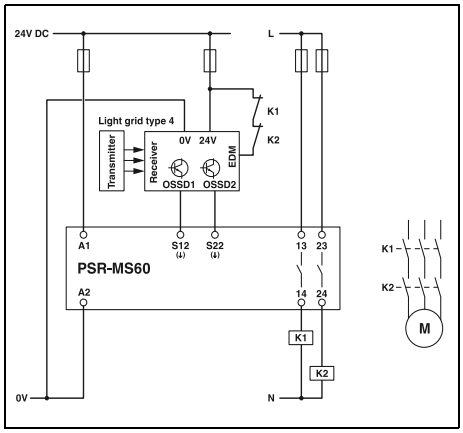

PSR-MS60
– Two-channel light grid monitoring with automatic start

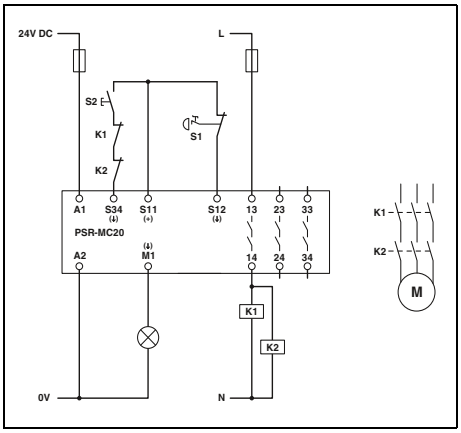

PSR-MC20
– Single-channel emergency stop monitoring with manual, monitored start

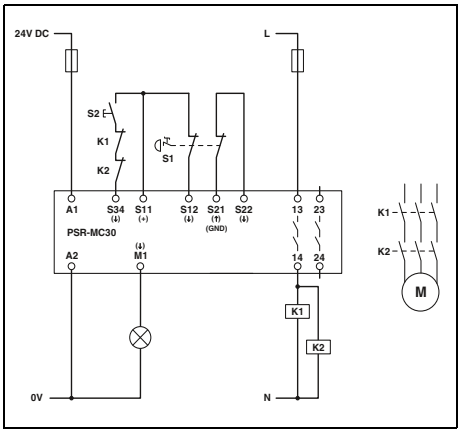

PSR-MC30
– Two-channel emergency stop monitoring with manual, monitored start; cross-circuit detection

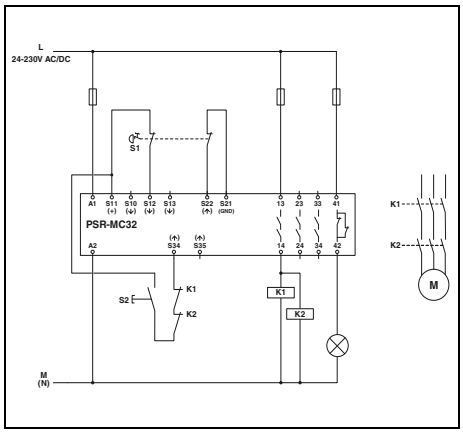

PSR-MC32
– Two-channel emergency stop monitoring with manual, monitored start

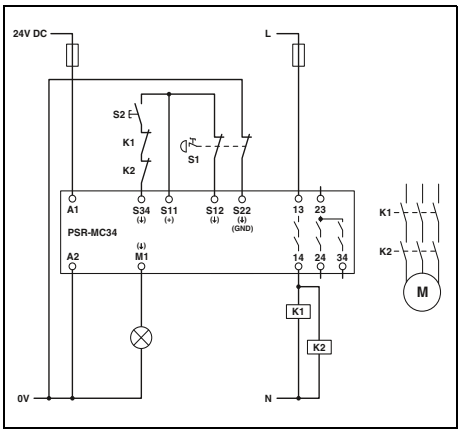

PSR-MC34
– Two-channel emergency stop monitoring with manual, monitored start; cross-circuit detection

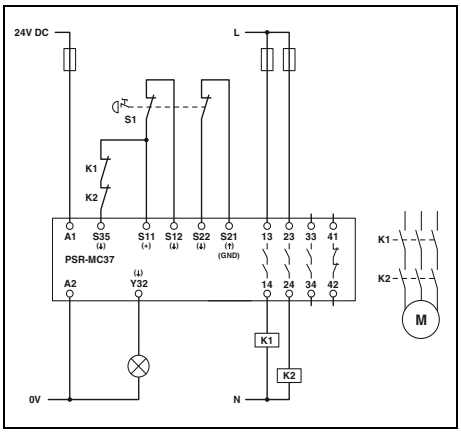

PSR-MC37
– Two-channel emergency stop monitoring with automatic start

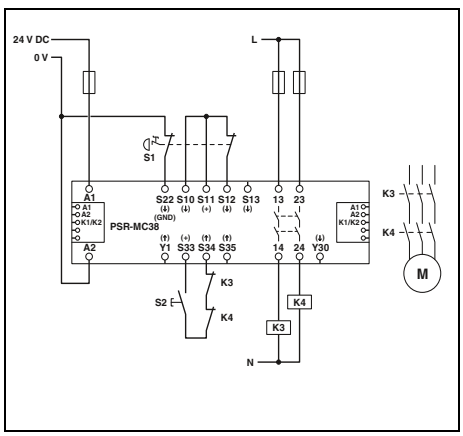

PSR-MC38
– Two-channel emergency stop monitoring with manual, monitored start

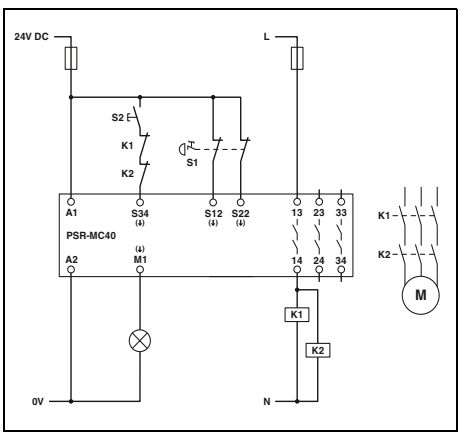

PSR-MC40
– Two-channel emergency stop monitoring with manual, monitored start (no cross-circuit detection in the sensor circuit)

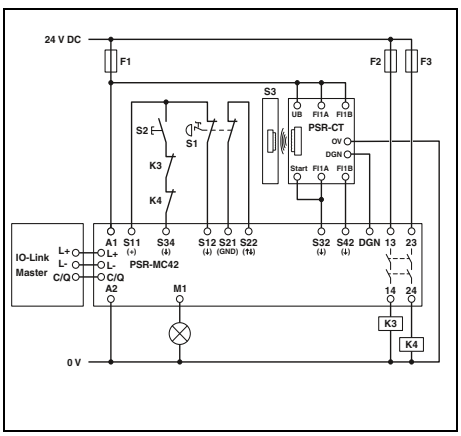

PSR-MC42
– Two-channel transponder monitoring with diagnostics via IO-Link

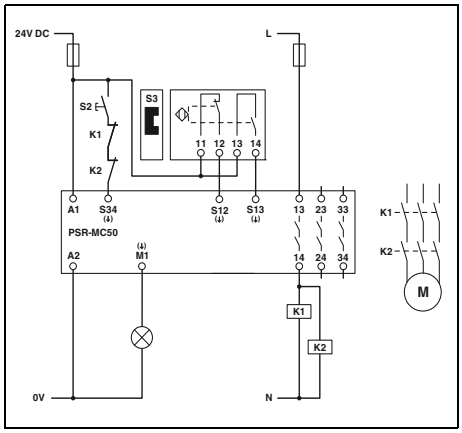

PSR-MC50
– Two-channel, non-equivalent magnetic switch monitoring with manual, monitored start

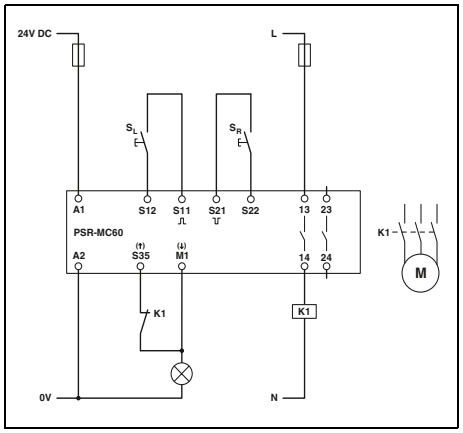

PSR-MC60
– Two-hand monitoring type IIIA

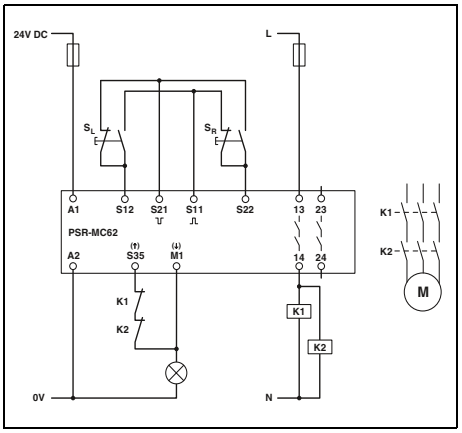

PSR-MC62
– Two-hand monitoring type IIIC

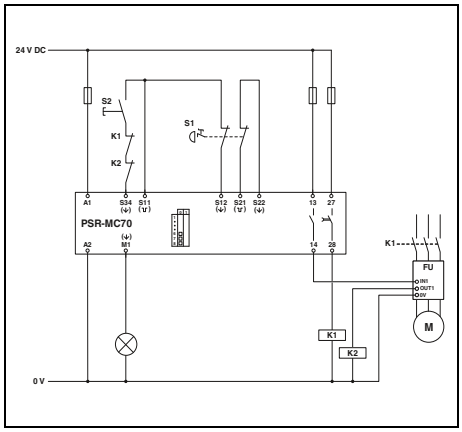

PSR-MC70
– Single-channel emergency stop monitoring with manual, monitored start

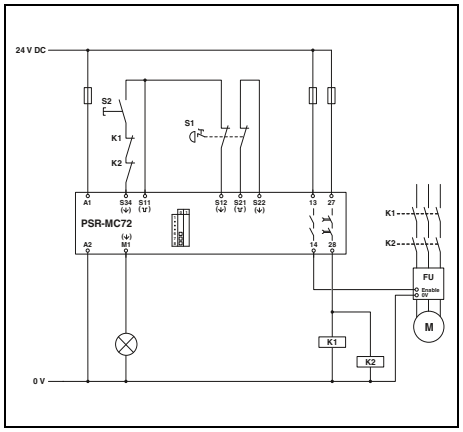

PSR-MC72
– Two-channel emergency stop monitoring with manual, monitored start

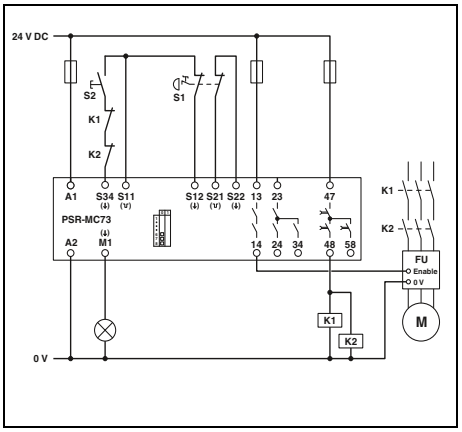

PSR-MC73
– Two-channel emergency stop monitoring with manual, monitored start

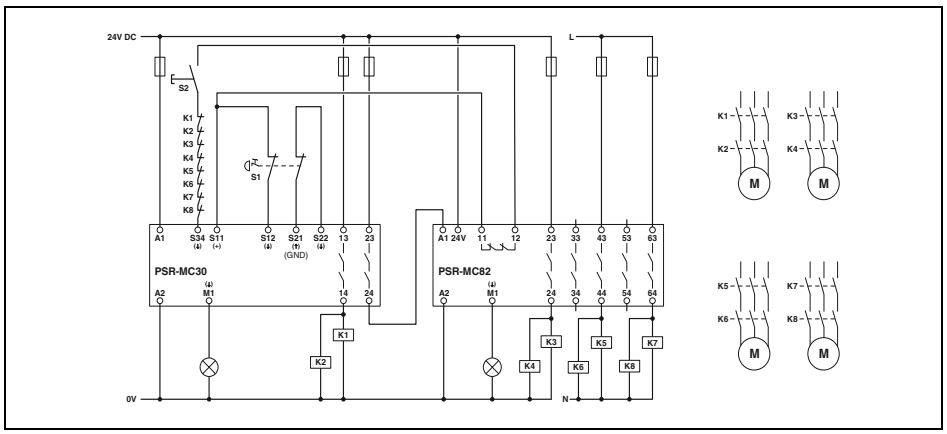

PSR-MC82
– Two-channel emergency stop monitoring with contact extension

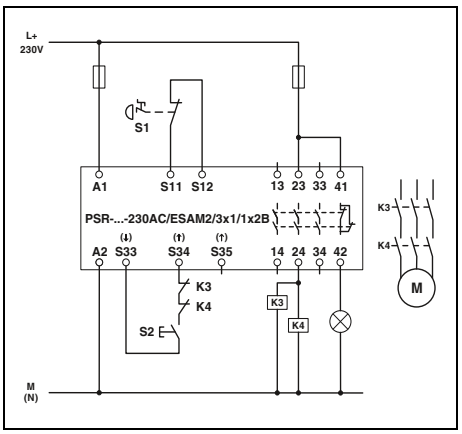

PSR-ESAM2/3X1-B
– Single-channel emergency stop monitoring with manual, monitored start
– Automatic activation: bridge at S33/S35

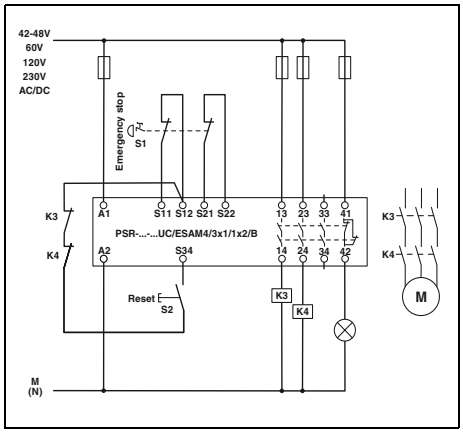

PSR-ESAM4/3X1-B
– Two-channel emergency stop monitoring with manual, monitored start; cross-circuit detection
– Automatic activation: bridge at S22/S34

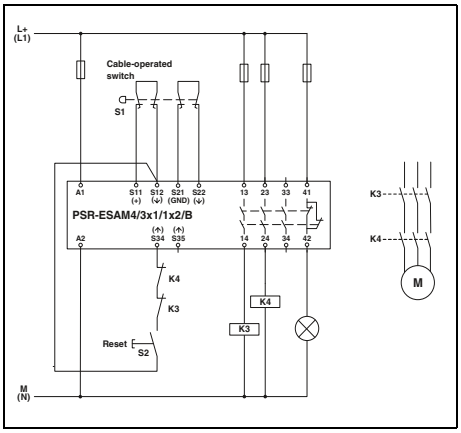

PSR-ESAM4/3X1-B
– Two-channel monitoring of a cable-operated switch with manual, monitored start; cross-circuit detection
– Automatic activation: bridge at S12/S35

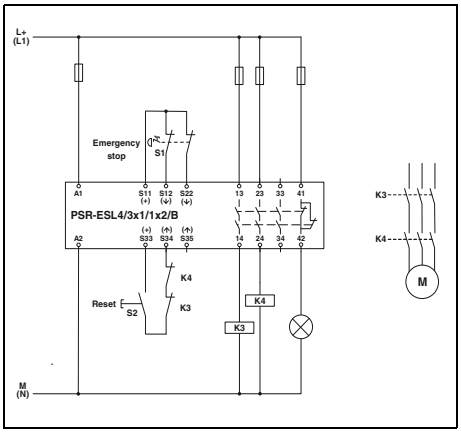

PSR-ESL4
– Two-channel emergency stop monitoring with manual, monitored start; cross-circuit detection
– Automatic activation: bridge at S33/S35

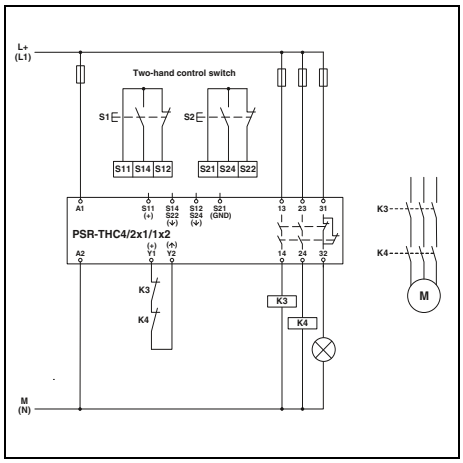

PSR-THC4
– Two-hand monitoring type IIIC

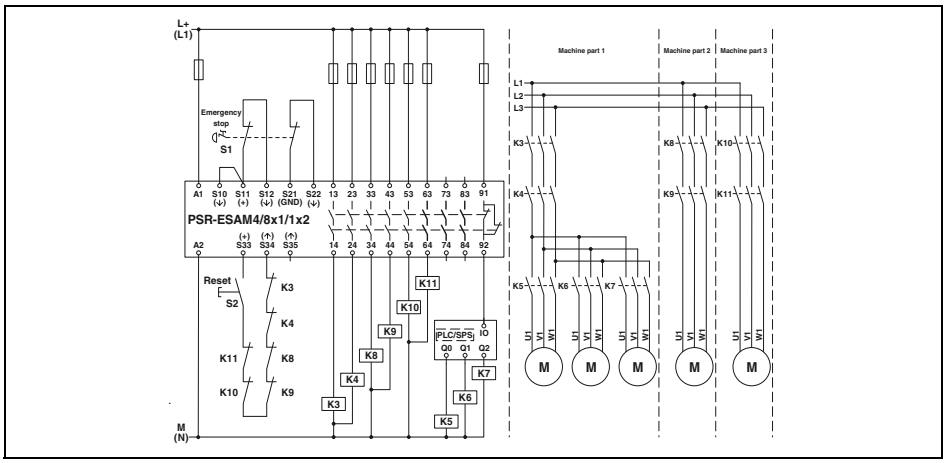

PSR-ESAM4/8X1
– Two-channel emergency stop monitoring with manual, monitored start; cross-circuit detection
– Automatic activation: bridge at S33/S35

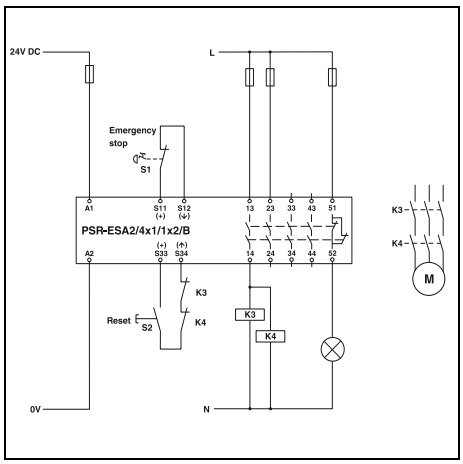

PSR-ESA2-B
– Single-channel emergency stop monitoring with manual start
– Automatic activation: bridge at S33/S34

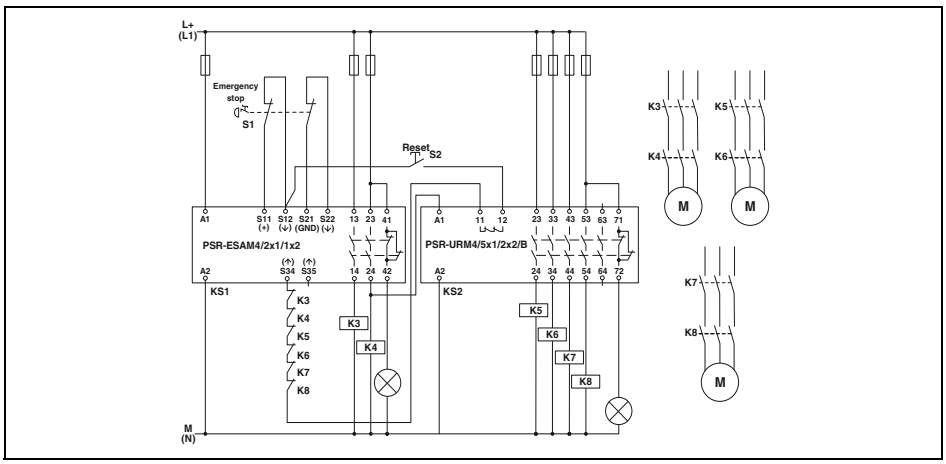

PSR-URM4 and PSR-URM4-B
– Two-channel emergency stop monitoring with manual, monitored start
– Linking with PSR-ESAM4/2X1
– Integration of the confirmation current path in the basic device

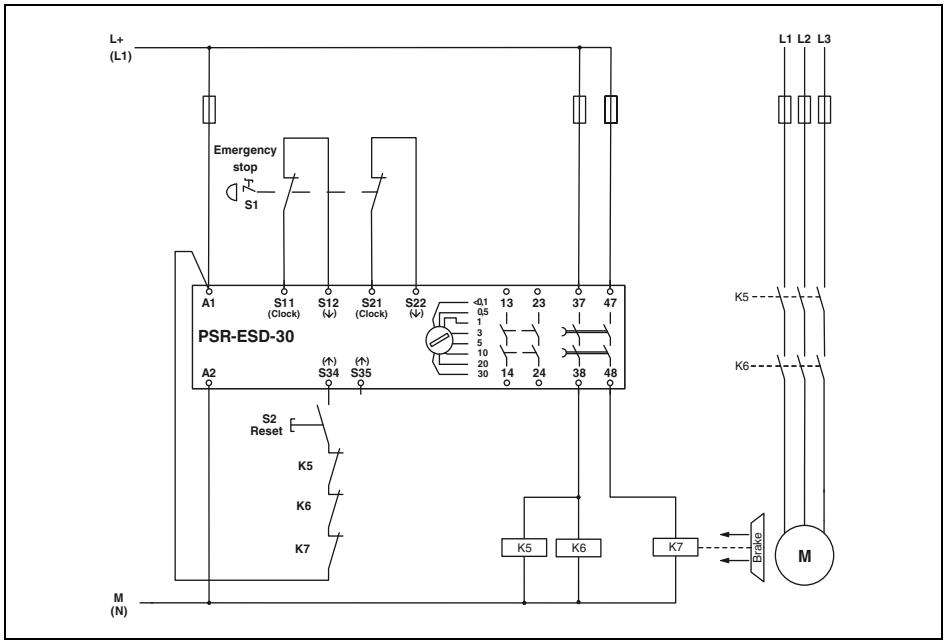

PSR-ESD-30

– Two-channel emergency stop monitoring with manual, monitored start; cross-circuit detection

– Automatic activation: bridge at A1/S35

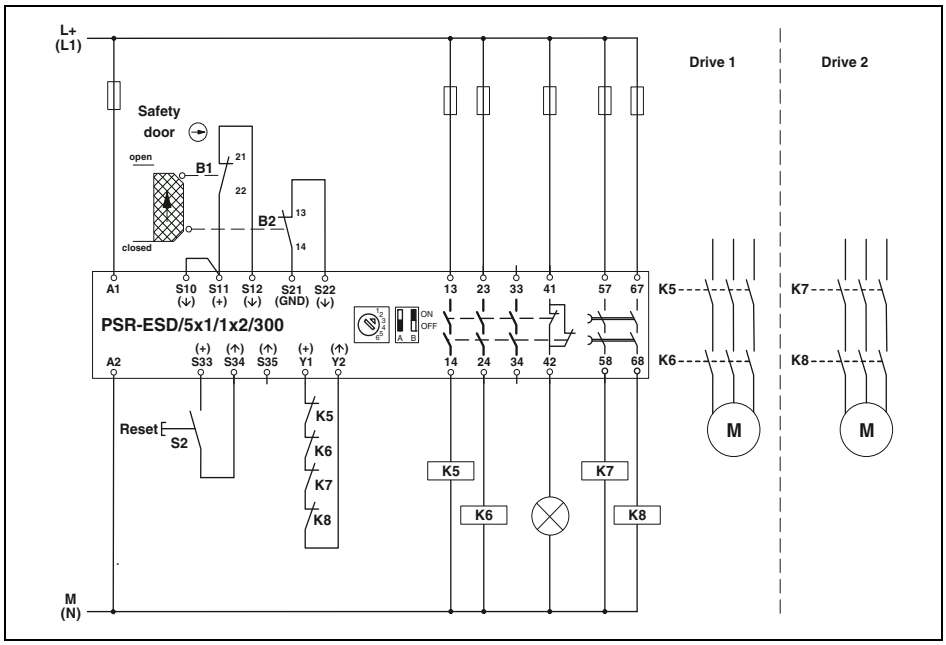

PSR-ESD-300

– Two-channel safety door monitoring with manual, monitored start; cross-circuit detection

– Automatic activation: bridge at S33/S35

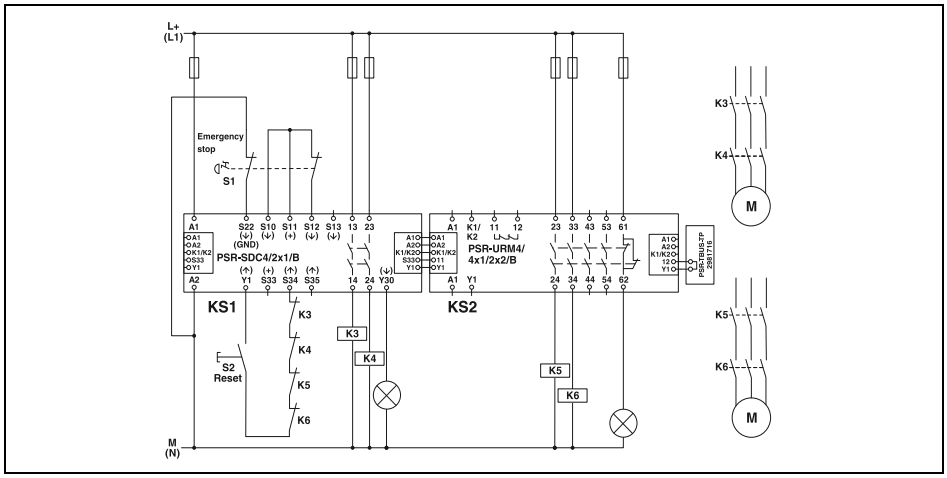

PSR-SDC4 with PSR-URM4-B
– Two-channel emergency stop monitoring with manual, monitored start
– Contact extension via PSR-TBUS
– Automatic activation: bridge at S33/S35

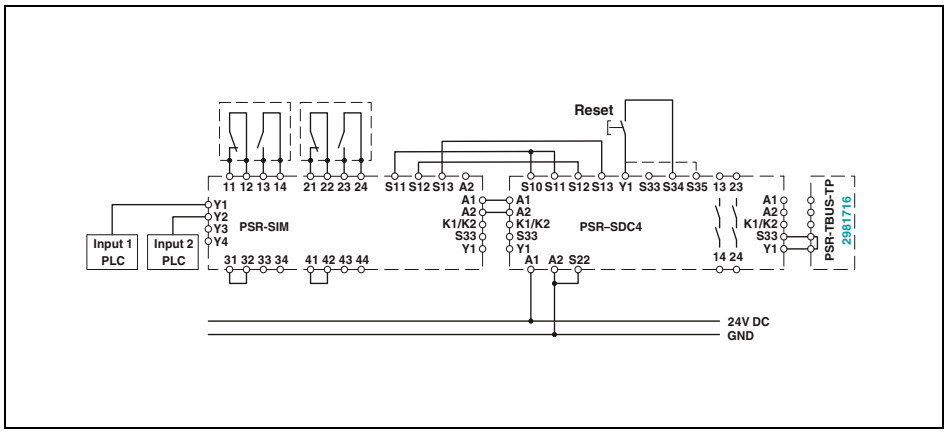

PSR-SIM4 with PSR-SDC4
– Safety door monitoring with manual, monitored start
– Contact extension via interface module
– Automatic activation: bridge at S33/S35

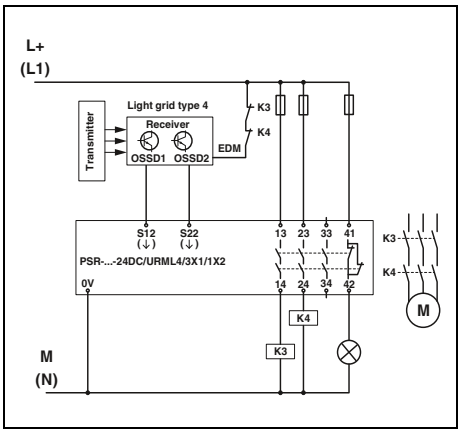

PSR-URML4
– Two-channel light grid monitoring
– Cross-circuit detection via light grid

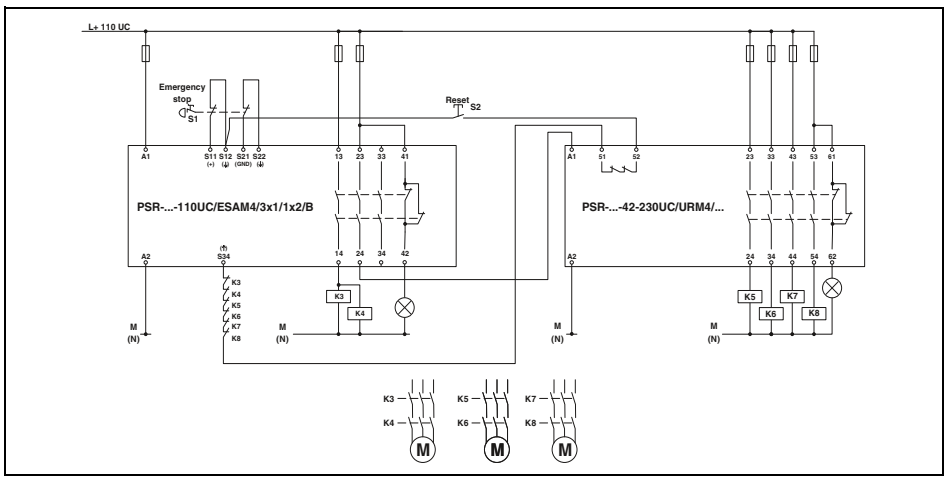

PSR-URM4/42-230UC and PSR-ESAM4/3X1-B
– Two-channel emergency stop monitoring with manual, monitored start
– Linking with PSR-ESAM4/3X1-B
– Integration of the confirmation current path in the basic device

Zero-speed and over-speed safety relays

PSR-MM25 sensorless zero-speed safety relay

PSR-MM30 zero-speed and over-speed safety relay

PSR-MM25 sensorless zero-speed safety relay

The highly compact PSR-MM25 safety relay module monitors the zero speed of single and three-phase AC and DC motors without additional sensor technology.

The residual voltage induced by the motor windings is analyzed in order to detect zero speed.

PSR-MM30 zero-speed and over-speed safety relay

With the PSR-MM30 combined zero-speed and over-speed safety relay, you can monitor up to three different operating modes in addition to zero-speed mode. You can connect an encoder or proximity switch to the safety relay module in order to monitor motion. The PSR-MM30 ensures high system availability, thanks to the reliable measuring procedure.

The integrated safety door monitoring system makes it compatible with PSRswitch non-contact safety switches.

PSRmotion software

The PSR-MM30 zero-speed and over-speed safety relay can be started up, configured, and monitored conveniently using the PSRmotion software.

In live measuring mode, you can visualize the motion sequences of your machine. You can download the Windows-based software free of charge. Adaptations are made via a USB interface.

Your web code: #1546

Note:

Pre-assembled cable adapters are available for connecting the PSR-MM30 safe zero-speed and over-speed safety relay to the motor feedback system of the controller.

Live monitoring with the PSRmotion software

Zero-speed monitoring

new

PSR-MM25: sensorless zero-speed monitoring

- Two-channel evaluation of the residual voltage induced in the motor windings
- Adjustable switching threshold and time delay
- 1 enabling current path, 2 signal outputs
- Up to Cat. 3/PL e in accordance with EN ISO 13849-1, SILCL 3 in accordance with IEC 62061

PSR-MM30: over-speed and zero-speed monitoring

- Startup via USB connection
- 2 enabling current paths, 2 signal outputs
- Monitoring of zero speed and up to 3 different operating modes
- Up to Cat. 4/PL e in accordance with EN ISO 13849-1, SILCL 3 in accordance with IEC 62061

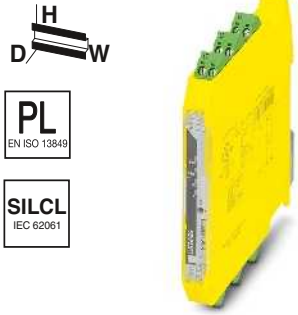

Sensorless zero-speed monitoring of AC or DC motors

Zero-speed and over-speed safety relay for connecting external sensors

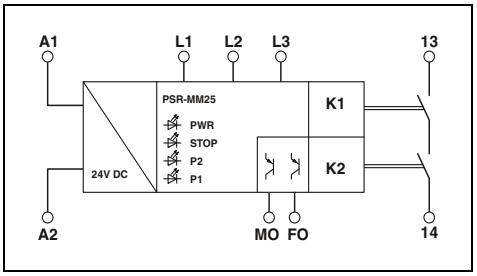

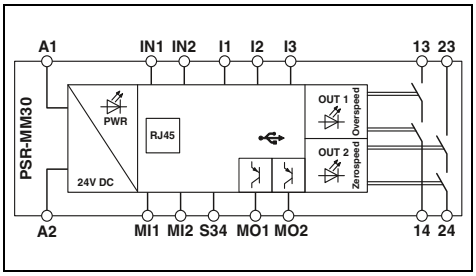

	Technical data	Technical data
Input data		
Rated control supply voltage U_S	24 V DC -15% / +10%	24 V DC -15% / +10% (provide external protection)
Rated control supply current I_S	typ. 50 mA	typ. 74 mA
Typical starting time with U_s	< 1 s	
Output data		
Contact type	1 enabling current path	2 enabling current paths
Contact material	$AgSnO_2$	$AgSnO_2$
Switching voltage	min. 24 V AC/DC / max. 250 V AC/DC (observe the load curve)	min. 12 V AC/DC / max. 250 V AC/DC (observe the load curve)
Limiting continuous current	5 A (observe derating)	6 A
Inrush current	min. 3 mA / max. 5 A	min. 3 mA, max. 6 A
Switching capacity	min. 72 mW	min. 60 mW
Short-circuit protection of the output circuits	5 A gL/gG	6 A gL/gG
General data		
Ambient temperature range	-20°C ... 55°C (observe derating)	-40°C ... 55°C (observe derating)
Air and creepage distances between the circuits	DIN EN 50178	DIN EN 50178, EN 60947-5-1
Rated surge voltage/insulation	Basic insulation 4 kV: between all current paths and housing Basic insulation 8 kV: between L1 and L2 between L1 and L3 between L2 and L3 Safe isolation, reinforced insulation 6 kV: between A1/A2 and 13/14 between MO/FO and 13/14 Safe isolation, reinforced insulation 8 kV: between L1/L2/L3 and A1/A2 between L1/L2/L3 and MO/FO between L1/L2/L3 and 13/14	Basic insulation 4 kV between all current paths and housing Safe isolation, reinforced insulation 6 kV between input circuit (A1/A2, I1, I2, I3, MI1, MI2, IN1, IN2, S34, MO1, MO2, RJ45, USB) and the enabling current paths (13/14, 23/24)
Screw connection rigid / flexible / AWG	0.2 - 2.5 mm^2 / 0.2 - 2.5 mm^2 / 24 - 12	0.2 - 2.5 mm^2 / 0.2 - 2.5 mm^2 / 24 - 12
Spring-cage connection rigid / flexible / AWG	0.2 - 1.5 mm^2 / 0.2 - 1.5 mm^2 / 24 - 16	0.2 - 1.5 mm^2 / 0.2 - 1.5 mm^2 / 24 - 16
Dimensions W / H / D — Screw version	12.5 mm / 112.2 mm / 114.5 mm	22.5 mm / 112.2 mm / 114.5 mm
Dimensions W / H / D — Spring-cage version	12.5 mm / 116.6 mm / 114.5 mm	22.5 mm / 117.5 mm / 114.5 mm
EMC note	Class A product, see page 527	Class A product, see page 527

Ordering data

Description	Type	Order No.	Pcs./Pkt.
Zero-speed safety relay, sensorless			
with screw connection	**PSR-MM25-1NO-2DO-24DC-SC**	2702355	1
with spring-cage connection	**PSR-MM25-1NO-2DO-24DC-SP**	2702356	1
Zero-speed and over-speed safety relay			
with screw connection	**PSR-MM30-2NO-2DO-24DC-SC**	2702357	1
with spring-cage connection	**PSR-MM30-2NO-2DO-24DC-SP**	2702358	1

Zero-speed and over-speed safety relays

- Monitors up to three different speeds plus zero speed
- Option to connect encoders (TTL, HTL, SIN/COS) and proximity switches
- Can be parameterized using free PSR-CONF-WIN configuration software
- Up to Cat. 4/PL e in accordance with EN ISO 13849-1, SILCL 3 in accordance with IEC 62061

Notes:

Pre-assembled cable adapters are available for connecting the PSR-RSM4 safe zero-speed and over-speed safety relay to the motor feedback system (of the controller) – Order No. on request.

The necessary PSR-CONF-WIN configuration software can be downloaded free of charge from phoenixcontact.com.

PL
EN ISO 13849

SILCL
IEC 62061

Zero-speed and over-speed safety relay for connecting external sensors

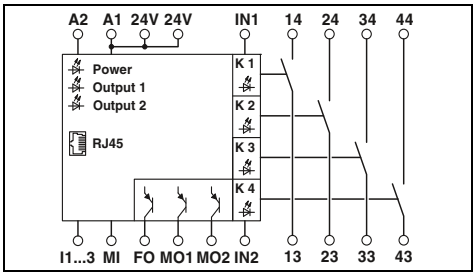

Technical data

Input data	
Nominal input voltage U_N	24 V DC
Permissible range (with reference to U_N)	0.85 ... 1.1
Typical current consumption (with reference to U_N)	100 mA
Typical response time	15 ms
Typical release time	12 ms
Recovery time	1 s
Output data	
Contact type	4 enabling current paths
Contact material	AgNi10, + 5 µm Au
Max./min. switching voltage	250 V AC/DC / 100 mV AC/DC
Limiting continuous current	5 A, 100 mA (alarm outputs)
Max./min. inrush current	6 A / 1 mA
Min. switching power	1 mW
Switching capacity (3600/h cycles)	2 A (24 V (DC13)) ; 3 A (230 V (AC15))
Short-circuit protection of the output circuits	6 A gL
General data	
Ambient temperature range	-20°C ... 55°C
Air and creepage distances between the circuits	EN 60664/VDE 0110
Rated surge voltage/insulation	4 kV/basic insulation, (safe isolation, reinforced insulation and 6 kV between input circuit and enabling current paths.)
Screw connection rigid / flexible / AWG	0.2 - 2.5 mm^2 / 0.2 - 2.5 mm^2 / 24 - 12
Spring-cage connection rigid / flexible / AWG	0.2 - 1.5 mm^2 / 0.2 - 1.5 mm^2 / 24 - 16
Dimensions W / H / D — Screw version	45 mm / 99 mm / 114.5 mm
Dimensions W / H / D — Spring-cage version	45 mm / 112 mm / 114.5 mm
EMC note	Class A product, see page 527

Ordering data

Description	Type	Order No.	Pcs./Pkt.
Zero-speed and over-speed safety relay, 2-channel, automatic control with cable adapter or two initiators, activation: manual and automatic			
with screw connection	**PSR-SCP- 24DC/RSM4/4X1**	2981538	1
with spring-cage connection	**PSR-SPP- 24DC/RSM4/4X1**	2981541	1

Accessories

Cable adapter for PSR-RSM4, cable length: 2.5 m, for controller:			
Lenze	**CABLE- 9/8/250/RSM/LENZE**	2981826	1
Siemens Heidenhain, 15/8-pos.	**CABLE-15/8/250/RSM/SIMO611D**	2981606	1
Siemens Heidenhain, 25/8-pos.	**CABLE-25/8/250/RSM/SIMO611D**	2981583	1
Further types on request			
Configuration software for parameterizing the PSR-RSM4 safe zero-speed and over-speed safety relay, with programming cable	**PSR-CONF-WIN1.0**	2981554	1

Safe coupling relays for universal applications

- Single- or two-channel control
- Forcibly guided contacts in accordance with EN 50205
- Up to Cat. 1/PL c in accordance with EN ISO 13849-1, SILCL 1 in accordance with IEC 62061

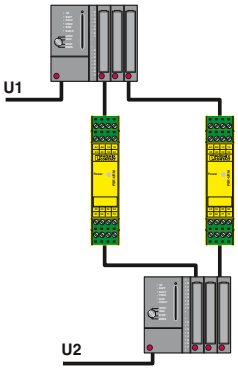

Reliable signal exchange between two systems with confirmation function.

PL EN ISO 13849

SIL IEC 61508

5 N/O contacts, 2 N/C contacts, for U_S = 24 V AC/DC or 120 V AC/DC

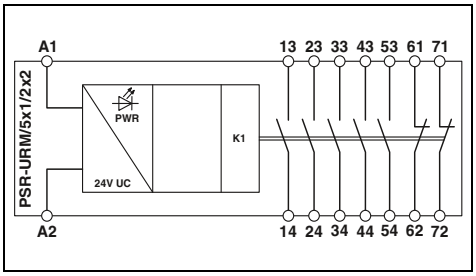

Technical data

Input data		
Rated control supply voltage U_S	24 V AC/DC -15% / +10%	120 V AC/DC -20% ... +10%
Rated control supply current I_S	typ. 47 mA	typ. 11 mA
Typical starting time with U_s	typ. 20 ms (when controlled via A1)	typ. 20 ms (when controlled via A1)
Typical release time	typ. 20 ms (when controlled via A1)	typ. 20 ms (when controlled via A1)
Output data		
Contact type	5 enabling current paths 2 confirmation current paths	
Contact material	$AgSnO_2$	
Max./min. switching voltage	230 V AC/DC / 5 V AC/DC	
Limiting continuous current	6 A (N/O contact), 3 A (N/C contact)	
Max./min. inrush current	6 A / 10 mA	
Switching capacity (360/h cycles)	4 A (24 V (DC13)) ; 4 A (250 V (AC15))	
General data		
Ambient temperature range	-20°C ... 55°C	
Air and creepage distances between the circuits	DIN EN 50178	
Rated surge voltage/insulation	Safe isolation 4 kV between all current paths and housing	
Screw connection rigid / flexible / AWG	0.2 - 2.5 mm^2 / 0.2 - 2.5 mm^2 / 24 - 12	
Spring-cage connection rigid / flexible / AWG	0.2 - 1.5 mm^2 / 0.2 - 1.5 mm^2 / 24 - 16	
Dimensions W / H / D — Screw version	22.5 mm / 114.5 mm / 99 mm	
Dimensions W / H / D — Spring-cage version	22.5 mm / 114.5 mm / 112 mm	
EMC note	Class A product, see page 527	

Ordering data

Description	Type	Order No.	Pcs./Pkt.
Coupling relay, with forcibly guided contacts			
with screw connection for 24 V AC/DC	**PSR-SCP- 24UC/URM/5X1/2X2**	2963747	1
with spring-cage connection for 24 V AC/DC	**PSR-SPP- 24UC/URM/5X1/2X2**	2963970	1
Coupling relay, with forcibly guided contacts			
with screw connection for 120 V AC/DC	**PSR-SCP-120UC/URM/5X1/2X2**	2981402	1

Safe coupling relays for universal applications

- Single- or two-channel control
- Forcibly guided contacts in accordance with EN 50205
- Up to Cat. 1/PL c in accordance with EN ISO 13849-1, SILCL 1 in accordance with IEC 62061

Notes:

Marking systems and mounting material
See Catalog 3

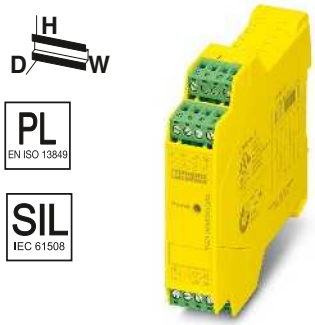

3 N/O contacts, 3 N/C contacts, for U_S = 24 V AC/DC

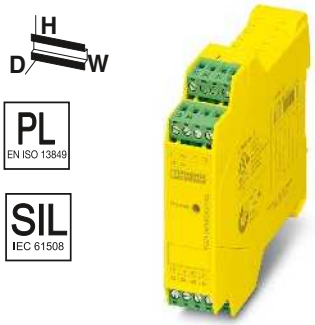

5 N/O contacts, 1 N/C contact, for U_S = 24 V AC/DC

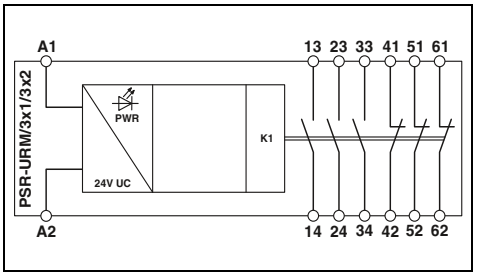

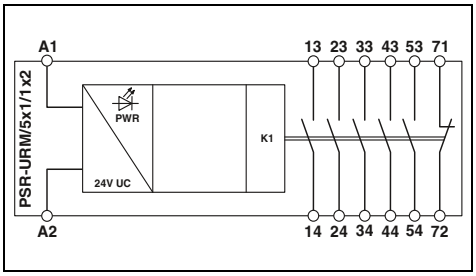

	Technical data	Technical data
Input data		
Rated control supply voltage U_S	24 V AC/DC -15% / +10%	24 V AC/DC -15% / +10%
Rated control supply current I_S	typ. 45 mA	typ. 47 mA
Typical starting time with U_s	typ. 15 ms (when controlled via A1)	typ. 20 ms (when controlled via A1)
Typical response time	-	-
Typical release time	typ. 15 ms (when controlled via A1)	typ. 20 ms (when controlled via A1)
Output data		
Contact type	3 enabling current paths 3 confirmation current paths	5 enabling current paths 1 confirmation current path
Contact material	$AgSnO_2$	$AgSnO_2$
Max./min. switching voltage	230 V AC/DC / 5 V AC/DC	230 V AC/DC / 5 V AC/DC
Limiting continuous current	6 A (N/O contact), 3 A (N/C contact)	6 A (N/O contact), 6 A (N/C contact)
Max./min. inrush current	8 A / 10 mA	6 A / 10 mA
General data		
Ambient temperature range	-20°C ... 55°C	-20°C ... 55°C
Air and creepage distances between the circuits	DIN EN 50178	DIN EN 50178
Rated surge voltage/insulation	4 kV/basic insulation, (safe isolation, reinforced insulation, and 6 kV between input circuit and enabling current paths.)	4 kV/basic insulation (safe isolation, reinforced insulation, and 6 kV between A1/A2, 53/54, 71/72 and 13/14, 23/24, 33/34, 43/44.)
Screw connection rigid / flexible / AWG	0.2 - 2.5 mm^2 / 0.2 - 2.5 mm^2 / 24 - 12	0.2 - 2.5 mm^2 / 0.2 - 2.5 mm^2 / 24 - 12
Spring-cage connection rigid / flexible / AWG	0.2 - 1.5 mm^2 / 0.2 - 1.5 mm^2 / 24 - 16	0.2 - 1.5 mm^2 / 0.2 - 1.5 mm^2 / 24 - 16
Dimensions W / H / D — Screw version	22.5 mm / 114.5 mm / 99 mm	22.5 mm / 114.5 mm / 99 mm
Dimensions W / H / D — Spring-cage version	22.5 mm / 114.5 mm / 112 mm	22.5 mm / 114.5 mm / 112 mm
EMC note	Class A product, see page 527	Class A product, see page 527

Description	Ordering data: Type	Order No.	Pcs./Pkt.	Ordering data: Type	Order No.	Pcs./Pkt.
Coupling relay, with forcibly guided contacts						
with screw connection	**PSR-SCP- 24UC/URM/3X1/3X2**	2981839	1	**PSR-SCP- 24UC/URM/5X1/1X2**	2981952	1
with spring-cage connection	**PSR-SPP- 24UC/URM/3X1/3X2**	2981842	1	**PSR-SPP- 24UC/URM/5X1/1X2**	2981965	1
Universal safety relay, with forcibly guided contacts						
with screw connection for120 V AC/DC						
Relay, with forcibly guided contacts						

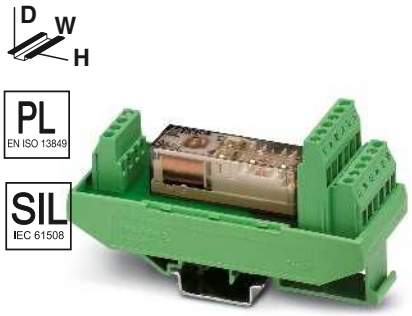

4 N/O contacts, 2 N/C contacts, for U_S = 24 V AC/DC

2 PDTs, for U_S = 24 V AC/DC or 120 V AC/DC

2 PDTs, for U_S = 24 V DC

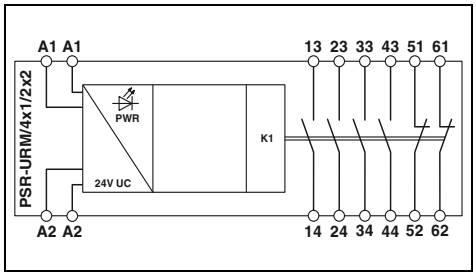

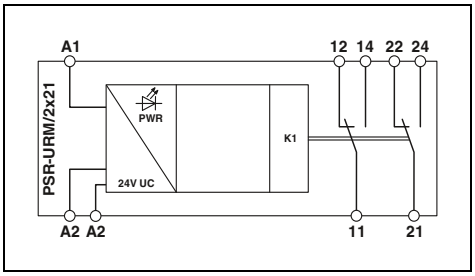

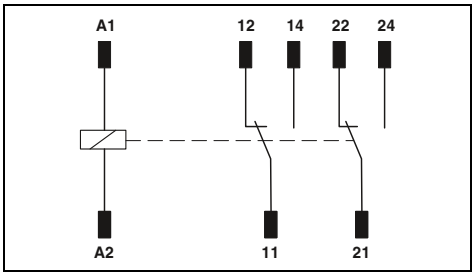

Technical data

24 V AC/DC -20% / +10%	
typ. 52 mA	
typ. 10 ms (when controlled via A1)	
-	
typ. 10 ms (when controlled via A1)	
4 enabling current paths	
2 confirmation current paths	
$AgSnO_2$	
230 V AC/DC / 5 V AC/DC	
6 A / 10 mA	
-20°C ... 55°C	
DIN EN 50178	
Safe isolation, reinforced insulation 6 kV between input circuit (A1/A2) and all output current paths	
Basic insulation 4 kV between all output current paths	
0.2 - 2.5 mm² / 0.2 - 2.5 mm² / 24 - 12	
0.2 - 1.5 mm² / 0.2 - 1.5 mm² / 24 - 16	
40 mm / 111 mm / 55 mm	
40 mm / 114.5 mm / 50.1 mm	
Class A product, see page 527	

Ordering data

Type	Order No.	Pcs./Pkt.
PSR-SCF- 24UC/URM/4X1/2X2	2981444	1
PSR-SPF-24UC/URM/4X1/2X2	2981457	1

Technical data

24 V AC/DC -15% / +10%	120 V AC/DC -15% / +10%
typ. 30 mA	typ. 9 mA
typ. 10 ms	typ. 10 ms
-	-
typ. 10 ms	typ. 10 ms
2 PDT	
AgNi	
230 V AC/DC / 5 V AC/DC	
5 A (N/O contact), 3.5 A (N/C contact)	
6 A / 10 mA	
-20°C ... 50°C	
DIN EN 50178	
4 kV/basic insulation (safe isolation, reinforced insulation, and 6 kV between logic and signaling current paths).	
0.2 - 2.5 mm² / 0.2 - 2.5 mm² / 24 - 12	
-	
17.5 mm / 75 mm / 60.5 mm	
-	
Class A product, see page 527	

Ordering data

Type	Order No.	Pcs./Pkt.
PSR-SCF- 24UC/URM/2X21	2981363	10
PSR-SCF-120UC/URM/2X21	2981376	10

Technical data

24 V DC -15% / +10%
typ. 29 mA
-
10 ms
4 ms
2 PDT
AgNi
250 V AC/DC / 15 V
6 A (N/O contact), 6 A (N/C contact)
6 A / 10 mA
-25°C ... 70°C
DIN EN 50178
-
-
-
12.6 mm / 29 mm / 25.5 mm
-

Ordering data

Type	Order No.	Pcs./Pkt.
REL-SR- 24DC/2X21	2961574	10

PSRmini highly compact safe coupling relays

PSRclassic conventional safe coupling relays

Standardized system cabling

PSRmini highly compact safe coupling relays

Thanks to the relay technology developed in-house, the PSRmini coupling relays are the narrowest coupling relays in the world for safe switch-on and switch-off.

The force-guided contacts enable quick and easy diagnostics. Thanks to visual LED diagnostics, SIL 3-qualified inspection is possible directly on the module. Furthermore, active error feedback to the controller ensures short downtimes during planned maintenance phases.

Main features:

– Overall width of 6 mm and 12 mm
– Safe diagnostics and easy proof test in accordance with IEC 61508
– Proven safety, thanks to force-guided relay contacts
– TÜV-certified
– Approvals for all global markets
– SIL 3 in accordance with IEC 61508 / IEC 61511 / EN 50156

Your web code: #0507

PSRclassic conventional safe coupling relays

In the PSRclassic series, you will find conventional coupling relays with force-guided contacts for safe switch-off.

The conventional coupling relays are characterized by a wide range of functions and versions. They are compatible with common safe systems. With a housing width starting from 17.5 mm, they correspond with market-standard housing dimensions.

Main features:

– Overall width starting from 17.5 mm
– Proven safety, thanks to force-guided relay contacts
– Safe diagnostics and easy proof test in accordance with IEC 61508
– Approvals for all global markets
– SIL 3 in accordance with IEC 61508 / IEC 61511 / EN 50156

Your web code: #1548

Standardized system cabling

The Termination Carrier from Phoenix Contact enables quick, error-free mounting and connection to common safe systems. Signal connection is established by Plug and Play using standardized system cables. Standardized or controller-specific front adapters are used for connection to your safe system.

Main features:

– Compact, for high packing density
– Robust, for high system availability
– Flexible, for optimum adaptation
– Fast, thanks to Plug and Play cabling

Highly compact, safe coupling relays for failsafe controllers

- SIL coupling relay for safety-related switch-off
- Single-channel control
- 1 enabling current path, 1 digital signal output, 1 diagnostic current path
- Easy proof test
- Active error acknowledgment via A1
- Integrated test pulse filter
- Forcibly guided contacts in accordance with EN 50205
- Up to SIL 3 in accordance with IEC 61508, IEC 61511, and IEC 50156
- Other approvals: ATEX/IECEx Zone 2, UL Class 1 Zone 2 / Class 1 Div. 2, ISA-S71.04 (G3), DNV GL (applied for)

SIL 3 in accordance with IEC 61508, 1 enabling current path, 1 diagnostic current path

SIL 2 in accordance with IEC 61508, 1 enabling current path, 1 diagnostic current path

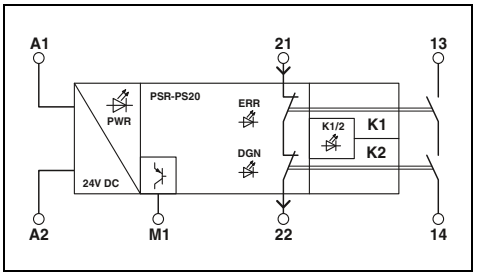

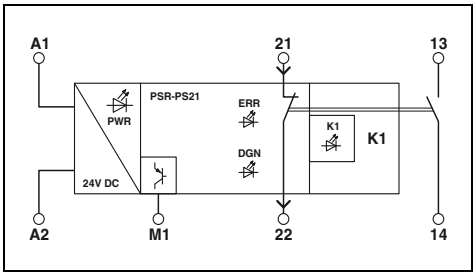

	Technical data	Technical data
Input data		
Rated control supply voltage U_S	24 V DC -15% / +10% (A1/A2)	24 V DC -15% / +10% (A1/A2)
Rated control supply current I_S	typ. 45 mA	typ. 45 mA
Typical starting time with U_s	< 100 ms (with U_s when controlled via A1)	< 100 ms (with U_s when controlled via A1)
Typical release time	< 35 ms (when controlled via A1)	< 35 ms (when controlled via A1)
Recovery time	500 ms	500 ms
Output data		
Contact type	1 enabling current path 1 confirmation current path	1 enabling current path 1 confirmation current path
Contact material	$AgSnO_2$	$AgSnO_2$
Switching voltage	min. 12 V AC/DC / max. 250 V AC/DC (observe the load curve)	min. 12 V AC/DC / max. 250 V AC/DC (observe the load curve)
Limiting continuous current	6 A (high demand), 4 A (low demand)	6 A (high demand), 4 A (low demand)
Inrush current	min. 3 mA / max. 6 A	min. 3 mA, max. 6 A
Switching capacity	min. 60 mW	min. 60 mW
Short-circuit protection of the output circuits	6 A gL/gG 4 A gL/gG (for low-demand applications)	6 A gL/gG 4 A gL/gG (for low-demand applications)
Alarm outputs		
Number of outputs	1 (non-safety-related)	1 (non-safety-related)
Output current	max. 100 mA	max. 100 mA
Short-circuit protection	no	no
Output fuse	150 mA fast blow	150 mA fast blow
General data		
Ambient temperature range	-40°C ... 70°C (observe derating)	-40°C ... 65°C (observe derating)
Air and creepage distances between the circuits	DIN EN 50178, EN 60079-15	DIN EN 50178, EN 60079-15
Rated surge voltage/insulation	Safe isolation, 6 kV reinforced insulation from control circuit, start circuit, confirmation current path, signal output to the enabling current path; 4 kV/basic insulation between all current paths and housing	Safe isolation, 6 kV reinforced insulation from control circuit, start circuit, confirmation current path, signal output to the enabling current path; 4 kV/basic insulation between all current paths and housing
Screw connection rigid / flexible / AWG	0.2 - 2.5 mm^2 / 0.2 - 2.5 mm^2 / 26 - 12	0.2 - 2.5 mm^2 / 0.2 - 2.5 mm^2 / 26 - 12
Dimensions W / H / D	6.8 mm / 93.1 mm / 102.5 mm	6.8 mm / 93.1 mm / 102.5 mm
EMC note	Class A product, see page 527	Class A product, see page 527

Description	Ordering data: Type	Order No.	Pcs./Pkt.	Ordering data: Type	Order No.	Pcs./Pkt.
Coupling relay for failsafe controllers						
	PSR-PS20-1NO-1NC-24DC-SC	2700356	1	**PSR-PS21-1NO-1NC-24DC-SC**	2700357	1

Safety relay modules for the process industry – PSRmini

Highly compact, safe coupling relays for failsafe controllers

- SIL coupling relay for safety-related switch-off
- Single- or two-channel control
- 1 enabling current path, 1 diagnostic current path
- Easy proof test
- Integrated test pulse filter
- Forcibly guided contacts in accordance with EN 50205
- Up to SIL 3 in accordance with IEC 61508, IEC 61511, and IEC 50156
- Other approvals: ATEX/IECEx Zone 2, UL Class 1 Zone 2 / Class 1 Div. 2, ISA-S71.04 (G3)

SIL 3 in accordance with IEC 61508, active error feedback via A1

SIL 3 in accordance with IEC 61508, floating diagnostic current path

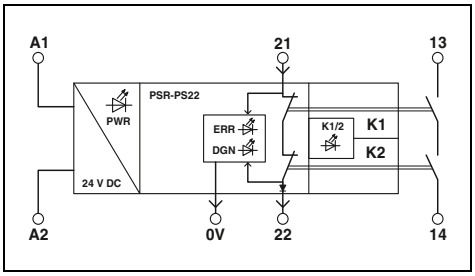

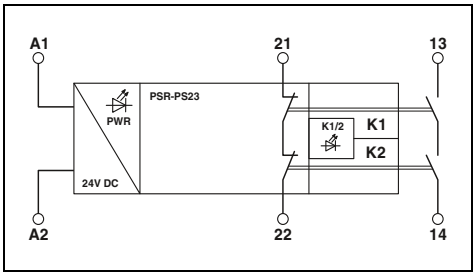

	Technical data	Technical data
Input data		
Rated control supply voltage U_S	24 V DC -15% / +10% (A1/A2)	24 V DC -20% / +25% (A1/A2)
Rated control supply current I_S	typ. 45 mA	typ. 45 mA
Typical starting time with U_s	< 150 ms (with U_s when controlled via A1)	< 70 ms (with U_s when controlled via A1)
Typical release time	< 30 ms (when controlled via A1)	< 30 ms (when controlled via A1)
Recovery time	500 ms	500 ms
Output data		
Contact type	1 enabling current path 1 confirmation current path	1 enabling current path 1 confirmation current path
Contact material	$AgSnO_2$	$AgSnO_2$
Switching voltage	min. 12 V AC/DC / max. 250 V AC/DC (observe the load curve)	min. 12 V AC/DC / max. 250 V AC/DC (observe the load curve)
Limiting continuous current	6 A (high demand), 4 A (low demand)	6 A (high demand), 4 A (low demand)
Inrush current	min. 3 mA / max. 6 A	min. 3 mA, max. 6 A
Switching capacity	min. 60 mW	min. 60 mW
Short-circuit protection of the output circuits	6 A gL/gG 4 A gL/gG (for low-demand applications)	6 A gL/gG 4 A gL/gG (for low-demand applications)
General data		
Ambient temperature range	-40°C ... 70°C (observe derating)	-40°C ... 70°C (observe derating)
Air and creepage distances between the circuits	DIN EN 50178, EN 60079-15	DIN EN 50178, EN 60079-15
Rated surge voltage/insulation	Basic insulation 4 kV between all current paths and housing Safe isolation, 6 kV reinforced insulation from the control circuit (A1/A2) and diagnostics circuit (0V/21/22) to the enabling current path (13/14)	Basic insulation 4 kV between all current paths and housing Safe isolation, 6 kV reinforced insulation from the control circuit and confirmation current path to the enabling current path
Screw connection rigid / flexible / AWG	0.2 - 2.5 mm^2 / 0.2 - 2.5 mm^2 / 26 - 12	0.2 - 2.5 mm^2 / 0.2 - 2.5 mm^2 / 26 - 12
Dimensions W / H / D	6.8 mm / 93.1 mm / 102.5 mm	6.8 mm / 93.1 mm / 102.5 mm
EMC note	Class A product, see page 527	Class A product, see page 527

Description	Ordering data: Type	Order No.	Pcs./Pkt.	Ordering data: Type	Order No.	Pcs./Pkt.
Coupling relay for failsafe controllers						
	PSR-PS22-1NO-1NC-24VDC-SC	2702524	1	**PSR-PS23-1NO-1NC-24VDC-SC**	2702663	1

Highly compact, safe coupling relays for failsafe controllers

- SIL coupling relay for safety-related switch-off
- Single- or two-channel control
- 1 digital signal output
- Easy proof test
- Active error acknowledgment via A1
- Integrated test pulse filter
- Self-monitoring, with device-internal locking
- Manual or automatic activation
- Forcibly guided contacts in accordance with EN 50205
- Up to SIL 3 in accordance with IEC 61508, IEC 61511, and IEC 50156
- Other approvals: ATEX/IECEx Zone 2, UL Class 1 Zone 2 / Class 1 Div. 2, ISA-S71.04 (G3), DNV GL (applied for)

SIL 3 in accordance with IEC 61508, 1 enabling current path

SIL 3 in accordance with IEC 61508, 2 enabling current paths

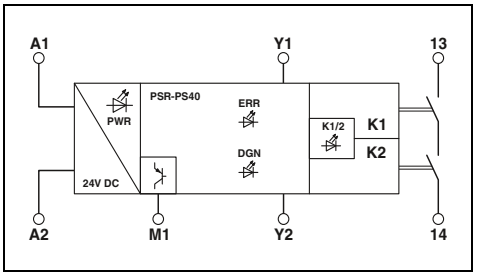

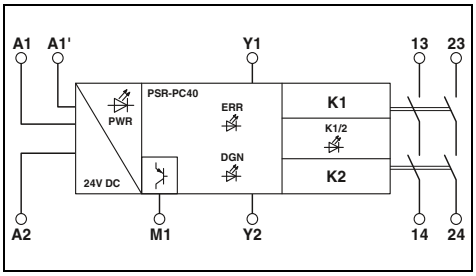

	Technical data	Technical data
Input data		
Rated control supply voltage U_S	24 V DC -15% / +10% (A1/A2)	24 V DC -15% / +10% (A1/A2)
Rated control supply current I_S	typ. 50 mA (depending on load M1 +100 mA)	typ. 75 mA (depending on load M1 +100 mA)
Typical starting time with U_s	< 200 ms (when controlled via A1, automatic start)	< 200 ms (when controlled via A1, automatic start)
Typical release time	< 35 ms (when controlled via A1)	< 35 ms (when controlled via A1)
Recovery time	500 ms	500 ms
Output data		
Contact type	1 enabling current path	2 enabling current paths
Contact material	$AgSnO_2$	$AgSnO_2$
Switching voltage	min. 12 V AC/DC / max. 250 V AC/DC (observe the load curve)	min. 12 V AC/DC / max. 250 V AC/DC (observe the load curve)
Limiting continuous current	6 A (high demand), 4 A (low demand)	6 A (high demand), 4 A (low demand)
Inrush current	min. 3 mA / max. 6 A	min. 3 mA, max. 6 A
Switching capacity	min. 60 mW	min. 60 mW
Short-circuit protection of the output circuits	6 A gL/gG 4 A gL/gG (for low-demand applications)	6 A gL/gG 4 A gL/gG (for low-demand applications)
Alarm outputs		
Number of outputs	1 (non-safety-related)	1 (non-safety-related)
Output current	max. 100 mA	max. 100 mA
Short-circuit protection	no	no
Output fuse	150 mA fast blow	150 mA fast blow
General data		
Ambient temperature range	-40°C ... 70°C (observe derating)	-40°C ... 70°C (observe derating)
Air and creepage distances between the circuits	DIN EN 50178, EN 60079-15	DIN EN 50178, EN 60079-15
Rated surge voltage/insulation	Safe isolation, reinforced insulation 6 kV from control circuit, start circuit, signal output to the enabling current path; 4 kV / basic insulation between all current paths and housing	Safe isolation, 6 kV reinforced insulation from control circuit, start circuit, signal output to the enabling current paths, 4 kV/basic insulation between the enabling current paths and between all current paths and housing
Screw connection rigid / flexible / AWG	0.2 - 2.5 mm^2 / 0.2 - 2.5 mm^2 / 26 - 12	0.2 - 2.5 mm^2 / 0.2 - 2.5 mm^2 / 24 - 12
Spring-cage connection rigid / flexible / AWG	-	0.2 - 1.5 mm^2 / 0.2 - 1.5 mm^2 / 24 - 16
Dimensions W / H / D — Screw version	6.8 mm / 93.1 mm / 102.5 mm	12.5 mm / 112.2 mm / 114.5 mm
Dimensions W / H / D — Spring-cage version	-	12.5 mm / 116.6 mm / 114.5 mm
EMC note	Class A product, see page 527	Class A product, see page 527

Ordering data

Description	Type	Order No.	Pcs./Pkt.	Type	Order No.	Pcs./Pkt.
Coupling relay for failsafe controllers						
with screw connection	**PSR-PS40-1NO-1DO-24DC-SC**	2700398	1	**PSR-PC40-2NO-1DO-24DC-SC**	2700588	1
with spring-cage connection				**PSR-PC40-2NO-1DO-24DC-SP**	2700589	1

Safety relay modules for the process industry – PSRmini

Highly compact, safe coupling relays for failsafe controllers

- SIL coupling relay for safety-related switch-off
- Easy proof test
- Forcibly guided contacts in accordance with EN 50205
- Up to SIL 3 in accordance with IEC 61508, IEC 61511, and IEC 50156
- Other approvals: ATEX/IECEx Zone 2, UL Class 1 Zone 2 / Class 1 Div. 2, ISA-S71.04 (G3), DNV GL (applied for)

PSR-PC20:

- Single-channel control
- Active error acknowledgment via A1
- Integrated test pulse filter
- DIN rail connector for easy bridging of the supply voltage

PSR-PC32:

- Wide-range input
- 2 enabling current paths: One to 230 V AC/DC One to 60 V AC/DC

SIL 3 in accordance with IEC 61508, 1 enabling current path (protected as an option), 1 diagnostic current path

SIL 3 in accordance with IEC 61508, 2 enabling current paths, 1 diagnostic current path, wide-range input

Ex:

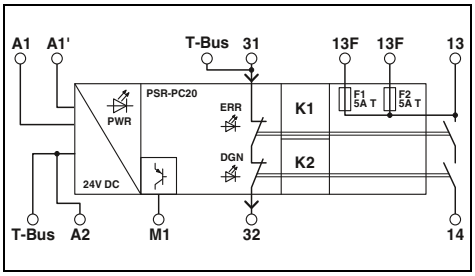

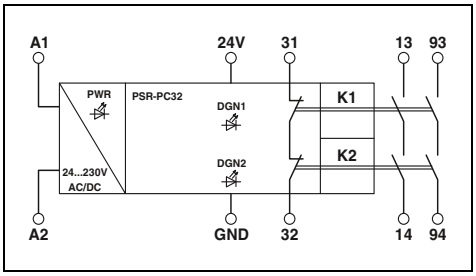

	Technical data	Technical data
Input data		
Rated control supply voltage U_S	24 V DC -15% / +10% (A1/A2)	24 V AC/DC ... 230 V AC/DC -15% ... +10%
Rated control supply current I_S	typ. 50 mA	75 mA (24 V DC)
Typical starting time with U_s	< 100 ms (with U_s when controlled via A1)	
Typical release time	< 35 ms (when controlled via A1)	< 200 ms (with U_s when controlled via A1)
Recovery time	500 ms	< 500 ms
Output data		
Contact type	1 enabling current path 1 confirmation current path	2 enabling current paths 1 confirmation current path
Contact material	$AgSnO_2$	$AgSnO_2$
Switching voltage	min. 12 V AC/DC / max. 250 V AC/DC (observe the load curve)	min. 12 V AC/DC / max. 250 V AC/DC (13/14, observe the load curve) / max. 60 V AC/DC (93/94, observe the load curve)
Limiting continuous current	6 A (13/14 for high-demand), 4 A (13F/14 for high/low-demand, 13/14 for low-demand)	6 A (observe derating)
Inrush current	min. 3 mA / max. 6 A (N/O contact 13/14)	min. 3 mA, max. 6 A
Switching capacity	min. 60 mW	min. 60 mW
Short-circuit protection of the output circuits	6 A gL/gG (N/O contact 13/14) 4 A gL/gG (for low-demand applications)	6 A gL/gG 4 A gL/gG (for low-demand applications)
Alarm outputs		
Number of outputs	1 (non-safety-related)	-
Output current	max. 100 mA	-
Short-circuit protection	no	-
Output fuse	150 mA fast blow	-
General data		
Ambient temperature range	-40°C ... 70°C (observe derating)	-40°C ... 70°C (observe derating)
Air and creepage distances between the circuits	DIN EN 50178, EN 60079-15	DIN EN 50178, EN 60079-15
Rated surge voltage/insulation	Safe isolation, 6 kV reinforced insulation from control circuit, start circuit, confirmation current path, signal output to the enabling current path; 4 kV/basic insulation between all current paths and housing	Basic insulation 4 kV between all current paths and housing Safe isolation, reinforced insulation 2.5 kV between (93/94) and (31/32, 24V/GND) Safe isolation, reinforced insulation 6 kV: between (A1/A2) and (13/14) and (31/32, 24V/GND) between (A1/A2) and (93/94) between (13/14) and (93/94)
Screw connection rigid / flexible / AWG	0.2 - 2.5 mm^2 / 0.2 - 2.5 mm^2 / 24 - 12	0.2 - 2.5 mm^2 / 0.2 - 2.5 mm^2 / 24 - 12
Spring-cage connection rigid / flexible / AWG	0.2 - 1.5 mm^2 / 0.2 - 1.5 mm^2 / 24 - 16	0.2 - 1.5 mm^2 / 0.2 - 1.5 mm^2 / 24 - 16
Dimensions W / H / D — Screw version	12.5 mm / 112.2 mm / 114.5 mm	17.5 mm / 112.2 mm / 114.5 mm
Dimensions W / H / D — Spring-cage version	12.5 mm / 116.6 mm / 114.5 mm	17.5 mm / 117.4 mm / 114.5 mm
EMC note	Class A product, see page 527	Class A product, see page 527

Ordering data

Description	Type	Order No.	Pcs./Pkt.	Type	Order No.	Pcs./Pkt.
Coupling relay for failsafe controllers						
with screw connection	**PSR-PC20-1NO-1NC-24DC-SC**	2700577	1	**PSR-PC32-2NO-1NC-24-230UC-SC**	2700581	1
with spring-cage connection	**PSR-PC20-1NO-1NC-24DC-SP**	2700578	1	**PSR-PC32-2NO-1NC-24-230UC-SP**	2700582	1

Accessories

DIN rail connector (TBUS), for bridging the supply voltage, with UL approval	**ME 6,2 TBUS-2 1,5/5-ST-3,81 GN**	2869728	10			

Highly compact, safe coupling relays for failsafe controllers

- SIL coupling relay for safety-related switch-on
- Single- or two-channel control
- Can be used in low-demand applications
- Integrated test pulse filter
- Up to SIL 3 in accordance with IEC 61508, IEC 61511, and IEC 50156

PSR-PC50:

- 1 enabling current path, 1 digital signal output
- Configurable Off state diagnostics
- Other approvals: ATEX/IECEx Zone 2, UL Class 1 Zone 2 / Class 1 Div. 2, ISA-S71.04 (G3), DNV GL (applied for)

PSR-PC51/PC52:

- 1 enabling current path, 1 diagnostic current path
- Configurable Off and On state diagnostics
- Other approvals: ISA-S71.04 (G3)

SIL-3-certified coupling relay for safe switch-on (F&G), Off state diagnostics

SIL-3-certified coupling relay for safe switch-on (F&G), Off and On state diagnostics

Ex:

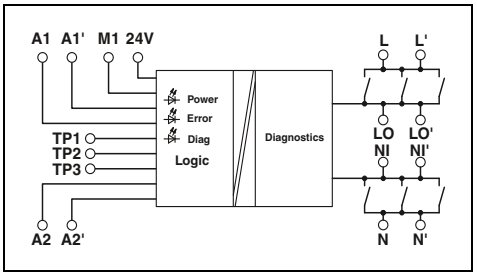

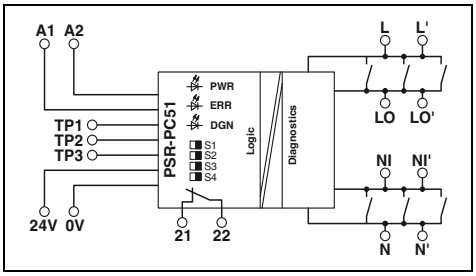

	Technical data	Technical data
Input data		
Rated control supply voltage U_S	24 V DC -15% / +10% (A1/A2)	24 V DC -15% / +10%
Rated control supply current I_S	typ. 65 mA (A1/A2)	typ. 75 mA
Typical starting time with U_s	30 ms (when controlled via A1)	typ. 100 ms (when controlled via A1-A2)
Typical release time	30 ms (when controlled via A1)	typ. 30 ms (when controlled via A1-A2)
Recovery time	1 s	1 s (when controlled via A1-A2)
Output data		
Contact type	1 enabling current path	1 enabling current path 1 signaling current path
Contact material	AgNi, gold-flashed	AgNi, gold-flashed, Ag alloy
Switching voltage	min. 15 V AC/DC without diagnostics / min. 20 V AC/DC (with diagnostics) / max. 250 V AC	min. 16 V AC/DC / max. 250 V AC / max. 125 V DC
Limiting continuous current	5 A	3 A (observe derating, load type, and on-load voltage)
Inrush current	min. 100 mA / max. 5 A	min. 50 mA, max. 5 A (Δt ≤ 1 s)
Switching capacity	min. 1.5 W	min. 1 W
Alarm outputs		
Number of outputs	1 (digital)	-
Output current	max. 100 mA	-
Short-circuit protection	no	-
Output fuse	150 mA fast blow	-
General data		
Ambient temperature range	-20°C ... 55°C	-25°C ... 60°C (observe derating)
Air and creepage distances between the circuits	DIN EN 50178	DIN EN 50178
Rated surge voltage/insulation	6 kV/safe isolation (through protective impedance)	Basic insulation 4 kV between all current paths and housing Safe isolation, 6 kV reinforced insulation from (A1/A2, 24V/0V, 21/22, and TP1/TP2/TP3) to the enabling current path (L, L', LO, LO', NI, NI', N,N')
Screw connection rigid / flexible / AWG	0.2 - 2.5 mm^2 / 0.2 - 2.5 mm^2 / 24 - 12	0.2 - 2.5 mm^2 / 0.2 - 2.5 mm^2 / 24 - 12
Spring-cage connection rigid / flexible / AWG	0.2 - 1.5 mm^2 / 0.2 - 1.5 mm^2 / 24 - 16	0.2 - 1.5 mm^2 / 0.2 - 1.5 mm^2 / 24 - 16
Dimensions W / H / D — Screw version	17.5 mm / 112.2 mm / 114.5 mm	17.5 mm / 112.2 mm / 114.5 mm
Dimensions W / H / D — Spring-cage version	17.5 mm / 117.4 mm / 114.5 mm	17.5 mm / 117.4 mm / 114.5 mm
EMC note	Class A product, see page 527	Class A product, see page 527

Description	Ordering data: Type	Order No.	Pcs./Pkt.	Ordering data: Type	Order No.	Pcs./Pkt.
Coupling relay for failsafe controllers						
with screw connection	**PSR-PC50-1NO-1DO-24DC-SC**	2904664	1	**PSR-PC51-1NO-1NC-24DC-SC**	2702522	1
with spring-cage connection	**PSR-PC50-1NO-1DO-24DC-SP**	2904665	1	**PSR-PC51-1NO-1NC-24DC-SP**	2702523	1
Coupling relay for failsafe controllers						
with screw connection				**PSR-PC52-1NO-1NC-24DC-SC**	1017062	1
with spring-cage connection				**PSR-PC52-1NO-1NC-24DC-SP**	1017064	1

Emergency stop coupling relay for failsafe controllers

- SIL coupling relay for safety-related switch-off
- Single- or two-channel control
- 1 enabling current path, 1 confirmation current path
- Can be used in high and low-demand applications
- Easy proof test
- Integrated test pulse filter
- Replaceable fuse
- Forcibly guided contacts in accordance with EN 50205
- Up to SIL 3 in accordance with IEC 61508, IEC 61511, and IEC 50156

Notes:

Can be used for system cabling with the Termination Carrier.
For further information, see page 257

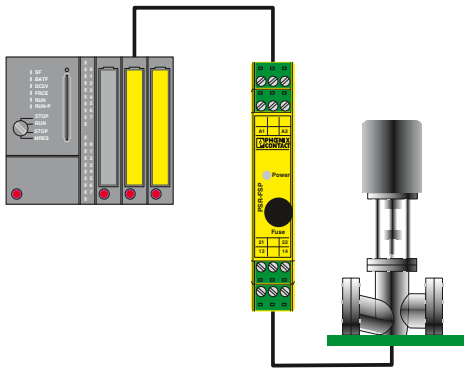

Example of electrical isolation of a safety PLC output from the field.

SIL 3 in accordance with IEC 61508, 1 protected enabling current path

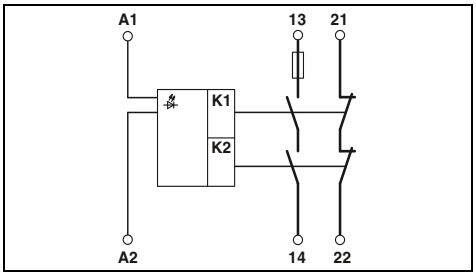

Technical data

Input data	
Rated control supply voltage U_S	24 V DC -15% / +10%
Rated control supply current I_S	typ. 55 mA
Typical starting time with U_s	50 ms
Typical release time	50 ms
Recovery time	1 s
Output data	
Contact type	1 enabling current path 1 confirmation current path
Contact material	AgCuNi, + 0.2 µm Au
Max./min. switching voltage	250 V AC/DC / 15 V AC/DC
Limiting continuous current	5 A (N/O contact, observe derating), 100 mA (N/C contact)
Max./min. inrush current	5 A (N/O contact), 100 mA (N/C contact) / 5 mA
Switching capacity (3600/h cycles)	5 A (24 V (DC13)) ; 5 A (230 V (AC15))
Short-circuit protection of the output circuits	5 A T fuse (N/O contact) 150 mA Fast-blow (N/C contact)
General data	
Ambient temperature range	-20°C ... 55°C (observe derating)
Air and creepage distances between the circuits	DIN EN 50178/VDE 0160
Rated surge voltage/insulation	Safe isolation, reinforced insulation 6 kV between the control circuits (A1/A2), (21/22), (13/14)
Screw connection rigid / flexible / AWG	0.2 - 2.5 mm^2 / 0.2 - 2.5 mm^2 / 24 - 12
Spring-cage connection rigid / flexible / AWG	0.2 - 1.5 mm^2 / 0.2 - 1.5 mm^2 / 24 - 16
Dimensions W / H / D — Screw version	17.5 mm / 99 mm / 114.5 mm
Dimensions W / H / D — Spring-cage version	17.5 mm / 112 mm / 114.5 mm
EMC note	Class A product, see page 527

Ordering data

Description	Type	Order No.	Pcs./Pkt.
Emergency stop coupling relay for failsafe controllers in process engineering, with protected enabling current path			
with screw connection	**PSR-SCP- 24DC/FSP/1X1/1X2**	2981978	1
with spring-cage connection	**PSR-SPP- 24DC/FSP/1X1/1X2**	2981981	1

Emergency stop coupling relay for failsafe controllers

- SIL coupling relay for safety-related switch-off
- Single- or two-channel control
- 2 enabling current paths, 1 confirmation current path
- Can be used in high and low-demand applications
- Easy proof test
- Integrated test pulse filter
- Forcibly guided contacts in accordance with EN 50205
- Up to SIL 2/3 in accordance with IEC 61508, IEC 61511, and IEC 50156

SIL 2 in accordance with IEC 61508, 2 enabling current paths

SIL 3 in accordance with IEC 61508, 2 enabling current paths

Notes:

Can be used for system cabling with the Termination Carrier.
For further information, see page 257

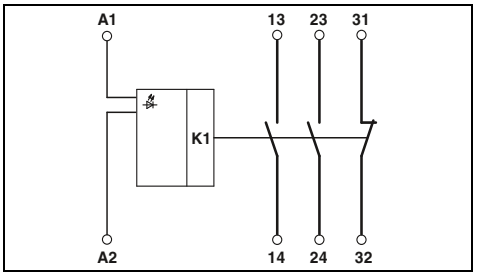

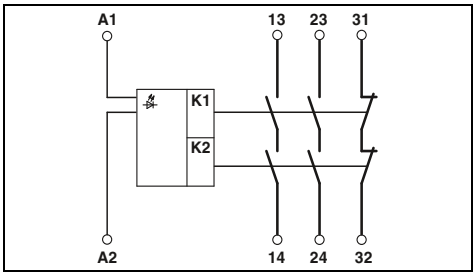

	Technical data	Technical data
Input data		
Rated control supply voltage U_S	24 V DC -15% / +10%	24 V DC -15% / +10%
Rated control supply current I_S	typ. 55 mA	typ. 55 mA
Typical starting time with U_s	50 ms	50 ms
Typical release time	50 ms	50 ms
Recovery time	1 s	1 s
Output data		
Contact type	2 enabling current paths 1 confirmation current path	2 enabling current paths 1 confirmation current path
Contact material	AgCuNi, + 0.2 µm Au	AgCuNi, + 0.2 µm Au
Max./min. switching voltage	250 V AC/DC / 15 V AC/DC	250 V AC/DC / 15 V AC/DC
Limiting continuous current	5 A (N/O contact, observe derating), 100 mA (N/C contact)	5 A (N/O contact, observe derating), 100 mA (N/C contact)
Max./min. inrush current	5 A (N/O contact), 100 mA (N/C contact) / 5 mA	5 A (N/O contact), 100 mA (N/C contact) / 5 mA
Switching capacity (3600/h cycles)	5 A (24 V (DC13)) ; 5 A (230 V (AC15))	5 A (24 V (DC13)) ; 5 A (230 V (AC15))
Short-circuit protection of the output circuits	10 A gL/gG (N/O contact) 4 A gL/gG (for low-demand applications) 150 mA Fast-blow (N/C contact)	10 A gL/gG (N/O contact) 4 A gL/gG (for low-demand applications) 150 mA Fast-blow (N/C contact)
General data		
Ambient temperature range	-20°C ... 55°C (observe derating)	-20°C ... 55°C (observe derating)
Air and creepage distances between the circuits	DIN EN 50178/VDE 0160	DIN EN 50178/VDE 0160
Rated surge voltage/insulation	Safe isolation, reinforced insulation 6 kV between the control circuits (A1/A2), (31/32), (13/14, 23/24)	Safe isolation, reinforced insulation 6 kV between the control circuits (A1/A2), (31/32), (13/14, 23/24)
Screw connection rigid / flexible / AWG	0.2 - 2.5 mm² / 0.2 - 2.5 mm² / 24 - 12	0.2 - 2.5 mm² / 0.2 - 2.5 mm² / 24 - 12
Spring-cage connection rigid / flexible / AWG	0.2 - 1.5 mm² / 0.2 - 1.5 mm² / 24 - 16	0.2 - 1.5 mm² / 0.2 - 1.5 mm² / 24 - 16
Dimensions W / H / D — Screw version	17.5 mm / 99 mm / 114.5 mm	17.5 mm / 99 mm / 114.5 mm
Dimensions W / H / D — Spring-cage version	17.5 mm / 112 mm / 114.5 mm	17.5 mm / 112 mm / 114.5 mm
EMC note	Class A product, see page 527	Class A product, see page 527

Ordering data

Description	Type	Order No.	Pcs./Pkt.	Type	Order No.	Pcs./Pkt.
Emergency stop coupling relay, for failsafe controllers, two enabling current paths, **SIL 2 in accordance with IEC 61508**						
with screw connection	**PSR-SCP- 24DC/FSP2/2X1/1X2**	2986575	1			
with spring-cage connection	**PSR-SPP- 24DC/FSP2/2X1/1X2**	2986588	1			
Emergency stop coupling relay, for failsafe controllers, two enabling current paths, **SIL 3 in accordance with IEC 61508**						
with screw connection				**PSR-SCP- 24DC/FSP/2X1/1X2**	2986960	1
with spring-cage connection				**PSR-SPP- 24DC/FSP/2X1/1X2**	2986957	1

Safe coupling relay for emergency stop and safety door monitoring

- SIL coupling relay for safety-related switch-off
- Single and two-channel control
- 2 enabling current paths, 1 confirmation current path
- Manual and automatic activation in a single device
- With inrush current reduction, therefore suitable for coupling to failsafe controllers
- Forcibly guided contacts in accordance with EN 50205
- Up to SIL 3 Termination Carrier IEC 61508 and IEC 61511

Manual or automatic activation, also suitable for failsafe PLC

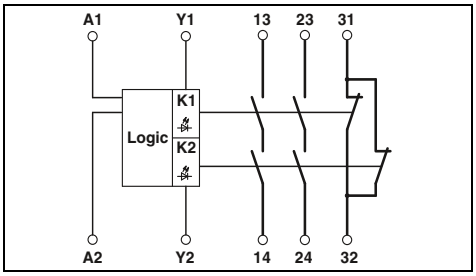

Technical data

Input data	
Rated control supply voltage U_S	24 V DC -15% / +10%
Rated control supply current I_S	typ. 50 mA DC
Typical response time	60 ms (automatic/manual start)
Typical release time	20 ms
Recovery time	approx. 1 s
Output data	
Contact type	2 enabling current paths 1 signaling current path (type B in accordance with EN 50205)
Contact material	$AgSnO_2$, gold-flashed
Max./min. switching voltage	250 V AC/DC / 10 V
Limiting continuous current	6 A (N/O contact/N/C contact, high demand), 4 A (N/O contact/N/C contact, low demand)
Max./min. inrush current	6 A / 10 mA
Switching capacity (360/h cycles)	5 A (24 V DC) ; 5 A (230 V AC)
Switching capacity (3600/h cycles)	5 A (24 V (DC13)) ; 5 A (230 V (AC 15))
Short-circuit protection of the output circuits	6 A gL/gG NEOZED (high demand) 4 A gL/gG NEOZED (low demand)
General data	
Ambient temperature range	-20°C ... 55°C
Air and creepage distances between the circuits	DIN EN 50178/VDE 0160
Rated surge voltage/insulation	6 kV / Safe isolation, reinforced insulation
Screw connection rigid / flexible / AWG	0.2 - 2.5 mm^2 / 0.2 - 2.5 mm^2 / 24 - 12
Spring-cage connection rigid / flexible / AWG	0.2 - 1.5 mm^2 / 0.2 - 1.5 mm^2 / 24 - 16
Dimensions W / H / D — Screw version	22.5 mm / 99 mm / 114.5 mm
Dimensions W / H / D — Spring-cage version	22.5 mm / 112 mm / 114.5 mm
EMC note	Class A product, see page 527

Ordering data

Description	Type	Order No.	Pcs./Pkt.
Process technology, emergency stop and safety door monitoring, single-channel, activation: manual and automatic			
with screw connection	**PSR-SCP- 24DC/ESP4/2X1/1X2**	2981020	1
with spring-cage connection	**PSR-SPP- 24DC/ESP4/2X1/1X2**	2981017	1

Termination Carriers for coupling relays

- Convenient and error-free connection using pre-assembled system cables
- 1:1 signal allocation to a 37-pos. D-SUB connector
- Redundant power supply, decoupled from diode and protected against polarity reversal
- Integrated undervoltage detection with separate signal path

Notes:
Cables and bridge plugs are not supplied as standard with the Termination Carriers.
PSRmini – Termination Carriers for highly compact coupling relays can be found at phoenixcontact.net/products.

Termination Carrier for up to 16 PSR-FSP modules

Termination Carrier for up to 16 PSR-PC50 modules

EAC

	Housing width 304 mm	Housing width 304 mm
	Technical data	**Technical data**
General data		
Connection to the control system level	D-SUB pin strip	D-SUB pin strip
No. of pos.	37	37
Maximum operating voltage	< 50 V DC (per signal/channel)	< 50 V DC (per signal/channel)
Maximum permissible current	1 A (signal/channel)	1 A (signal/channel)
Rated insulation voltage	50 V (basic insulation)	50 V (basic insulation)
Ambient temperature range	-20°C ... 60°C	-20°C ... 60°C
Flammability rating in accordance with UL 94	V0	V0
Dimensions W/H/D	304 / 170 / 160 mm	304 / 170 / 160 mm
EMC note	Class A product, see page 527	Class A product, see page 527
Supply		
Input voltage range	21.1 V DC ... 26.4 V DC	21.1 V DC ... 26.4 V DC
Redundant supply	yes, decoupled from diodes	yes, decoupled from diodes
Polarization and surge protection	Yes	Yes
Fuse	2.5 A on PCB, slow-blow (replaceable)	2.5 A on PCB, slow-blow (replaceable)
Status indication	2 x red LED (error) 2x green LEDs (PWR1 and PWR2)	2 x red LED (error) 2x green LEDs (PWR1 and PWR2)
Undervoltage monitoring	At < 18 V (alarm contact, 1 N/O contact)	At < 18 V (alarm contact, 1 N/O contact)

	Ordering data			Ordering data		
Description	**Type**	**Order No.**	Pcs./Pkt.	**Type**	**Order No.**	Pcs./Pkt.
Termination Carrier for 16 coupling relays For safety-related **switch-off**	**TC-2D37SUB-DO16-ESD-AR-UNI**	2902913	1			
For safety-related **switch-on**				**TC-2D37SUB-DO16-F&G-AR-UNI**	2902914	1
	Accessories			**Accessories**		
Cable set without use of confirmation contact, suitable for PSR-FSP/Order No.: 2981978	**TC-C-PSR3-SC-A10000A20000**	2903389	16			
Cable set with use of confirmation contact, suitable for PSR-FSP/Order No.: 2986960 and 2986575	**TC-C-PSR3-SC-A10000A23132**	2903390	16			
Bridge plug for occupying unused module slots, suitable for PSR-FSP/Order No.: 2986960 and 2986575	**TC-C-PTSM-50-00000000J1J1**	2903388	8			
Cable set				**TC-C-PCX3-SC-A100V+A20000**	2906003	16

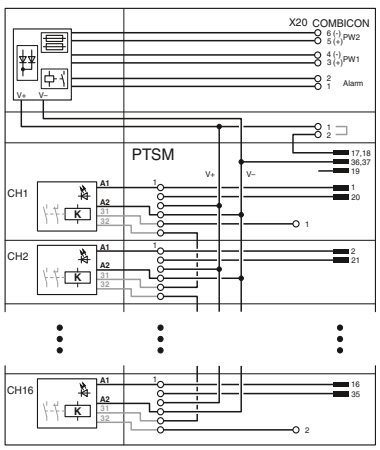

Connection scheme TC-2D37SUB-DO16-ESD-AR-UNI

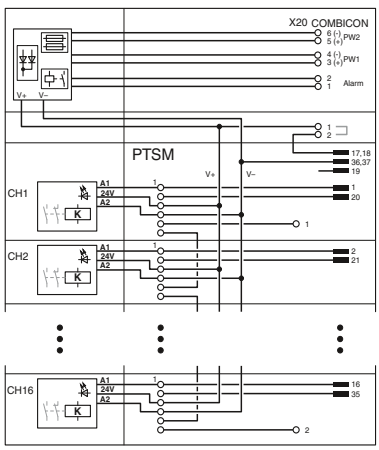

Connection scheme TC-2D37SUB-DO16-F&G-AR-UNI

Safety relay modules for the process industry – Applications

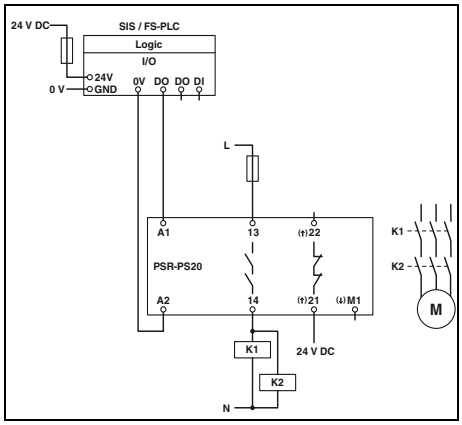

PSR-PS20
– Single-channel control via A1 with diagnostic supply voltage applied to contact 21
– Suitable for low-demand applications

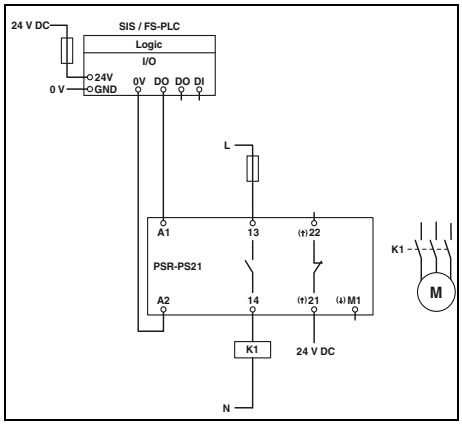

PSR-PS21
– Single-channel control via A1 with diagnostic supply voltage applied to contact 21
– Suitable for low-demand applications

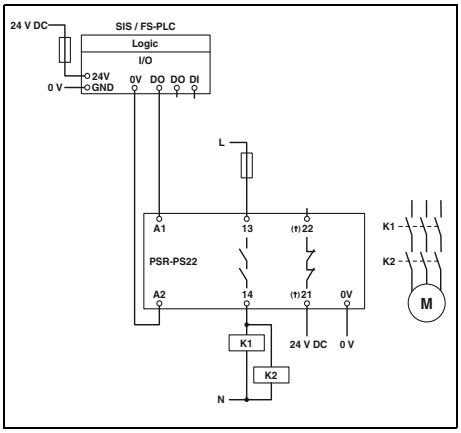

PSR-PS22
– Single-channel control via A1 with diagnostic supply voltage applied to contact 21
– Suitable for low-demand applications

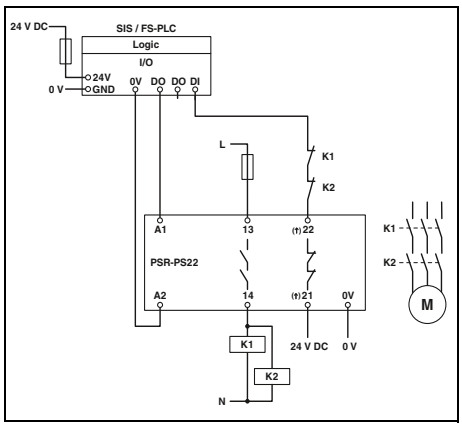

PSR-PS22
– Single-channel control via A1 with diagnostic supply voltage applied to contact 21
– Integration of the confirmation current path
– Suitable for high-demand applications

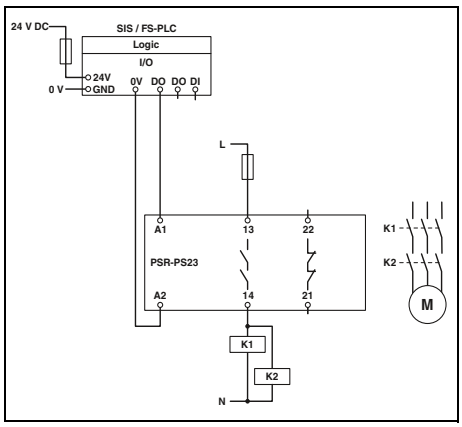

PSR-PS23
– Single-channel control via A1
– Suitable for low-demand applications

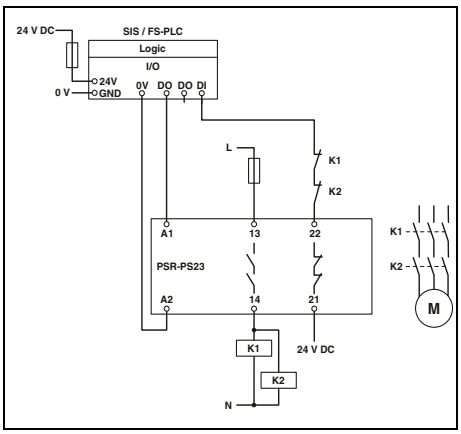

PSR-PS23
– Single-channel control via A1 with diagnostic supply voltage applied to contact 21
– Integration of the confirmation current path
– Suitable for high-demand applications

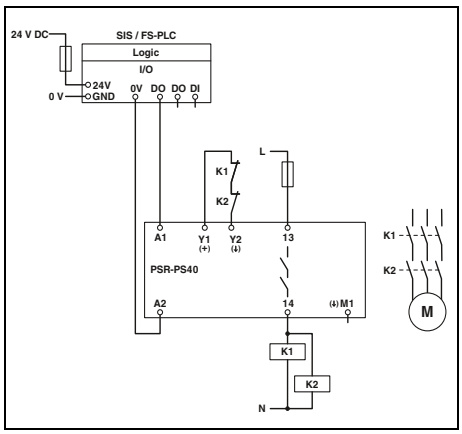

PSR-PS40
– Single-channel control via A1 with automatic activation
– Suitable for low-demand applications

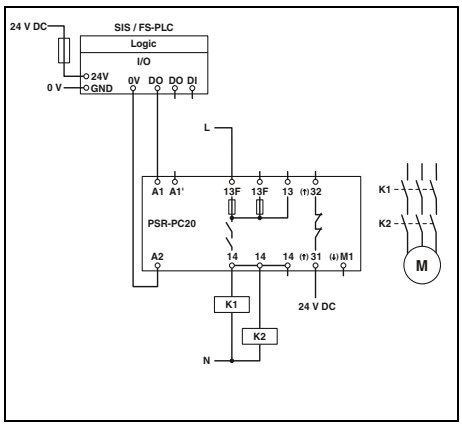

PSR-PC20
– Single-channel control via A1 with diagnostic supply voltage applied to contact 31
– Suitable for low-demand applications

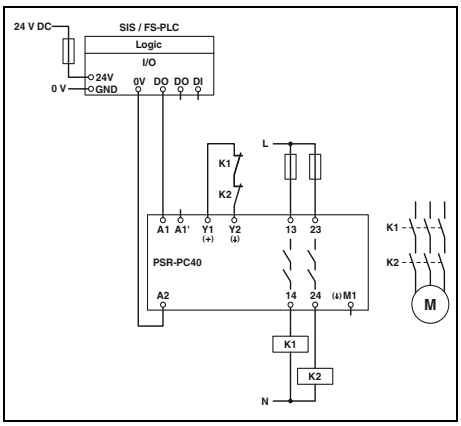

PSR-PC40
– Single-channel control via A1 with automatic activation
– Suitable for low-demand applications

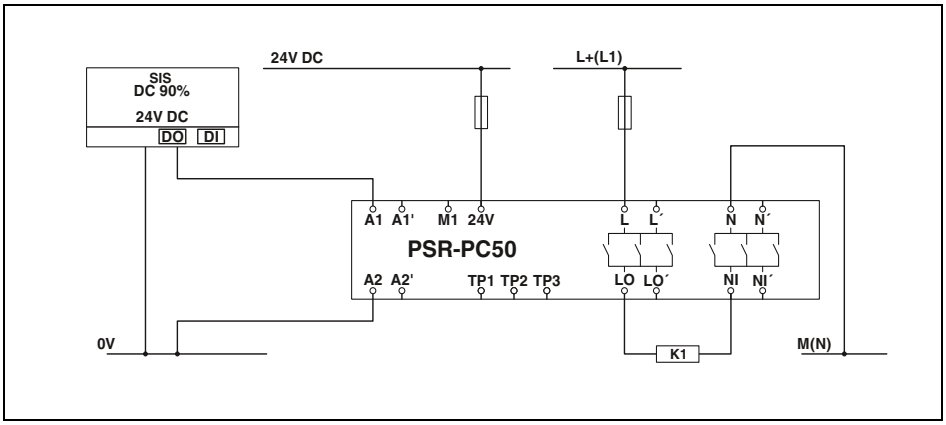

PSR-PC50
– Single-channel control via A1 with diagnostic supply voltage applied
– Suitable for low-demand applications

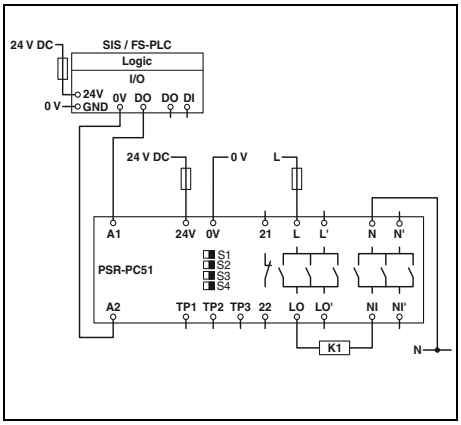

PSR-PC51/PC52
– Single-channel control via A1 with diagnostic supply voltage applied
– Suitable for low-demand applications

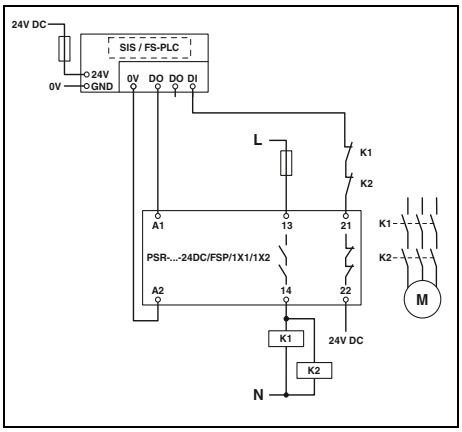

PSR-FSP/1X1
– Single-channel control with integration of the confirmation current path
– Suitable for high- and low-demand applications

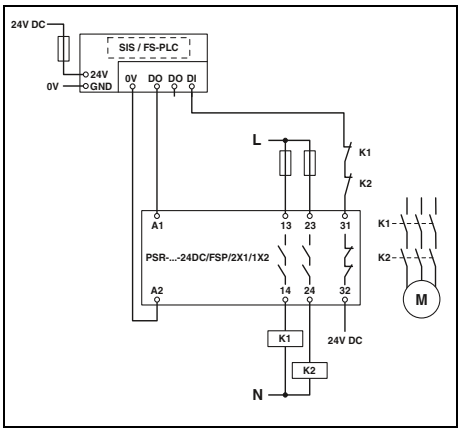

PSR-FSP/2X1
– Single-channel control with integration of the confirmation path
– Suitable for high- and low-demand applications

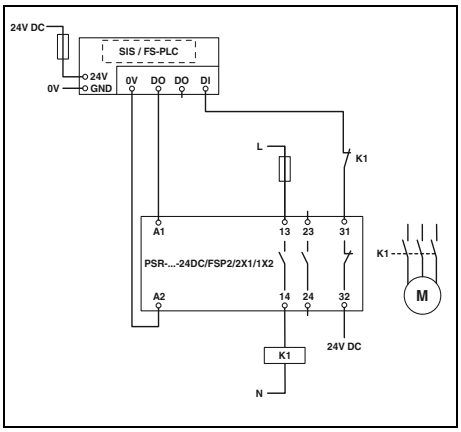

PSR-FSP2/2X1
– Single-channel control via A1 with integration of the confirmation current path
– Suitable for high- and low-demand applications

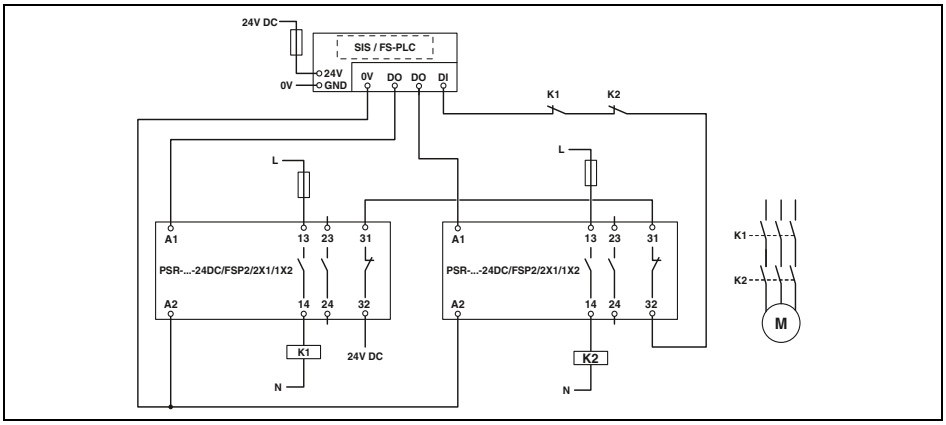

PSR-FSP2/2X1
– Two-channel control with integration of the confirmation path
– Suitable for high- and low-demand applications

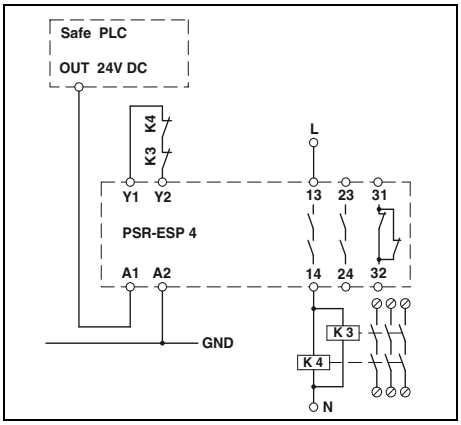

PSR-ESP4
– Single-channel connection to failsafe controller with automatic start

Configurable PSRtrisafe safety modules

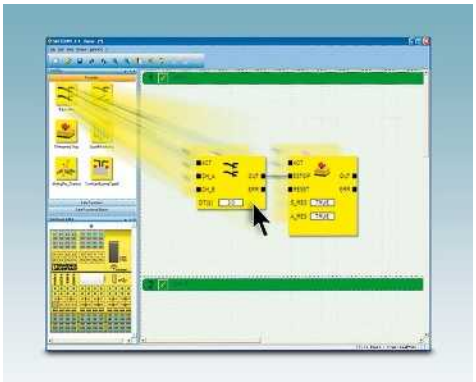

Easy configuration with SAFECONF

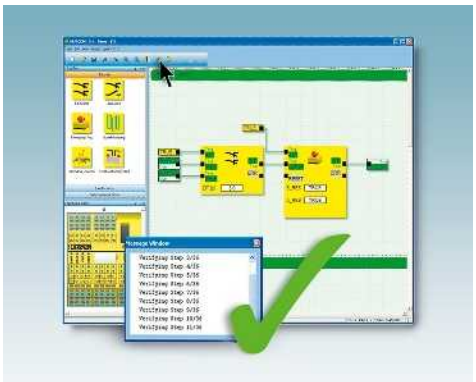

Simulation and diagnostics

Use the PSRtrisafe configurable safety modules to combine all safety functions in accordance with your requirements.

You can flexibly adapt the PSRtrisafe system to your application requirements using various safe extension modules and fieldbus couplers. The safety logic is created very easily with the SAFECONF configuration software via drag and drop.

PSRtrisafe configurable safety modules

The PSR-TRISAFE-S stand-alone version is available with 20 safe inputs and four safe outputs. The PSR-TRISAFE-M master module can be extended with additional digital inputs and outputs. You can integrate additional relay outputs using the PSR-TS-SDOR4 extension module.

The diagnostic LEDs indicate the states of all inputs and outputs. The safety module can communicate with the higher-level controller via a fieldbus coupler, thereby enabling convenient remote diagnostics.

Easy configuration

With SAFECONF, you can easily create the safety logic for PSRtrisafe with TÜV-certified blocks via drag and drop. All tools are arranged in one window, enabling you to work intuitively with the software.

The SAFECONF configuration software can be downloaded free of charge at phoenixcontact.com.

Further information on the SAFECONF configuration software can be found on page 279.

Simulation and diagnostics

Thanks to the integrated simulation mode, you can shorten your project processing times and the standard-compliant implementation of safety circuits. The safety logic can be tested and validated directly on the PC.

Your web code: #1257

Master module

- Freely configurable safety module for monitoring emergency stop, safety doors, light grids, etc.
- With 20 safe inputs, 4 safe outputs, 4 alarm outputs, and 2 clock outputs on an overall width of just 67.5 mm
- Easily graphically configurable with the SAFECONF software
- Quick startup by means of comprehensive simulation and test functions
- Option for connecting fieldbus gateways for diagnostics and signaling functions
- Incl. IFS-CONFSTICK memory stick for easy storage and backup of the configuration
- Up to Cat. 4/PL e in accordance with EN ISO 13849-1, SILCL 3 in accordance with IEC 62061

Notes:

Further information on fieldbus gateways can be found in the "Motor management" section of Catalog 5 or at phoenixcontact.net/products.

PL EN ISO 13849

SILCL IEC 62061

Cannot be extended

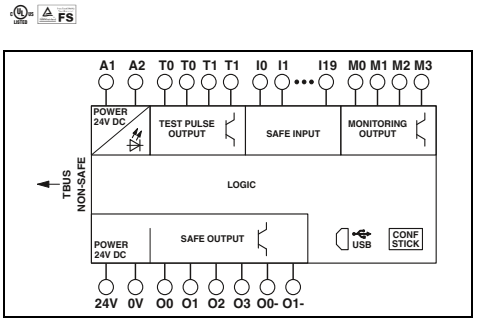

PL EN ISO 13849

SILCL IEC 62061

Safe and standard extension, including PSR-TBUS DIN rail connector

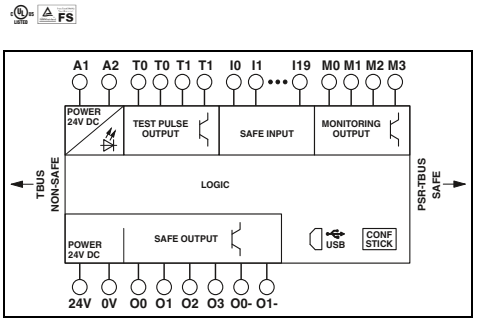

	Technical data	Technical data
Input data		
Rated control supply voltage U_S	24 V DC (A1/A2)	24 V DC (A1/A2)
Rated control supply current I_S	typ. 110 mA	typ. 110 mA
Max. response time	max. 30 ms (plus response time of PSR-TS-SDOR4)	max. 30 ms (plus response time of PSR-TS-SDOR4)
Interfaces	USB	USB
Safe digital inputs	10 (two-channel, up to SIL 3) 20 (single-channel, up to SIL 2)	10 (two-channel, up to SIL 3) 20 (single-channel, up to SIL 2)
Input voltage range "0" signal	0 V DC ... 5 V DC (for safe Off)	0 V DC ... 5 V DC (for safe Off)
Input voltage range "1" signal	11 V DC ... 30 V DC	11 V DC ... 30 V DC
Output data		
Safe digital outputs	4 (safe semiconductor outputs, up to Cat. 4 in accordance with EN ISO 13849-1) 2 (ground switching outputs)	4 (safe semiconductor outputs, up to Cat. 4 in accordance with EN ISO 13849-1) 2 (ground switching outputs)
Nominal voltage	24 V DC	24 V DC
Alarm outputs	4	4
Clock outputs	2	2
General data		
Ambient temperature range	-20°C ... 55°C	-20°C ... 55°C
Screw connection rigid / flexible / AWG	0.2 - 2.5 mm^2 / 0.2 - 2.5 mm^2 / 24 - 12	0.2 - 2.5 mm^2 / 0.2 - 2.5 mm^2 / 24 - 12
Spring-cage connection rigid / flexible / AWG	0.2 - 1.5 mm^2 / 0.2 - 1.5 mm^2 / 24 - 16	0.2 - 1.5 mm^2 / 0.2 - 1.5 mm^2 / 24 - 16
Dimensions W / H / D — Screw version	67.5 mm / 99 mm / 114.5 mm	67.5 mm / 99 mm / 114.5 mm
Dimensions W / H / D — Spring-cage version	67.5 mm / 112 mm / 114.5 mm	67.5 mm / 112 mm / 114.5 mm
EMC note	Class A product, see page 527	Class A product, see page 527

Ordering data

Description	Type	Order No.	Pcs./Pkt.	Type	Order No.	Pcs./Pkt.
Freely configurable safety module, for monitoring emergency stop, safety doors, light grids, etc., with 20 safe inputs and 4 safe outputs, 4 signaling and 2 cycle outputs						
with screw connection	**PSR-SCP- 24DC/TS/S**	2986229	1	**PSR-SCP- 24DC/TS/M**	2986012	1
with spring-cage connection	**PSR-SPP- 24DC/TS/S**	2986232	1	**PSR-SPP- 24DC/TS/M**	2986025	1

Accessories

Copy and delete station, for IFS-CONFSTICK memory modules for copying data from a master stick to up to four slave sticks, connection via USB/mini USB cable	**COPYSTATION - IFS**	2901985	1	**COPYSTATION - IFS**	2901985	1
Starter kit for the PSR-TRISAFE safety module, consists of PSR-TRISAFE demo board (with inputs and outputs), SAFECONF software, USB connecting cable (3 m), power supply	**PSR-TRISAFE STARTER KIT**	2986300	1	**PSR-TRISAFE STARTER KIT**	2986300	1
Multifunctional memory module for the Interface system	**IFS-CONFSTICK**	2986122	1	**IFS-CONFSTICK**	2986122	1
PSR-TBUS DIN rail connector, for supplying/controlling/monitoring (depending on the module)	**PSR-TBUS**	2890425	50	**PSR-TBUS**	2890425	50

Extension modules

- I/O extension for PSR-TRISAFE-M
- Slim 22.5 mm housing
- Including PSR-TBUS DIN rail connector for adapting to the PSR-TRISAFE-M master module
- Up to Cat. 4/PL e in accordance with EN ISO 13849-1, SILCL 3 in accordance with IEC 62061

Notes:

For PSR-TRISAFE-M master module, see page 261

8 safe inputs, plus 4 safe inputs or outputs

4 safe relay outputs (1-channel) or 2 safe relay outputs (2-channel)

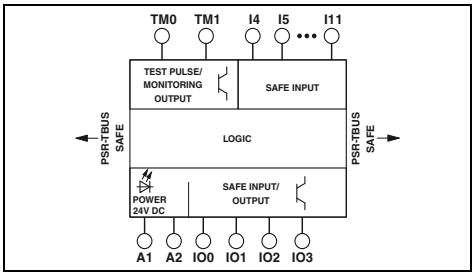

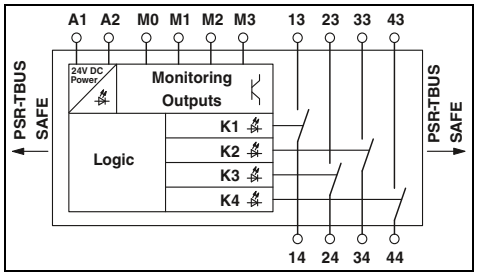

	Technical data	Technical data
Input data		
Rated control supply voltage U_S	24 V DC (electrical supply via PSR-TBUS)	24 V DC (electrical supply via PSR-TBUS)
Rated control supply current I_S	Electrical supply via PSR-TBUS	Electrical supply via PSR-TBUS
Max. response time	max. 30 ms (plus response time of PSR-TS-SDOR4)	max. 50 ms
Interfaces	DIN rail TBUS for connection to the master module, supplied as standard	DIN rail TBUS for connection to the master module, supplied as standard
Safe digital inputs	12 (of which 4 can be configured as input or output)	-
Input voltage range “0” signal	0 V DC ... 5 V DC (for safe Off)	-
Input voltage range “1” signal	11 V DC ... 30 V DC	-
Output data		
Safe digital outputs	4 (if the configurable inputs/outputs are used as outputs)	-
Nominal voltage	24 V DC	-
Cycle/alarm outputs	2	-
Switching voltage	-	min. 12 V AC/DC (from HW 03) / max. 250 V AC/DC
Limiting continuous current	-	4 A (see derating)
Switching current	-	min. 3 mA (from HW 03)
Switching capacity	-	min. 60 mW
Alarm outputs	-	4
Short-circuit protection of the output circuits		6 A gL/gG 6 A (gL / gG) 4 A (gL/gG for low-demand applications)
General data		
Ambient temperature range	-20°C ... 55°C	-20°C ... 55°C (see derating)
Screw connection rigid / flexible / AWG	0.2 - 2.5 mm² / 0.2 - 2.5 mm² / 24 - 12	0.2 - 2.5 mm² / 0.2 - 2.5 mm² / 24 - 12
Spring-cage connection rigid / flexible / AWG	0.2 - 1.5 mm² / 0.2 - 1.5 mm² / 24 - 16	0.2 - 1.5 mm² / 0.2 - 1.5 mm² / 24 - 16
Dimensions W / H / D — Screw version	22.5 mm / 99 mm / 114.5 mm	22.5 mm / 99 mm / 114.5 mm
Dimensions W / H / D — Spring-cage version	22.5 mm / 112 mm / 114.5 mm	22.5 mm / 112 mm / 114.5 mm
EMC note	Class A product, see page 527	Class A product, see page 527

Ordering data

Description	Type	Order No.	Pcs./Pkt.	Type	Order No.	Pcs./Pkt.
Extension module						
with screw connection	**PSR-SCP- 24DC/TS/SDI8/SDIO4**	2986038	1	**PSR-SCP- 24DC/TS/SDOR4/4X1**	2986096	1
with spring-cage connection	**PSR-SPP- 24DC/TS/SDI8/SDIO4**	2986041	1	**PSR-SPP- 24DC/TS/SDOR4/4X1**	2986106	1

Accessories

PSR-TBUS DIN rail connector, for supplying/controlling/monitoring (depending on the module)	**PSR-TBUS**	2890425	50	**PSR-TBUS**	2890425	50

PLC series
Terminal block with integrated test pulse and EMC filter

The **PSR-FTB** filter terminal block is used in the event of problems with 24 V signals affected by EMI and test-pulse-sensitive loads.

- Filtering of test-pulse-safe electronic outputs
- EMC filter for constant 24 V signals
- Easy wiring via Push-in connection technology

Notes:

The selection of the filter terminal block depends on several parameters (load resistance/current, voltage drop, accepted shutdown time). The parameters can be determined with the aid of more detailed documentation, see phoenixcontact.net/products.

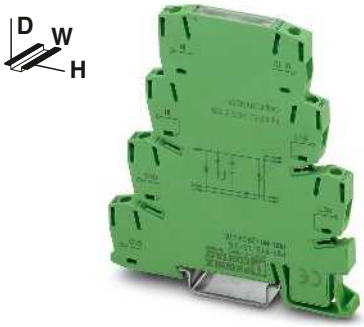

For low loads up to a maximum of 65 mA

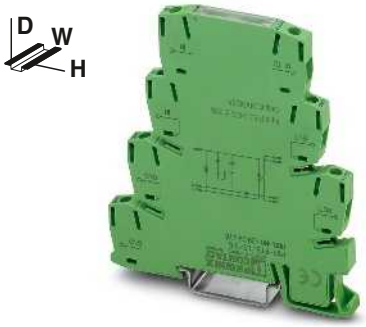

For high loads up to a maximum of 530 mA

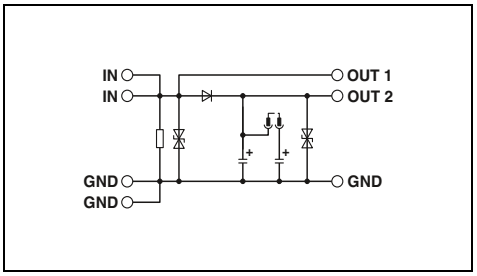

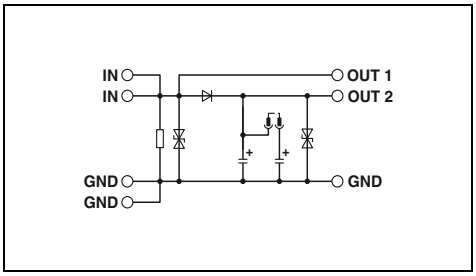

		Technical data	Technical data
Input data			
Nominal input voltage U_N		24 V DC ±20% (control voltage U_{ST} right/left)	24 V DC ±20% (control voltage U_{ST} right/left)
Typical input current at U_N		max. 15 mA	max. 20 mA
Protective circuit		Surge protection	Surge protection
General data			
Ambient temperature range		-25°C ... 55°C	-25°C ... 55°C
Rated surge voltage/insulation		1.5 kV / Basic insulation	1.5 kV / Basic insulation
Push-in connection rigid / flexible / AWG		0.14 - 2.5 mm² / 0.14 - 2.5 mm² / 26 - 26	0.14 - 2.5 mm² / 0.14 - 2.5 mm² / 26 - 26
Dimensions	W / H / D	6.2 mm / 94 mm / 80 mm	6.2 mm / 94 mm / 80 mm
EMC note		Class A product, see page 527	Class A product, see page 527

	Ordering data			Ordering data		
Description	Type	Order No.	Pcs./Pkt.	Type	Order No.	Pcs./Pkt.
PLC filter terminal block, with integrated test pulse and EMC filter						
	PSR-FTB/1.5/11.5	2904476	1	**PSR-FTB/20/86**	2904477	1

Safe I/Os

Integrate functional safety into your machine or system with the Inline, Axioline F, and Axioline E I/O systems.

Safe I/Os with PROFIsafe

Our safety-related I/O modules impress with their flexible use. Depending on the bus coupler and safety controller, the I/O modules work with PROFIsafe in PROFINET and PROFIBUS systems. We offer digital input and output modules as well as relay modules.

SafetyBridge Technology

SafetyBridge Technology means that you don't need a safety controller. You can still use your preferred standard network and standard controller.

The logic module with SafetyBridge Technology monitors safety-related communication between the safe I/O modules distributed throughout the network. The I/O extension modules acquire the safety signals and output them wherever they are required.

Axioline F – Particularly robust

The shielding concept and special design of Axioline F enable a particularly high level of EMC protection and reduced radiation. In addition, there is a good degree of mechanical robustness. Axioline F therefore increases the availability of your system.

Your web code: #1948

Inline – Particularly flexible

Inline not only offers a particularly large choice of function terminals, but also allows you to use the appropriate number of channels on modules. The corresponding branch terminal can be used to extend the local bus to the field. You can therefore create your own individual I/O solution.

The Inline ECO Safe I/O terminal is particularly cost-effective. It performs the function of two safety relays and safely disconnects aligned standard output modules.

Your web code: #1949

Axioline E – The block-based modular I/O system

Axioline E is the I/O system with a block design for field installation. Like all Axioline I/Os, Axioline E is also fast, robust, and easy.

Easy configuration

With SAFECONF, you can easily create the safety logic for SafetyBridge systems with TÜV-certified blocks via drag and drop. All tools are arranged in one window, enabling you to work intuitively with the software.

The SAFECONF configuration software can be downloaded free of charge at phoenixcontact.com.

Further information on the SAFECONF configuration software can be found on page 279.

Axioline F – Particularly robust

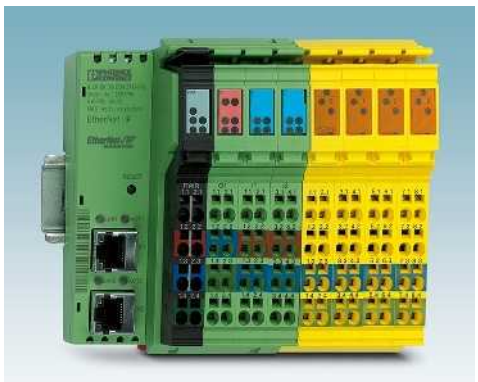

Inline – Particularly flexible

Axioline E – The block-based modular I/O system

Logic modules

The logic modules are output modules from the Inline product family with integrated safety logic. They are an integral component of a SafetyBridge system.

The logic module can be used at any point within an EtherCAT®, EtherNet/IP™, Sercos, Modbus, PROFINET or PROFIBUS system.

Features:

- Generation and monitoring of the SafetyBridge protocol
- Processing of the parameterized safety logic
- Control of 8 safe outputs onboard

Depending on the installation and parameterization, you can achieve the following safety characteristics with this module:

- Up to Cat. 4/PL e in accordance with EN ISO 13849-1, SILCL 3 in accordance with IEC 62061, SIL 3 in accordance with IEC 61508

Connection to max. 5 safe input/output modules

Connection to max. 16 safe input/output modules

		Technical data	Technical data
Local bus interface			
Connection method		Inline data jumper	Inline data jumper
Transmission speed		500 kbps / 2 Mbps (can be switched)	500 kbps / 2 Mbps (can be switched)
Power supply for module electronics			
Main circuit supply U_M		24 V DC (see safety data)	24 V DC (see safety data)
Supply voltage range U_M		19.2 V DC ... 30 V DC (including all tolerances, including ripple)	19.2 V DC ... 30 V DC (including all tolerances, including ripple)
Digital outputs			
Connection technology		2-, 3-, 4-conductor	2-, 3-, 4-conductor
Number of outputs		4 (for two-channel assignment) 8 (for single-channel assignment)	4 (for two-channel assignment) 8 (for single-channel assignment)
Maximum output current per channel		2 A	2 A
Protective circuit		Overload protection, short-circuit protection of outputs	Overload protection, short-circuit protection of outputs
SafetyBridge properties			
Connection to I/O modules		max. 5 (safe digital I/O modules)	max. 16 (safe digital I/O modules)
Logic memory		24 kByte	60 kByte
General data			
Connection method		Spring-cage connection	Spring-cage connection
Connection data rigid / flexible / AWG		0.2 ... 1.5 mm² / 0.2 ... 1.5 mm² / 24 - 16	0.2 ... 1.5 mm² / 0.2 ... 1.5 mm² / 24 - 16
Dimensions	W / H / D	48.8 mm / 119.8 mm / 71.5 mm	48.8 mm / 119.8 mm / 71.5 mm
Ambient temperature (operation)		-25°C ... 55°C	-25°C ... 55°C
EMC note		Class A product, see page 527	Class A product, see page 527

	Ordering data			Ordering data		
Description	Type	Order No.	Pcs./Pkt.	Type	Order No.	Pcs./Pkt.
Safety-related digital logic module						
- Connection to max. 5 safe input/output modules	**IB IL 24 LPSDO 8 V2-PAC**	2700606	1	**IB IL 24 LPSDO 8 V3-PAC**	2701625	1
	Accessories			**Accessories**		
Connector set, consisting of four Inline connectors with integrated discharge electronics	**IB IL 24 PSDO 8-PLSET/CP/R**	2700722	1	**IB IL 24 PSDO 8-PLSET/CP/R**	2700722	1
Configuration software for SafetyBridge and PSR-TRISAFE modules, can be downloaded free of charge at phoenixcontact.net/products	**SAFECONF**	2986119	1	**SAFECONF**	2986119	1
Starter kit, including ILC 130 ETH, LPSDO and PSDI SafetyBridge modules, control panel, power supply unit, plus accessories with preconfigured safety application	**ILC 130 SBT V2 STARTERKIT**	2700993	1			
Zack marker strip, flat (see Catalog 3)	**ZBF 6...**			**ZBF 6...**		

Safe I/Os for Inline

The safe I/O modules can be used universally. The modules can be used in INTERBUS-Safety systems, PROFIsafe systems via PROFIBUS or PROFINET, and SafetyBridge systems.

The product range comprises safe input modules, output modules (positive and positive/negative switching), floating switching output modules with integrated relay contacts, as well as an Inline ECO safety module with two sensor circuits for safety-related shutdown of the segment voltage.

An Inline station can be made up of safe and standard modules here, whereby a variety of function terminals are available to the user. The station is configured with high granularity with digital and analog inputs or outputs.

Within the relevant safety system, safety functions can be implemented in accordance with the following requirements:
– Up to Cat. 4/PL e in accordance with EN ISO 13849-1, SILCL 3 in accordance with IEC 62061, SIL 3 in accordance with IEC 61508

Digital input module, 16 inputs

Technical data

Local bus interface		
Connection method		Inline data jumper
Transmission speed		500 kbps / 2 Mbps (can be switched)
Power supply for module electronics		
Main circuit supply U_M		24 V DC
Supply voltage range U_M		19.2 V DC ... 30 V DC (including all tolerances, including ripple)
Digital inputs		
Connection technology		2-, 3-conductor
Number of inputs		8 (for two-channel assignment) 16 (for single-channel assignment)
Digital outputs		
Connection technology		-
Number of outputs		- -
Maximum output current per channel		-
Protective circuit		-
General data		
Dimensions	W / H / D	48.8 mm / 141 mm / 71.5 mm
Ambient temperature (operation)		-25°C ... 55°C
EMC note		Class A product, see page 527

Ordering data

Description	Type	Order No.	Pcs./Pkt.
Failsafe digital input module			
	IB IL 24 PSDI 16-PAC	**2700994**	1
Failsafe digital output module - 8 outputs - 4 outputs, +/- switching			

Accessories

Connector set, consisting of four Inline connectors with integrated discharge electronics			
Zack marker strip, flat (see Catalog 3)	**ZBF 6...**		

Digital input module, 8 inputs

Digital output module

Digital output module, +/- switching

Technical data

Inline data jumper 500 kbps / 2 Mbps (can be switched)	Inline data jumper 500 kbps / 2 Mbps (can be switched)
24 V DC 19.2 V DC ... 30 V DC (including all tolerances, including ripple)	24 V DC 19.2 V DC ... 30 V DC (including all tolerances, including ripple)
2-, 3-, 4-conductor 4 (for two-channel assignment) 8 (for single-channel assignment)	- - -
- - - - -	2-, 3-conductor 4 (for two-channel assignment) 8 (for single-channel assignment) 2 A Overload protection, short-circuit protection of outputs
48.8 mm / 119.8 mm / 71.5 mm -25°C ... 55°C Class A product, see page 527	48.8 mm / 119.8 mm / 71.5 mm -25°C ... 55°C Class A product, see page 527

Ordering data

Type	Order No.	Pcs./Pkt.
IB IL 24 PSDI 8-PAC	2985688	1

Accessories

IB IL 24 PSDI 8-PLSET/CP/R	2700720	1
ZBF 6...		

Technical data

Inline data jumper 500 kbps / 2 Mbps (can be switched)
24 V DC 19.2 V DC ... 30 V DC (including all tolerances, including ripple)
- - -
2-, 3-conductor 4 (for two-channel assignment) 8 (for single-channel assignment) 2 A Overload protection, short-circuit protection of outputs
48.8 mm / 119.8 mm / 71.5 mm -25°C ... 55°C Class A product, see page 527

Ordering data

Type	Order No.	Pcs./Pkt.
IB IL 24 PSDO 8-PAC	2985631	1

Accessories

IB IL 24 PSDO 8-PLSET/CP/R	2700722	1
ZBF 6...		

Technical data

Inline data jumper 500 kbps / 2 Mbps (can be switched)
24 V DC 19.2 V DC ... 30 V DC (including all tolerances, including ripple)
- - -
2-, 3-conductor 4 (for two-channel assignment, +/- switching) 4 (for single-channel assignment, + switching) 2 A Overload protection, short-circuit protection of outputs
48.8 mm / 119.8 mm / 71.5 mm -25°C ... 55°C Class A product, see page 527

Ordering data

Type	Order No.	Pcs./Pkt.
IB IL 24 PSDO 4/4-PAC	2916493	1

Accessories

IB IL 24 PSDO 4/4-PLSET/CP/R	2700721	1
ZBF 6...		

Safe I/Os for Inline

Within the relevant safety system, safety functions can be implemented in accordance with the following requirements:
– Up to Cat. 4/PL e in accordance with EN ISO 13849-1, SILCL 3 in accordance with IEC 62061, SIL 3 in accordance with IEC 61508

Relay output module

Inline ECO safety module with two sensor circuits

		Technical data	Technical data
Local bus interface			
Connection method		Inline data jumper	Inline data jumper
Transmission speed		500 kbps / 2 Mbps (can be switched)	500 kbps
Power supply for module electronics			
Main circuit supply U_M		24 V DC	24 V DC -20% / +15%
Supply voltage range U_M		19.2 V DC ... 30 V DC (including all tolerances, including ripple)	-
Digital inputs			
Number of inputs		-	4 (for 2 sensor circuits (1- or 2-channel, non-equivalent/equivalent))
Relay outputs			
Number of outputs		4 (safety relays with 2 floating contacts each)	1 (internal, two-channel enabling current path)
Limiting continuous current		4 A	6 A (observe derating)
Switching current		min. 5 mA max. 4 A	min. 3 mA max. 6 A (30 V DC)
Switching capacity		min. 60 mW	min. 60 mW
General data			
Dimensions	W / H / D	73.2 mm / 119.8 mm / 71.5 mm	24.4 mm / 119.8 mm / 71.5 mm
Ambient temperature (operation)		-25°C ... 55°C	0°C ... 55°C (observe derating)
EMC note		Class A product, see page 527	

Description	Ordering data: Type	Order No.	Pcs./Pkt.	Ordering data: Type	Order No.	Pcs./Pkt.
Failsafe relay output module						
- 4 outputs	**IB IL 24 PSDOR 4-PAC**	2985864	1			
Inline ECO safety module						
				IB IL SAFE 2-ECO	2702446	1

Logic module

The safety module is an output module from the Axioline F product range with integrated safety logic for use in a SafetyBridge Technology V3 system.

The logic module can be used as part of an Axioline F station at any point within an EtherCAT®, EtherNet/IP™, Sercos, Modbus, PROFINET or PROFIBUS system.

Features:

– Generation and monitoring of the SafetyBridge protocol
– Processing of the parameterized safety logic
– Control of 8 safe outputs onboard

Depending on the installation and parameterization, you can achieve the following safety characteristics with this module:

– Up to Cat. 4/PL e in accordance with EN ISO 13849-1, SILCL 3 in accordance with IEC 62061, SIL 3 in accordance with IEC 61508

Connection to max. 16 safe input/output modules

Technical data

Local bus interface		
Designation		Axioline F local bus
Connection method		Bus base module
Power supply for module electronics		
Communications power U_{Bus}		5 V DC (via bus base module)
Current consumption from U_{Bus}		max. 280 mA
I/O supply		
Supply of digital output modules U_O		24 V DC
Supply voltage range U_O		19.2 V DC ... 30.2 V DC (including all tolerances, including ripple)
Current consumption from U_O		typ. 25 mA (all outputs set; power supply from U_O with 30.2 V DC; without power supply to the actuator)
Protective circuit		Protection against polarity reversal, EMC protective circuit, undervoltage detection
Digital outputs		
Connection technology		2-, 3-conductor
Number of outputs		4 (for two-channel assignment) 8 (for single-channel assignment)
Output current		max. 2 A (per channel)
Maximum output current per module / terminal block		8 A
Protective circuit		Overload protection, freewheeling circuit for inductive loads, Discharge circuit for accelerated discharge of capacitive loads
SafetyBridge properties		
Connection to I/O modules		max. 16 (safe digital I/O modules)
Logic memory		30 kByte
General data		
Connection method		Push-in connection
Connection data rigid / flexible / AWG		0.2 ... 1.5 mm² / 0.2 ... 1.5 mm² / 24 - 16
Weight		220 g
Dimensions	W / H / D	53.6 mm / 126.1 mm / 54 mm
Ambient temperature (operation)		-35°C ... 60°C (mounting position: any)

Ordering data

Description	Type	Order No.	Pcs./Pkt.
Safety-related digital logic module			
- Connection to a maximum of 16 safe I/O modules	**AXL F LPSDO8/3 1F**	2702171	1

Safe I/Os for Axioline F

You can install the safety-related I/O modules from the Axioline F product family for PROFIsafe and SafetyBridge anywhere inside an Axioline station. In addition to standard signals, this means you can now also read and output safe signals in the Axioline system.

Depending on the installation and parameterization, you can achieve the following safety characteristics with these modules:

– Up to Cat. 4/PL e in accordance with EN ISO 13849-1, SILCL 3 in accordance with IEC 62061, SIL 3 in accordance with IEC 61508

Digital input module

Technical data

Local bus interface		
Designation		Axioline F local bus
Connection method		Bus base module
Power supply for module electronics		
Communications power U_{Bus}		5 V DC (via bus base module)
Current consumption from U_{Bus}		max. 310 mA
I/O supply		
Supply of digital input modules U_I		24 V DC
Supply voltage range U_I		19.2 V DC ... 30.2 V DC (including all tolerances, including ripple)
Current consumption from U_I		typ. 9 mA (all inputs set; power supply from U_I with 30.2 V DC; without power supply to the sensors via clock supplies T1 and T2)
Supply of digital output modules U_O		-
Supply voltage range U_O		-
Current consumption from U_O		-
Protective circuit		Protection against polarity reversal, EMC protective circuit, undervoltage detection
Digital inputs		
Connection technology		2-, 3-, 4-conductor
Number of inputs		4 (for two-channel assignment) 8 (for single-channel assignment)
Description of the inputs		IEC 61131-2 type 3
Nominal input voltage U_{IN}		24 V DC
Nominal input current at U_{IN}		typ. 4.2 mA
Input filter time		1.5 ms / 3 ms (default) / 5 ms / 15 ms
Digital outputs		
Connection technology		-
Number of outputs		- -
Output voltage		-
Output current		-
Maximum output current per module / terminal block		-
Behavior in the event of overload		-
Protective circuit		-
General data		
Connection method		Push-in connection
Connection data rigid / flexible / AWG		0.2 ... 1.5 mm² / 0.2 ... 1.5 mm² / 24 - 16
Weight		220 g
Dimensions	W / H / D	53.6 mm / 126.1 mm / 54 mm
Ambient temperature (operation)		-35°C ... 60°C (mounting position: any)

Ordering data

Description	Type	Order No.	Pcs./Pkt.
Safety-related I/O module - For SafetyBridge	**AXL F SSDI8/4 1F**	2702263	1
Safety-related I/O module - For PROFIsafe	**AXL F PSDI8/4 1F**	2701559	1

Digital output module

Technical data

	Axioline F local bus Bus base module
	5 V DC (via bus base module) max. 280 mA
	- - -
	24 V DC 19.2 V DC ... 30.2 V DC (including all tolerances, including ripple) typ. 25 mA (all outputs set; power supply from U_O with 30.2 V DC; without power supply to the actuator) Protection against polarity reversal, EMC protective circuit, undervoltage detection
	- - - - - - -
	2-, 3-conductor 4 (for two-channel assignment) 8 (for single-channel assignment) 24 V DC max. 2 A (per channel) 8 A Affected output is disabled and a diagnostic message is generated. Overload protection, freewheeling circuit for inductive loads, Discharge circuit for accelerated discharge of capacitive loads
	Push-in connection 0.2 ... 1.5 mm^2 / 0.2 ... 1.5 mm^2 / 24 - 16 220 g 53.6 mm / 126.1 mm / 54 mm -35°C ... 60°C (mounting position: any)

Ordering data

Type	Order No.	Pcs./Pkt.
AXL F SSDO8/3 1F	**2702264**	1
AXL F PSDO8/3 1F	**2701560**	1

Safe I/Os for Axioline E

Acquire safety-related input and output data directly in your systems and machines, without the need for a control cabinet or junction box. The safety module from the Axioline E product family is suitable for use in PROFIsafe and SafetyBridge systems.

The module is an IO-Link device. When used in conjunction with the IO-Link masters from the Axioline E product family, you can integrate the module into the relevant higher-level network.

Within the relevant safety system, safety functions can be implemented in accordance with the following requirements:

– Up to Cat. 4/PL e in accordance with EN ISO 13849-1, SILCL 3 in accordance with IEC 62061, SIL 3 in accordance with IEC 61508

IO-Link

PL EN ISO 13849

SILCL IEC 62061

8 digital inputs and 8 digital outputs

Technical data

Power supply for module electronics		
Supply voltage		24 V DC
Supply voltage range		19.2 V DC ... 30.2 V DC (including all tolerances, including ripple)
Connection method		M12 connector (T-coded)
Digital inputs		
Connection method		M12 connector, double occupancy
Connection technology		3-conductor
Number of inputs		4 (for two-channel assignment) 8 (for single-channel assignment)
Description of the inputs		IEC 61131-2 type 3
Input filter time		1.5 ms / 3 ms (default) / 5 ms / 15 ms
Protective circuit		Overload protection, short-circuit protection of sensor supply
Digital outputs		
Connection method		M12 connector
Connection technology		3-conductor
Number of outputs		4 (for two-channel assignment, +/- switching) 4 (for single-channel assignment, + switching)
Maximum output current per channel		2 A
Protective circuit		Overload protection, short-circuit protection of outputs
IO-Link ports		
Connection method		M12 connector, A-coded
Connection technology		3-conductor
Number of ports		1 (Class B)
IO-Link port supply L+		
Nominal voltage for I/O supply		24 V DC (is provided via the IO-Link interface of the IO-Link master.)
General data		
Weight		350 g
Drill hole spacing		201 mm
Dimensions	W / H / D	60 mm / 214 mm / 30 mm
Degree of protection		IP65/IP67
Ambient temperature (operation)		-25°C ... 60°C

Ordering data

Description	Type	Order No.	Pcs./Pkt.
Safety-related I/O module			
	AXL E IOL SDI8 SDO4 2A M12 6P	**2702833**	1

Safe PROFINET gateway

The safe PROFINET gateway from Phoenix Contact enables safe communication between two PROFINET networks. This means that you can implement system-wide and manufacturer-independent functional safety, such as emergency stop concepts.

Your advantages:
- Coupling of two PROFINET systems
- Transmission of standard I/O data via PROFINET
- Transmission of safe I/O data via PROFIsafe
- Redundant power supply
- Controller-independent

Within a PROFIsafe system, the safety functions associated with the following requirements are supported:
- SIL 3 in accordance with IEC 61508
- SILCL 3 in accordance with IEC 61508
- PL e in accordance with EN ISO 13849-1

Safe PROFINET gateway

Technical data

Supply		
Supply voltage		24 V DC
Supply voltage range		18.5 V DC ... 30 V DC (including ripple)
Current consumption		max. 250 mA
Programming data		
IN and OUT process data		128 Byte (2 - 11 bytes of safe IO process data)
General data		
Weight		550 g
Dimensions	W / H / D	130 mm / 27 mm / 145 mm
Ambient temperature (operation)		-25°C ... 60°C
EMC note		Class A product, see page 527

Ordering data

Description	Type	Order No.	Pcs./Pkt.
Safe **PROFINET gateway**	**FL PN/PN SDIO-2TX/2TX**	2700651	1

Accessories

Color marking for FL CAT... Patch...			
- Blue	**FL PATCH CCODE BU**	2891291	20
- Red	**FL PATCH CCODE RD**	2891893	20
Lockable security element for FL Patch...	**FL PATCH GUARD**	2891424	20
Key for FL PATCH GUARD	**FL PATCH GUARD KEY**	2891521	1
Security element for FL CAT ...Patch...	**FL PATCH SAFE CLIP**	2891246	20

High-performance safety PLC

The RFC 4072S is the first high-performance controller based on PLCnext Technology. Use in applications with the highest safety requirements in accordance with SIL 3 or PL e is also possible. With PLCnext Engineer, standard and safety programming can be performed in a single engineering tool.

Your advantages:
- PLCnext Technology: preferred programming languages and programming environments, open-source software, apps, Proficloud, and also coming soon PLCnext Store with real-time execution
- Safety: maximum safety of machinery, thanks to diversified processors and support for up to 300 PROFIsafe devices
- Performance: the use of an Intel® Core™ i5 Dual Core processor and two powerful processors based on Arm architecture enables one of the best performance capabilities on the market

Additional features:
- PROFINET controller and device
- Support for PROFIsafe profile V2.6.1
- M2M system networking with OPC UA
- Communication in up to three separate subnets
- Convenient operation via the touch display

The RFC 4072S is able to satisfy the following requirements in safety-related applications:
- SIL 3 in accordance with IEC 61508
- PL e in accordance with EN ISO 13849-1

High-performance safety PLC with PLCnext Technology

Technical data

Interfaces		
Ethernet		4 x RJ45 socket
USB 2.0		1 x USB type A, male connector
PROFINET master		
Number of supported devices		max. 256
IEC 61131 runtime system		
Processor		Intel® Core™ i5-6300U 2x 2.4 GHz (Standard) Arm® Cortex®-A9 800 MHz (Safety) Arm® Cortex®-A8 600 MHz (Safety)
Program memory		16 Mbyte
Mass storage		32 Mbyte
Retentive mass storage		2 Mbyte
Real-time clock		Integrated (battery backup)
Power supply		
Power supply connection		Screw terminal blocks, plug-in
Supply voltage		24 V DC
Supply voltage range		19.2 V DC ... 30 V DC (including ripple)
Typical current consumption		1 A
General data		
Dimensions	W / H / D	122 mm / 182 mm / 173 mm
Degree of protection		IP20
Ambient temperature (operation)		0°C ... 55°C (from 40°C only with fan module)

Ordering data

Description	Type	Order No.	Pcs./Pkt.
Safety controller			
	RFC 4072S	1051328	1

Accessories

Program and configuration memory, Flash card for storing application programs and other files in the PLC file system	**SD FLASH 2GB PLCNEXT MEMORY**	1043501	1
Fan module for Remote Field Controller	**RFC FAN MODULE**	2404085	1
Engineering software	**PLCnext Engineer (see page 14)**		

Safe PROFIsafe controller

Thanks to the use of powerful processors, the RFC 480S PN 4TX safety controller delivers high performance in the portfolio. You can integrate the latest safety devices using PROFIsafe profile V2.6.1. The OPC UA server enables modern communication with higher-level SCADA systems.

Your advantages:

- Safety: maximum safety of machinery, thanks to diversified processors and support for up to 300 PROFIsafe devices
- Performance: the use of an Intel® Core™ i5 Dual Core processor and two powerful processors based on Arm architecture enables one of the best performance capabilities on the market

Additional features:

- PROFINET controller and device
- Support for PROFIsafe profile V2.6.1
- M2M system networking with OPC UA
- Communication in up to three separate subnets
- Convenient operation via the touch display

Depending on the parameterization of the I/O modules and the programming, the RFC 480S can meet the following requirements:

- SIL 3 in accordance with IEC 61508
- PL e in accordance with EN ISO 13849-1

Class 400 compact controller with integrated safety controller

Technical data

Interfaces		
Ethernet		4 x RJ45 socket
PROFINET master		
Number of supported devices		max. 256
IEC 61131 runtime system		
Processor		Intel® Core™ i5-6300U 2x 2.4 GHz (Dual-Core) Arm® Cortex®-A9 800 MHz (Safety) Arm® Cortex®-A8 600 MHz (Safety)
Program memory		typ. 16 Mbyte
Mass storage		32 Mbyte
Retentive mass storage		2 Mbyte
Real-time clock		Integrated (battery backup)
Power supply		
Power supply connection		Screw terminal blocks, plug-in
Supply voltage		24 V DC
Supply voltage range		19.2 V DC ... 30 V DC (including ripple)
Typical current consumption		1 A
General data		
Dimensions	W / H / D	122 mm / 182 mm / 173 mm
Degree of protection		IP20
Ambient temperature (operation)		0°C ... 55°C (from 40°C only with fan module)
EMC note		Class A product, see page 527

Ordering data

Description	Type	Order No.	Pcs./Pkt.
Remote Field Controller - 4 x 10/100/1000 Ethernet, PROFINET controller	**RFC 480S PN 4TX**	2404577	1

Accessories

Program and configuration memory, plug-in			
- 512 MB	**SD FLASH 512MB**	2988146	1
- 2 GB	**SD FLASH 2GB**	2988162	1
Fan module for Remote Field Controller	**RFC FAN MODULE**	2404085	1
AX OPC SERVER, communication interface for OPC-compatible visualization with PC Worx-based controllers - ILC 1x1, AXC 1xxx, ILC 3xx, AXC 3xxx, RFC 4xx, PC WORX RT BASIC/SRT	**AX OPC SERVER**	2985945	1
SAFETYPROG programming software			
- Basic	**SAFETYPROG BASIC**	2700443	1
- Advanced	**SAFETYPROG ADVANCED**	2700441	1
- Professional	**SAFETYPROG PROFESSIONAL**	2700442	1
Engineering software	**PC WORX ... (see "Software" section)**		

Control solution for functional safety

Safety solution for Inline

With the Easy Safe safety solution, in combination with the ILC 151 ETH or AXC 1050 controllers, you can quickly and easily integrate safe I/O modules into your machine. All the necessary configuration settings and initializations for the integration of SafetyBridge I/O modules in your standard application are applied automatically.

Your advantages:

- Easy safety-related programming by means of pre-configured software application
- Quick configuration, thanks to user-friendly web interface
- Comprehensive communication options, thanks to Modbus and PROFINET connection (PRO version)
- Always informed, thanks to notification function via e-mail (PRO version)

Additional features:

- Graphical interface
- Safety logic using drag and drop
- License key and user program

Technical data

Interfaces		
Designation		INTERBUS local bus (master)
Connection method		Inline data jumper
Ethernet		1 x RJ45 socket
Parameterization/operation/diagnostics		1 x 6-pos. MINI DIN socket (PS/2)
System limits		
Number of devices with parameter channel		max. 16
Number of supported devices		max. 128
Amount of process data		max. 4096 Bit (INTERBUS) max. 16384 Bit (internal Modbus /TCP client)
Digital inputs/outputs		
Number of inputs		8
Number of outputs		4
IEC 61131 runtime system		
Programming tool		PC WORX PC WORX EXPRESS
Processor		Altera Nios II 64 MHz
Program memory		256 kByte
Mass storage		256 kByte
Retentive mass storage		8 kByte (NVRAM)
Number of data blocks		depends on mass storage
Number of timers, counters		depends on mass storage
Number of control tasks		8
Real-time clock		Yes
Power supply		
Supply voltage		24 V DC
Supply voltage range		19.2 V DC ... 30 V DC
Typical current consumption		210 mA
General data		
Dimensions	W / H / D	80 mm / 119.8 mm / 71.5 mm
Degree of protection		IP20
Ambient temperature (operation)		-25°C ... 55°C
EMC note		Class A product, see page 527

Ordering data

Description	Type	Order No.	Pcs./Pkt.
Compact controller, complete with accessories (connector and marking field)	**ILC 151 ETH**	2700974	1
Program and configuration memory, Flash card with license key and user program for easy web-based configuration and startup of a SafetyBridge solution			
- 2 GB, for Inline	**SD FLASH 2GB EASY SAFE BASIC**	2403297	1
- 2 GB, for Inline including communication via Modbus/TCP, PROFINET, and e-mail	**SD FLASH 2GB EASY SAFE PRO**	2403298	1
- 2 GB, for Axioline including communication via Modbus/TCP, PROFINET, and e-mail			

Safety solution for Axioline PRO version

Technical data

Axioline F local bus
Bus base module
2 x RJ45 socket
1 x Micro USB type B
-
max. 63 (per station)
max. 4096 Bit (Axioline F local bus (input))
max. 4096 Bit (Axioline F local bus (output))
max. 32768 Bit (internal Modbus /TCP client)
-
-
PC WORX
PC WORX EXPRESS
Altera Nios II 1x 100 MHz
2 Mbyte
2 Mbyte
48 kByte (NVRAM)
depends on mass storage
depends on mass storage
8
Yes
24 V DC
19.2 V DC ... 30 V DC
125 mA
45 mm / 125.9 mm / 74 mm
IP20
-25°C ... 60°C
Class A product, see page 527

Ordering data

Type	Order No.	Pcs./Pkt.
AXC 1050	**2700988**	1
SD FLASH 2GB AXC EASY SAFE PRO	**2403730**	1

Configuration software

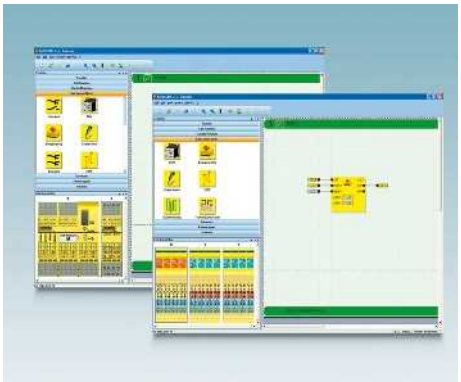

SAFECONF

The software implements the consistent configuration of the safety function and the parameterization of the safe SafetyBridge and PSR-TRISAFE modules.

Instead of being programmed, the required functions and components are simply dragged to the connection editor, where they can be linked. It takes just three steps to create a project, test it, and transfer it to the safety module.

When using SafetyBridge modules, you can create the safe configuration independently of the controller and automation network used.

– Maximum flexibility, thanks to the wide range of driver interfaces for leading controller manufacturers

PSR-CONF-WIN

The PSR-CONF-WIN configuration package is used to parameterize the PSR-RSM4 safe zero-speed and over-speed safety relay.

Application-related safety parameters such as zero-speed and speed limits can be set in the software. The data is then transferred to the safety relay module.

PSRmotion software

Application-related parameters for the PSR-MM30 safe zero-speed and over-speed safety relay can be set and downloaded using the PSRmotion configuration software.

The software's online monitoring function enables you to visualize the data for the monitored movement during operation.

The PSRmotion configuration software can be downloaded free of charge online at phoenixcontact.net/products under Download on the product page for the PSR-MM30 zero-speed and over-speed safety relay.

Configuration software for PSR-TRISAFE and SafetyBridge modules

Configuration software and connecting cable

	Technical data	Technical data
Hardware requirements		
Processor	Pentium, 2 GHz (recommended), 1 GHz (min.)	Pentium, 2 GHz (recommended), 1 GHz (min.)
Main memory (RAM)	2 GByte (under Windows 7 / Windows 8: 1 GByte (min.) under Windows XP 512 Mbytes (min.))	1 GByte (under Windows 7 / under Windows XP: 512 Mbytes (min.))
Hard disk memory	min. 250 Mbyte (free hard disk memory space)	min. 250 Mbyte (free hard disk memory space)
Optical drive	CD-ROM	CD-ROM
Operating equipment	Keyboard, mouse	Keyboard, mouse
Monitor resolution	800x600	800x600
Software requirements		
Operating system	Windows® 7 Professional SP1 (32-Bit/64-Bit) / Windows® 8 (32 bit/64 bit) / MS Windows XP (SP3) Multi-Language	Windows® 7 (32-Bit/64-Bit) / Windows XP / MS Windows NT 4.0 with Service Pack > 4, MS Windows 2000 and MS Windows XP
Supported browsers	Internet Explorer 6 or higher	-
Basic functions		
	Configuration software for PSR-TRISAFE and SafetyBridge technology	Configuration software for PSR-RSM4 safe zero-speed and over-speed safety relay
Languages supported		
	German, English, French, Spanish, Italian	German, English, French, Spanish, Italian

	Ordering data			Ordering data		
Description	Type	Order No.	Pcs./Pkt.	Type	Order No.	Pcs./Pkt.
Configuration software for SafetyBridge and PSR-TRISAFE modules, can be downloaded free of charge at phoenixcontact.net/products	SAFECONF	2986119	1			
Configuration software for parameterizing the PSR-RSM4 safe zero-speed and over-speed safety relay, with programming cable				PSR-CONF-WIN1.0	2981554	1

SAFETYPROG – Programming software

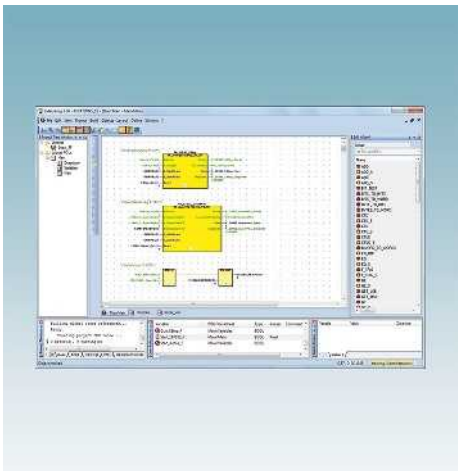

SafetyProg can be used to develop safe applications with safety controllers – using PROFIsafe networks.

The TÜV-certified programming tool guides you through the various development phases of a safety application:

- IEC 61131-compliant programming in function block diagram (FBD), ladder diagram (LD), and structured text (ST)
- Compiling the project
- Sending the project to the safety controller
- Controlling the safety controller, e.g., start, stop or reset
- Performing function tests
- Monitoring the safety controller and debugging the safety application
- Project documentation
- Printing project documentation

SAFETYPROG contains a comprehensive library with 20 certified function blocks for safety technology, all in accordance with PLCopen safety specification 1.0.

Useful tools

SAFETYPROG offers many innovative tools, which enable you to integrate functional safety in your automation system:

- User management
- Bus configuration project for importing process and diagnostic data
- Bus navigator
- Code editor and Edit wizard
- Coupling of safe and standard PLC
- Project tree
- Cross-reference and message windows
- Controller simulation
- Variable editor

Notes:

Further information on the safe PROFIsafe controller can be found on page 275

Programming software for PROFIsafe controllers

Functional safety

Ordering data

Description	Type	Order No.	Pcs./Pkt.
Programming software for PROFIsafe controllers, with graphical user interface in accordance with IEC 61131-3 in function block diagram (FBD) and ladder diagram (LD). **One library** from the corresponding **PLCopen libraries** can be used per project.	**SAFETYPROG BASIC**	2700443	1
Programming software for PROFIsafe controllers, with graphical user interface in accordance with IEC 61131-3 in function block diagram (FBD) and ladder diagram (LD). **Three of the libraries** from the corresponding **PLCopen libraries** can be used per project.	**SAFETYPROG ADVANCED**	2700441	1
Programming software for PROFIsafe controllers, with graphical user interface in accordance with IEC 61131-3 in function block diagram (FBD) and ladder diagram (LD). **All of the libraries** from the corresponding **PLCopen libraries** can be used per project.	**SAFETYPROG PROFESSIONAL**	2700442	1

Safe analog value processing

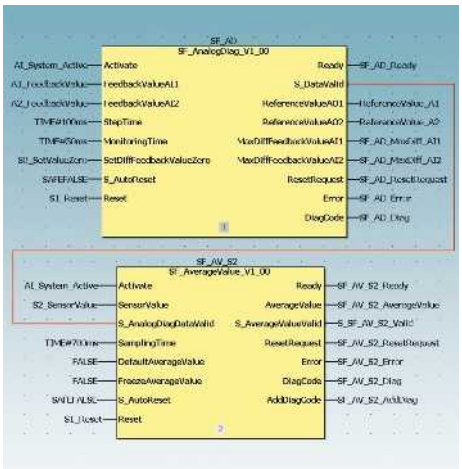

Function block library for safety-related analog value acquisition with standard I/O modules.

Please contact the safety hotline before ordering **SAFE AI**.

24-hour safety hotline
+49 5281 9-462777
safety-service@phoenixcontact.com

Wherever analog values need to be processed in a safety-related manner, the Safe AI solution package from Phoenix Contact is the ideal solution. With this TÜV-certified and software-based analog value processing, no safety-related I/O modules are required. This saves you money and offers flexibility.

Components of the Safe AI solution package:
- Initial application advice via telephone on the required software and hardware components
- License key for using the ANALOGINPUT_SF function block library including user documentation
- Advice from the Competence Center Safety in the form of a web meeting

Ordering data

Description	Type	Order No.	Pcs./Pkt.
Function block library for safety-related analog acquisition with standard I/O modules	**SAFE AI**	2400057	1

Safety lifecycle

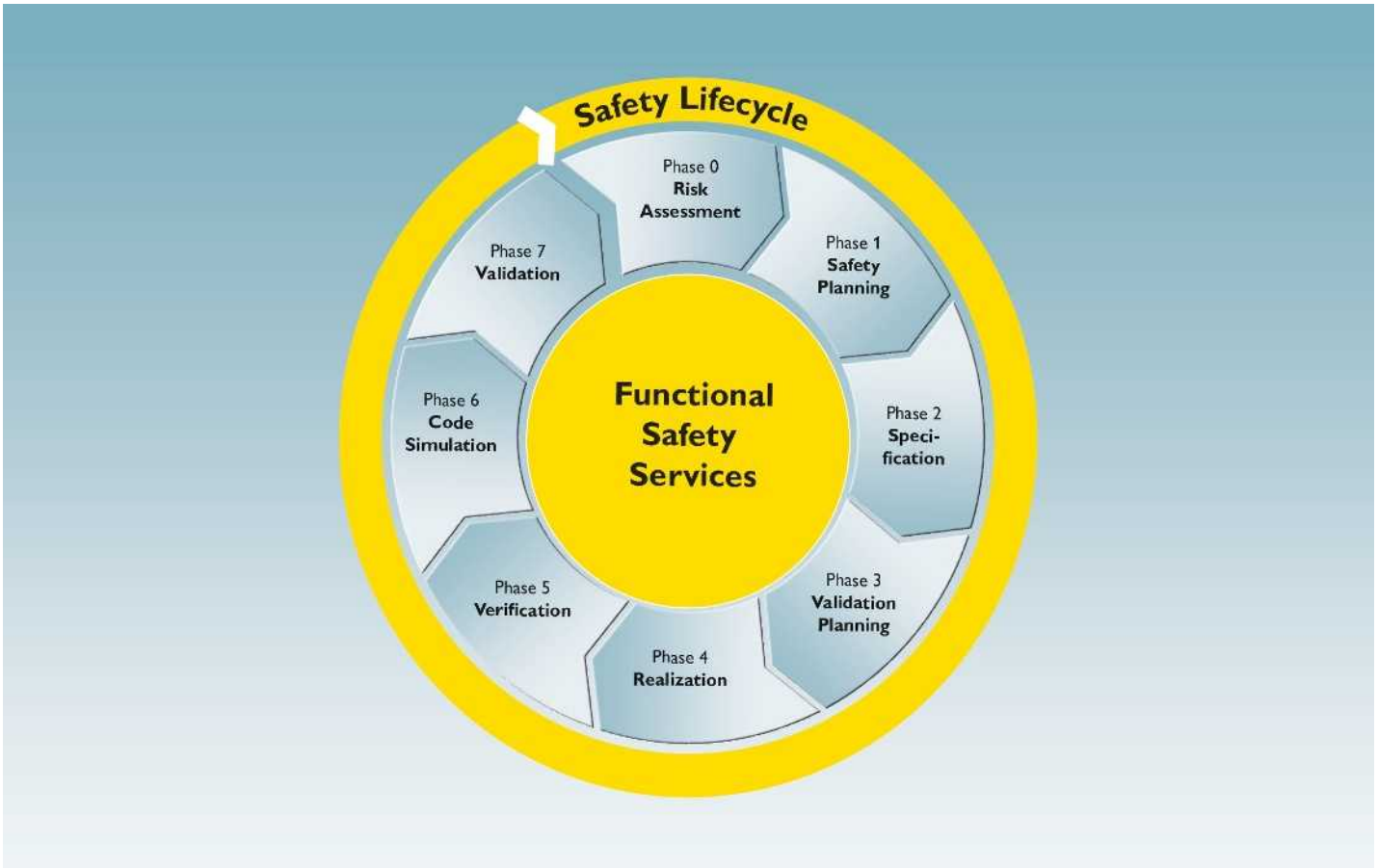

Safety lifecycle for machinery

Our measures are based on the safety lifecycle for machinery, as per EN ISO 13849, EN 62061, and, for process technology, EN 61511.

Your advantage:

We provide consistent and traceable support that can be planned for the implementation of your safety-related requirements.

Machine operators

We support you in tasks relating to the Ordinance on Industrial Safety and Health applicable in Germany, hazard assessment, and the safe provision of equipment.

When you, as a machine operator, make changes to your machinery, your role may possibly change to that of a machine manufacturer.

Machine manufacturers

We support you in tasks compliant with the Machinery Directive, EMC Directive, Low Voltage Directive, and for CE declaration of conformity applicable in Europe.

We design the process based on the safety lifecycle for machinery from phase 0 to phase 7.

System integrators

We support you in tasks compliant with EN ISO 13849, EN 62061, the European EMC Directive, and the Low Voltage Directive, as well as the use of the SISTEMA software utility.

We design the process based on the safety lifecycle for machinery from phase 2 to phase 7.

24-hour safety hotline

If queries arise when selecting products or during startup and operation, in addition to your local specialists you can also contact our free 24-hour safety hotline at any time:
+49 (0) 5281 9 46 2777

Or send us an e-mail:
safety-service@phoenixcontact.com

Additional information:

For detailed information regarding our range of services for the safety of machinery and systems, use the web code.

Your web code: #1075

Service and support

We will support you in all aspects regarding the safety of machinery with our flexible range of services. Choose between industry-specific services for the safety of machines and systems or services for safety in the process industry.

Our certified safety experts will be happy to advise you and support you during the necessary work steps and in the creation of the verification documentation.

Contact:
services@phoenixcontact.com

Consultation

We provide advice on various subjects in the planning and implementation of your system:

– Design of the safety lifecycle: standards and their implementation
– Machinery Directive
– Retrofitting of machines and systems

Engineering

To assess the safety integrity, we determine the PL (performance level) or SIL (safety integrity level) of the safety functions with the help of your technical documentation. These must be sufficiently robust to withstand random errors.

In the case of Machinery Directive requirements, we implement the entire safety lifecycle process, from the risk assessment all the way through to the instructions for use.

Product support

We provide support for any questions you may have regarding Phoenix Contact safety hardware and software. You can contact our support team about anything – from a preliminary clarification of the technical aspects, through planning and implementation, to operation.

Seminars

We provide instruction and practical training that is tailored to your individual requirements, such as:

Safety application software:

– Requirements for safety-related software
– Specification of safety requirements and software
– Implementation of safety functions
– Development of function blocks

FS Technician:

– Information regarding the requirements of the Machinery Directive and those of harmonized standards
– Practical implementation of technical and normative requirements regarding functional safety
– TÜV Rheinland certificate upon completion

PHOENIX CONTACT
X9
P1 Stat Mod Sig
P2 Err Fault Info
X1 WAN
X2 LAN
X6 Configuration
mGuard rs2000
US1
US2
FAIL
MODE
BF SF
XF 1
XF 2
XF 3
XF 4
XF 5
XF 6
XF 7
XF 8
1 2 3 4 5
P1
P3
P2
P4
E1
E2
LNK
ACT
STATUS
2702763
GW DEVICE SERVER 2E/4DB9

Industrial communication technology – Industrial Ethernet

Make the most of all the options offered by your Ethernet network.

Phoenix Contact offers you more real time, more wireless, more safety, and more reliability.
Industrial Ethernet from Phoenix Contact can be easily integrated into your automation infrastructure – because we make Ethernet easy.

Benefit from our experience in automation which spans decades and the experience we have gained in industrial Ethernet networks over the past ten plus years.
We know and understand the expectations and demands placed on automation. This is evident and embodied in our products and solutions.

Product overview **286**

Unmanaged Switches
- Standard switches with basic functions **288**
- Standard switches **291**
- Standard Gigabit switches **294**
- Standard switches with wide temperature range **296**
- Standard switches with flat design **298**
- IP67 switches and switches for 19" rack mounting **300**
- 1000 series Unmanaged Switches **301**

Managed Switches
- 2000 series Managed Switches **304**
- 3000 series Managed Switches **314**
- 4000 series Managed Gigabit Switches **318**
- SMCS series Managed Switches **322**
- PROFINET real-time switches **324**
- 7000 series Managed Switches **326**
- Routers and Layer 3 switches **328**

Switch accessories **330**

Security routers and firewalls
Security routers for DIN rails **334**
Firewall/router for office-based/mobile use **340**

Software for Ethernet networks **342**

Redundancy modules **343**

Power over Ethernet
PoE splitter **344**
PoE injectors **345**

Remote control
Ethernet extenders **348**

Media converters for Ethernet **350**

Serial device servers, gateways, and proxies **354**

Installation technology for Industrial Ethernet
Patch panels **360**
Isolator **364**
Accessories **366**

Wireless Ethernet **372**

Product overview

Unmanaged Switches

Unmanaged Switches with basic functions in IP20
Page 288

Unmanaged Switches with basic functions in IP67
Page 300

Unmanaged Power over Ethernet Switches in IP30 and IP67
Page 302

Managed Switches

2000 series Managed Switches for PROFINET networks
Page 304

3000 series Managed Switches with IT functions
Page 314

4000 series Managed Switches with two Gigabit uplink ports
Page 316

4000 series Managed Power over Ethernet Switches
Page 318

Managed Switches

4000 series Managed Switches for 19" rack mounting
Page 320

SMCS series Managed Switches with a very flat design
Page 322

IRT series Managed Switches for PROFINET real-time applications
Page 324

7000 series Managed Switches for high-availability EtherNet/IP™ networks
Page 326

Routers and Layer 3 switches

2000 series Managed Switches with NAT router functions
Page 328

GHS series Modular Gigabit switches with Layer 3 functions
Page 329

Switch accessories

SFP modules and configuration memory
Page 330

Security routers and firewalls

mGuard security routers for DIN rails
Page 334

mGuard security routers for mounting without a DIN rail
Page 340

Software

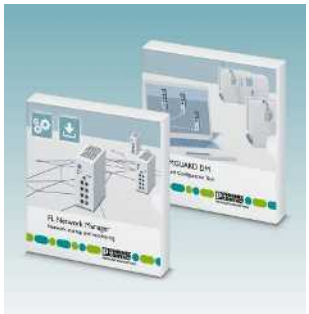

Network management software
Page 342

Redundancy modules

PRP redundancy modules for parallel network redundancy
Page 343

PoE injector

PoE injectors for the common transmission of power and data
Page 344

Ethernet extenders

Managed and unmanaged Ethernet extenders for large IP networks
Page 349

Media converters

Universal media convertors for conversion to fiber optics
Page 350

Media converters for real-time protocols and IEC 61850 environments
Page 352

Serial device servers, gateways, and proxies

Serial device servers and protocol converters, multiport, for conversion to Ethernet
Page 354

Serial device servers, 1 port, for conversion to Ethernet
Page 357

Proxies as a link between PROFINET networks and other fieldbus systems
Page 358

Patch panels

Passive mini patch panels with various connection options
Page 360

Isolator

4 kV isolator for electrical isolation
Page 364

COMPLETE line

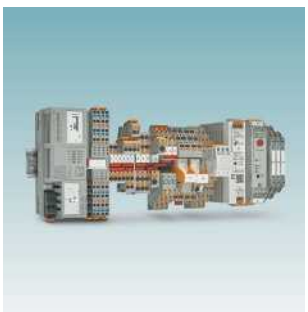

The comprehensive solution for your control cabinet:
Easy planning, intuitive installation
Page 522

Standard switches with basic functions

FL SWITCH SFNB... Unmanaged Switches are designed for simple entry-level applications where low installation costs and a high degree of industrialization are required.

Features:

- 5 to 8 ports in a narrow, metal housing
- Optional SC and ST fiber optic ports
- For longer distances, multimode and single mode fiber connections are available
- RJ45 ports provide 10/100 Mbps speeds; fiber optic ports operate at 100 Mbps
- Auto negotiation and autocrossing simplify installation and setup
- LED indicators provide local diagnostics
- Cable locking security options

5 RJ45 ports

Ex:

Technical data

Ethernet interface		
Number of ports		5 (RJ45 ports)
Transmission speed		10/100 Mbps
Fiber optic interface		
Number of ports		-
Transmission speed		-
Connection method		-
Wavelength		-
Transmission distance		-
Function		
Basic functions		Unmanaged Switch / auto negotiation, complies with IEEE 802.3, store and forward switching mode
Status and diagnostic indicators		LEDs: U_S, link and activity per port
Power supply		
Supply voltage		24 V DC
Residual ripple		3.6 V_{PP}
Supply voltage range		12 V DC ... 48 V DC
Typical current consumption		185 mA (at U_S = 24 V DC)
General data		
Dimensions	W / H / D	28 mm / 110 mm / 70 mm
Degree of protection		IP20
Ambient temperature (operation)		-10°C ... 60°C
Permissible humidity (operation)		5% ... 95% (non-condensing)
Noise emission		EN 61000-6-4
Noise immunity		EN 61000-6-2
EMC note		Class A product, see page 527

Ordering data

Description	Type	Order No.	Pcs./Pkt.
Ethernet switch - 5 RJ45 ports - 8 RJ45 ports - 4 RJ45 ports, 1 SC FO port - 4 RJ45 ports, 1 ST FO port	**FL SWITCH SFNB 5TX**	2891001	1

8 RJ45 ports

Ex:

Technical data

8 (RJ45 ports)
10/100 Mbps

-
-
-
-
-

Unmanaged Switch / auto negotiation, complies with IEEE 802.3, store and forward switching mode

LEDs: U_S, link and activity per port

24 V DC
3.6 V_{PP}
9 V DC ... 32 V DC
140 mA (at U_S = 24 V DC)

50 mm / 110 mm / 70 mm
IP20
-10°C ... 60°C
5% ... 95% (non-condensing)
EN 61000-6-4
EN 61000-6-2:2005
Class A product, see page 527

Ordering data

Type	Order No.	Pcs./Pkt.
FL SWITCH SFNB 8TX	2891002	1

4 RJ45 ports and 1 fiber optic port (multimode)

Ex:

Technical data

FL SWITCH SFNB 4TX/FX	FL SWITCH SFNB 4TX/FX ST

4 (RJ45 ports)
10/100 Mbps

1 (SC multimode) | 1 (ST multimode)
100 Mbps (full duplex)
SC | ST
1310 nm
12.1 km (fiberglass with F-G 62.5/125 0.7 dB/km F1000)

Unmanaged Switch / auto negotiation, complies with IEEE 802.3, store and forward switching mode

LEDs: U_S, link and activity per port

24 V DC
3.6 V_{PP}
12 V DC ... 48 V DC
185 mA (at U_S = 24 V DC) | 175 mA (at U_S = 24 V DC)

28 mm / 110 mm / 70 mm
IP20
0°C ... 60°C | -10°C ... 60°C
5% ... 95% (non-condensing)
EN 61000-6-4
EN 61000-6-2
Class A product, see page 527

Ordering data

Type	Order No.	Pcs./Pkt.
FL SWITCH SFNB 4TX/FX	2891027	1
FL SWITCH SFNB 4TX/FX ST	2891028	1

4 RJ45 ports and 1 fiber optic port (single mode)

Ex:

Technical data

4 (RJ45 ports)
10/100 Mbps

1 (SC single mode)
100 Mbps (full duplex)
SC
1310 nm
25 km (fiberglass with F-G 9/125 0.5 dB/km)

Unmanaged Switch / auto negotiation, complies with IEEE 802.3, store and forward switching mode

LEDs: U_S, link and activity per port

24 V DC
3.6 V_{PP}
12 V DC ... 48 V DC
175 mA (at U_S = 24 V DC)

28 mm / 110 mm / 70 mm
IP20
-10°C ... 60°C
5% ... 95% (non-condensing)
EN 61000-6-4
EN 61000-6-2
Class A product, see page 527

Ordering data

Type	Order No.	Pcs./Pkt.
FL SWITCH SFNB 4TX/FX SM20	2891029	1

Standard switches with up to 8 ports

FL SWITCH SFN... Unmanaged Switches have a wide range of port configurations and features for standard applications.

Features:
- 5 to 8 ports in a narrow, metal housing
- Optional SC and ST fiber optic ports
- Quality of Service (QoS) prioritized messages
- RJ45 ports provide 10/100 Mbps speeds; fiber optic ports operate at 100 Mbps
- Auto negotiation and autocrossing simplify installation and setup
- LED indicators provide local diagnostics
- Switch-mounted cable locking and port blocking options

5/8 RJ45 ports for PROFINET

Technical data

		FL SWITCH SFN 5TX-PN	FL SWITCH SFN 8TX-PN
Ethernet interface			
Number of ports		5 (RJ45 ports)	8 (RJ45 ports)
Transmission speed		10/100 Mbps	
Fiber optic interface			
Number of ports		-	
Transmission speed		-	
Wavelength		-	
Transmission distance		-	
		-	
Function			
Basic functions		Unmanaged Switch / auto negotiation, complies with IEEE 802.3, store and forward switching mode	
Status and diagnostic indicators		LEDs: U_S, link and activity per port	
Power supply			
Supply voltage		24 V DC	
Residual ripple		3.6 V_{PP}	
Supply voltage range		9 V DC ... 32 V DC	
Typical current consumption		90 mA (at U_S = 24 V DC)	140 mA (at U_S = 24 V DC)
General data			
Dimensions	W / H / D	30 mm / 130 mm / 100 mm	50 mm / 130 mm / 100 mm
Degree of protection		IP20	
Ambient temperature (operation)		0°C ... 60°C	
Permissible humidity (operation)		5% ... 95% (non-condensing)	
Noise emission		EN 61000-6-4	
Noise immunity		EN 61000-6-2:2005	
EMC note		Class A product, see page 527	

Ordering data

Description	Type	Order No.	Pcs./Pkt.
Ethernet switch			
- 5 RJ45 ports	**FL SWITCH SFN 5TX-PN**	2891151	1
- 8 RJ45 ports	**FL SWITCH SFN 8TX-PN**	2891018	1
- 8 RJ45 ports, flow control disabled			
- 4 RJ45 ports, 1 SC FO port			
- 4 RJ45 ports, 1 ST FO port			
- 7 RJ45 ports, 1 SC FO port			
- 7 RJ45 ports, 1 ST FO port			
- 7 RJ45 ports, 1 SC FO port, flow control disabled			
- 6 RJ45 ports, 2 SC FO ports			
- 6 RJ45 ports, 2 ST FO ports			
- 6 RJ45 ports, 2 SC FO ports, flow control disabled			

5/8 RJ45 ports

Ex:

Technical data

FL SWITCH SFN 5TX	FL SWITCH SFN 8TX
5 (RJ45 ports)	8 (RJ45 ports)
10/100 Mbps	
-	
-	
-	
-	
-	
Unmanaged Switch / auto negotiation, complies with IEEE 802.3, store and forward switching mode LEDs: U_S, link and activity per port	
24 V DC	
3.6 V_{PP}	
9 V DC ... 32 V DC	
90 mA (at U_S = 24 V DC)	140 mA (at U_S = 24 V DC)
30 mm / 120 mm / 70 mm	50 mm / 120 mm / 70 mm
IP20	
0°C ... 60°C	
5% ... 95% (non-condensing)	
EN 61000-6-4	
EN 61000-6-2:2005	
Class A product, see page 527	

Ordering data

Type	Order No.	Pcs./Pkt.
FL SWITCH SFN 5TX	2891152	1
FL SWITCH SFN 8TX	2891929	1
FL SWITCH SFN 8TX-NF	2891022	1

4/7 RJ45 ports and 1 FO port

Ex:

Technical data

FL SWITCH SFN 4TX/FX	FL SWITCH SFN 7TX/FX ST
4 (RJ45 ports)	7 (RJ45 ports)
10/100 Mbps	
1 (SC multimode)	1 (ST multimode)
100 Mbps (full duplex)	
1300 nm	
2000 m (Fiberglass 50/125)	
2000 m (Fiberglass 62.5/125)	
Unmanaged Switch / auto negotiation, complies with IEEE 802.3, store and forward switching mode LEDs: U_S, link and activity per port	
24 V DC	
3.6 V_{PP}	
9 V DC ... 32 V DC	
140 mA (at U_S = 24 V DC)	190 mA (at U_S = 24 V DC)
30 mm / 120 mm / 70 mm	50 mm / 120 mm / 70 mm
IP20	
0°C ... 60°C	
5% ... 95% (non-condensing)	
EN 61000-6-4	
EN 61000-6-2:2005	
Class A product, see page 527	

Ordering data

Type	Order No.	Pcs./Pkt.
FL SWITCH SFN 4TX/FX	2891851	1
FL SWITCH SFN 4TX/FX ST	2891453	1
FL SWITCH SFN 7TX/FX	2891097	1
FL SWITCH SFN 7TX/FX ST	2891110	1
FL SWITCH SFN 7TX/FX-NF	2891023	1

6 RJ45 ports and 2 FO ports

Ex:

Technical data

FL SWITCH SFN 6TX/2FX	FL SWITCH SFN 6TX/2FX ST
6 (RJ45 ports)	
10/100 Mbps	
2 (SC multimode)	2 (ST multimode)
100 Mbps (full duplex)	
1300 nm	
2000 m (Fiberglass 50/125)	
2000 m (Fiberglass 62.5/125)	
Unmanaged Switch / auto negotiation, complies with IEEE 802.3, store and forward switching mode LEDs: U_S, link and activity per port	
24 V DC	
3.6 V_{PP}	
9 V DC ... 32 V DC	
230 mA (at U_S = 24 V DC)	
50 mm / 120 mm / 70 mm	
IP20	
0°C ... 60°C	
5% ... 95% (non-condensing)	
EN 61000-6-4	
EN 61000-6-2:2005	
Class A product, see page 527	

Ordering data

Type	Order No.	Pcs./Pkt.
FL SWITCH SFN 6TX/2FX	2891314	1
FL SWITCH SFN 6TX/2FX ST	2891411	1
FL SWITCH SFN 6TX/2FX-NF	2891024	1

Standard switches with up to 16 ports

FL SWITCH SFN(T)... 16-port Unmanaged Switches provide Ethernet connections with high contact density for larger or higher-level applications.

Features:

- 16 ports in a narrow, metal housing with redundant power supply
- Optional SC fiber optic ports
- Standard devices (-10°C ... +60°C) and devices with wide temperature range (-40°C ... +75°C) available
- RJ45 ports provide 10/100 Mbps speeds; fiber optic ports operate at 100 Mbps
- Auto negotiation and autocrossing simplify installation and setup
- LED indicators provide local diagnostics
- Cable locking security options
- DC and AC power supply options

5/8 RJ45 ports with AC supply

Ex:

Technical data

		FL SWITCH SFN 5TX-24VAC	FL SWITCH SFN 8TX-24VAC
Ethernet interface			
Number of ports		5 (RJ45 ports)	8 (RJ45 ports)
Transmission speed		10/100 Mbps	
Fiber optic interface			
Number of ports		-	
Transmission speed		-	
Wavelength		-	
Transmission distance		-	
Function			
Basic functions		Unmanaged Switch / auto negotiation, complies with IEEE 802.3, store and forward switching mode	
Status and diagnostic indicators		LEDs: U_S, link and activity per port	
Power supply			
Supply voltage		24 V AC/DC	
Residual ripple		3.6 V_{PP}	
Supply voltage range		20 V AC ... 28 V AC	
Typical current consumption		114 mA (at U_S = 24 V AC)	189 mA (at U_S = 24 V AC)
General data			
Dimensions	W / H / D	30 mm / 120 mm / 70 mm	50 mm / 120 mm / 70 mm
Degree of protection		IP20	
Ambient temperature (operation)		0°C ... 60°C	
Permissible humidity (operation)		5% ... 95% (non-condensing)	
Noise emission		EN 61000-6-4	
Noise immunity		EN 61000-6-2:2005	
EMC note		Class A product, see page 527	

Ordering data

Description	Type	Order No.	Pcs./Pkt.
Ethernet switch			
- 5 RJ45 ports	**FL SWITCH SFN 5TX-24VAC**	2891021	1
- 8 RJ45 ports	**FL SWITCH SFN 8TX-24VAC**	2891020	1
Ethernet switch			
- 16 RJ45 ports			
- 15 RJ45 ports, 1 SC FO port			
- 14 RJ45 ports, 2 SC FO ports			
Ethernet switch, wide temperature			
- 16 RJ45 ports			
- 14 RJ45 ports, 2 SC FO ports			

16 RJ45 ports

Ex:

Technical data

FL SWITCH SFN 16TX	FL SWITCH SFNT 16TX
16 (RJ45 ports) 10/100 Mbps	
- - - -	
Unmanaged Switch / auto negotiation, complies with IEEE 802.3, store-and-forward switching mode, includes alarm contacts LEDs: U_{S1}, U_{S2} (redundant voltage supply), link and activity per port	
24 V DC (redundant) 3.6 V_{PP} 12 V DC ... 48 V DC 350 mA (at U_S = 24 V DC)	
70 mm / 135 mm / 110 mm IP20 0°C ... 60°C -40°C ... 75°C 5% ... 95% (non-condensing) EN 61000-6-4 EN 61000-6-2 Class A product, see page 527	

Ordering data

Type	Order No.	Pcs./Pkt.
FL SWITCH SFN 16TX	2891933	1
FL SWITCH SFNT 16TX	2891952	1

15 RJ45 ports and 1 FO port

Ex:

Technical data

15 (RJ45 ports) 10/100 Mbps
1 (SC multimode) 100 Mbps (full duplex) 1300 nm 12.1 km (fiberglass with F-G 62.5/125 0.7 dB/km F1000)
Unmanaged Switch / auto negotiation, complies with IEEE 802.3, store-and-forward switching mode, includes alarm contacts LEDs: U_{S1}, U_{S2} (redundant voltage supply), link and activity per port
24 V DC (redundant) 3.6 V_{PP} 12 V DC ... 48 V DC 350 mA (at U_S = 24 V DC)
70 mm / 135 mm / 110 mm IP20 0°C ... 60°C 5% ... 95% (non-condensing) EN 61000-6-4 EN 61000-6-2 Class A product, see page 527

Ordering data

Type	Order No.	Pcs./Pkt.
FL SWITCH SFN 15TX/FX	2891934	1

14 RJ45 ports and 2 FO ports

Ex:

Technical data

FL SWITCH SFN 14TX/2FX	FL SWITCH SFNT 14TX/2FX
14 (RJ45 ports) 10/100 Mbps	
2 (SC multimode) 100 Mbps (full duplex) 1300 nm 12.1 km (fiberglass with F-G 62.5/125 0.7 dB/km F1000)	
Unmanaged Switch / auto negotiation, complies with IEEE 802.3, store-and-forward switching mode, includes alarm contacts LEDs: U_{S1}, U_{S2} (redundant voltage supply), link and activity per port	
24 V DC (redundant) 3.6 V_{PP} 12 V DC ... 48 V DC 350 mA (at U_S = 24 V DC)	
70 mm / 135 mm / 110 mm IP20 0°C ... 60°C -40°C ... 75°C 5% ... 95% (non-condensing) EN 61000-6-4 EN 61000-6-2	

Ordering data

Type	Order No.	Pcs./Pkt.
FL SWITCH SFN 14TX/2FX	2891935	1
FL SWITCH SFNT 14TX/2FX	2891954	1

Standard Gigabit switch

FL SWITCH SFN... Gigabit Unmanaged Switches have a wide range of port configurations with fiberglass and copper as well as functions for standard applications.

Features:

- 5/8 ports in a narrow, metal housing with redundant power supply
- All ports provide 1000 Mbps speeds
- LED indicators provide local diagnostics
- Relay contact
- **FL SWITCH SFN 6GT/2LX** provides a transmission distance of up to 10 km with 2 single mode fiberglass ports
- **FL SWITCH SFN 6GT/2LX-20** provides a transmission distance of up to 20 km with 2 single mode fiberglass ports

5 / 8 RJ45 ports

Ex:

Technical data

		FL SWITCH SFN 5GT	FL SWITCH SFN 8GT
Ethernet interface			
Number of ports		5 (RJ45 ports)	8 (RJ45 ports)
Transmission speed		10/100/1000 Mbps	
Fiber optic interface			
Number of ports		-	
Transmission speed		-	
Wavelength		-	
Transmission distance		-	
Function			
Basic functions		Unmanaged Switch / auto negotiation, complies with IEEE 802.3, store and forward switching mode	
Status and diagnostic indicators		LEDs: U_S, link and activity per port	LEDs: U_{S1}, U_{S2} (redundant voltage supply), link and activity per port
Power supply			
Supply voltage		24 V DC	24 V DC (redundant)
Residual ripple		3.6 V_{PP}	
Supply voltage range		10 V DC ... 60 V DC	9 V DC ... 32 V DC
Typical current consumption		200 mA (at U_S = 24 V DC)	430 mA (at U_S = 24 V DC)
General data			
Dimensions	W / H / D	28 mm / 110 mm / 70 mm	50 mm / 120 mm / 70 mm
Degree of protection		IP20	
Ambient temperature (operation)		-10°C ... 60°C	-40°C ... 75°C
Permissible humidity (operation)		5% ... 95% (non-condensing)	
Noise emission		EN 61000-6-4	
Noise immunity		EN 61000-6-2:2005	
EMC note		Class A product, see page 527	

Ordering data

Description	Type	Order No.	Pcs./Pkt.
Ethernet switch			
- 5 RJ45 ports	**FL SWITCH SFN 5GT**	2891444	1
- 8 RJ45 ports	**FL SWITCH SFN 8GT**	2891673	1
- 7 RJ45 ports, 1 SC FO port (multimode)			
- 6 RJ45 ports, 2 SC FO ports (multimode)			
- 6 RJ45 ports, 2 SC FO ports (single mode) with 10 km range			
- 6 RJ45 ports, 2 SC FO ports (single mode) with 20 km range			
Ethernet switch, wide temperature			
- 5 RJ45 ports			
Ethernet switch, wide temperature, protective coating for harsh environments			
- 5 RJ45 ports			

7 / 6 RJ45 ports and
1 / 2 fiber optic ports (multimode)

Ex:

Technical data

FL SWITCH SFN 7GT/SX	FL SWITCH SFN 6GT/2SX
7 (RJ45 ports)	6 (RJ45 ports)
10/100/1000 Mbps	
1 (SC multimode)	2 (SC multimode)
1000 Mbps (full duplex)	
850 nm	
220 m (Fiberglass 62.5/125)	
Unmanaged Switch / auto negotiation, complies with IEEE 802.3, store and forward switching mode	
LEDs: U_{S1}, U_{S2} (redundant voltage supply), link and activity per port	
24 V DC (redundant)	
3.6 V_{PP}	
9 V DC ... 32 V DC	
320 mA (at U_S = 24 V DC)	350 mA (at U_S = 24 V DC)
50 mm / 120 mm / 70 mm	
IP20	
-25°C ... 75°C	
5% ... 95% (non-condensing)	
EN 61000-6-4	
EN 61000-6-2:2005	
Class A product, see page 527	

Ordering data

Type	Order No.	Pcs./Pkt.
FL SWITCH SFN 7GT/SX	2891518	1
FL SWITCH SFN 6GT/2SX	2891398	1

6 RJ45 ports and
2 fiber optic ports (single mode)

Ex:

Technical data

FL SWITCH SFN 6GT/2LX	FL SWITCH SFN 6GT/2LX-20
6 (RJ45 ports)	
10/100/1000 Mbps	
2 (SC single mode)	
1000 Mbps (full duplex)	
1310 nm	
10000 m (Fiberglass 9/125)	20000 m (Fiberglass 9/125)
Unmanaged Switch / auto negotiation, complies with IEEE 802.3, store and forward switching mode	
LEDs: U_{S1}, U_{S2} (redundant voltage supply), link and activity per port	
24 V DC (redundant)	
3.6 V_{PP}	
9 V DC ... 32 V DC	
360 mA (at U_S = 24 V DC)	
50 mm / 120 mm / 70 mm	
IP20	
-25°C ... 75°C	0°C ... 60°C
5% ... 95% (non-condensing)	
EN 61000-6-4	
EN 61000-6-2:2005	
Class A product, see page 527	

Ordering data

Type	Order No.	Pcs./Pkt.
FL SWITCH SFN 6GT/2LX	2891987	1
FL SWITCH SFN 6GT/2LX-20	2891563	1

5 RJ45 ports,
extended temperature range
(-40°C ... +75°C)

Ex:

Technical data

FL SWITCH SFNT 5GT	FL SWITCH SFNT 5GT-C
5 (RJ45 ports)	
10/100/1000 Mbps	
-	
-	
-	
-	
Unmanaged Switch / auto negotiation, complies with IEEE 802.3, store and forward switching mode, includes QoS and alarm contact	
LEDs: U_{S1}, U_{S2} (redundant voltage supply), link and activity per port	
24 V DC (redundant)	
3.6 V_{PP}	
10 V DC ... 60 V DC	
223 mA (at U_S = 24 V DC)	
30 mm / 130 mm / 100 mm	
IP20	
-40°C ... 75°C	
5% ... 95% (non-condensing)	
EN 61000-6-4	
EN 61000-6-2:2005	
Class A product, see page 527	

Ordering data

Type	Order No.	Pcs./Pkt.
FL SWITCH SFNT 5GT	2891390	1
FL SWITCH SFNT 5GT-C	2891391	1

Standard switch with wide temperature range

FL SWITCH SFNT... Unmanaged Switches are designed for use in extreme environments and marine applications.

Features:

- 5 to 8 ports in a narrow, metal housing with redundant power supply
- Optional SC and ST fiber optic ports
- RJ45 ports provide 10/100 Mbps speeds; fiber optic ports operate at 100 Mbps
- Extended temperature range for harsh environments (-40°C ... +75°C)
- Auto negotiation and autocrossing simplify installation and setup
- Quality of Service (QoS) prioritized messages
- LED indicators provide local diagnostics
- Alarm contact provides power and link status diagnostics
- Switch-mounted cable locking and port blocking options

5/8 RJ45 ports

Ex:

Technical data

		FL SWITCH SFNT 5TX	FL SWITCH SFNT 8TX
Ethernet interface			
Number of ports		5 (RJ45 ports)	8 (RJ45 ports)
Transmission speed		10/100 Mbps	
Fiber optic interface			
Number of ports		-	
Transmission speed		-	
Wavelength		-	
Transmission distance		-	
Function			
Basic functions		Unmanaged Switch / auto negotiation, complies with IEEE 802.3, store and forward switching mode, includes QoS and alarm contact	
Status and diagnostic indicators		LEDs: U_{S1}, U_{S2} (redundant voltage supply), link and activity per port	
Power supply			
Supply voltage		24 V DC (redundant)	
Residual ripple		3.6 V_{PP}	
Supply voltage range		9 V DC ... 32 V DC	
Typical current consumption		125 mA (at U_S = 24 V DC)	155 mA (at U_S = 24 V DC)
General data			
Dimensions	W / H / D	30 mm / 130 mm / 100 mm	50 mm / 130 mm / 100 mm
Degree of protection		IP20	
Ambient temperature (operation)		-40°C ... 75°C	
Permissible humidity (operation)		5% ... 95% (non-condensing)	
Noise emission		EN 61000-6-4	
Noise immunity		EN 61000-6-2	
EMC note		Class A product, see page 527	

Ordering data

Description	Type	Order No.	Pcs./Pkt.
Ethernet switch, wide temperature			
- 5 RJ45 ports	**FL SWITCH SFNT 5TX**	2891003	1
- 8 RJ45 ports	**FL SWITCH SFNT 8TX**	2891005	1
- 4 RJ45 ports, 1 SC FO port			
- 7 RJ45 ports, 1 SC FO port			
- 7 RJ45 ports, 1 ST FO port			
- 6 RJ45 ports, 2 SC FO ports			
- 6 RJ45 ports, 2 ST FO ports			
Ethernet switch, wide temperature, protective coating for harsh environments			
- 5 RJ45 ports	**FL SWITCH SFNT 5TX-C**	2891043	1
- 8 RJ45 ports	**FL SWITCH SFNT 8TX-C**	2891045	1
- 4 RJ45 ports, 1 SC FO port			
- 7 RJ45 ports, 1 SC FO port			
- 7 RJ45 ports, 1 ST FO port			
- 6 RJ45 ports, 2 SC FO ports			
- 6 RJ45 ports, 2 ST FO ports			

Accessories

Mounting plate, for 5- and 8-port SFNT switches	**FL PA SFNT 5-8**	2891012	1

4 RJ45 ports and 1 FO port

7 RJ45 ports and 1 FO port

6 RJ45 ports and 2 FO ports

Ex:

Ex:

Ex:

Technical data

4 (RJ45 ports) 10/100 Mbps	
1 (SC multimode) 100 Mbps (full duplex) 1300 nm 12.1 km (fiberglass with F-G 62.5/125 0.7 dB/km F1000)	
Unmanaged Switch / auto negotiation, complies with IEEE 802.3, store and forward switching mode, includes QoS and alarm contact LEDs: U_{S1}, U_{S2} (redundant voltage supply), link and activity per port	
24 V DC (redundant) 3.6 V_{PP} 9 V DC ... 32 V DC 180 mA (at U_S = 24 V DC)	
30 mm / 130 mm / 100 mm IP20 -40°C ... 75°C 5% ... 95% (non-condensing) EN 61000-6-4 EN 61000-6-2 Class A product, see page 527	

Ordering data

Type	Order No.	Pcs./Pkt.
FL SWITCH SFNT 4TX/FX	2891004	1
FL SWITCH SFNT 4TX/FX-C	2891044	1

Accessories

FL PA SFNT 5-8	2891012	1

Technical data

FL SWITCH SFNT 7TX/FX	FL SWITCH SFNT 7TX/FX ST
7 (RJ45 ports) 10/100 Mbps	
1 (SC multimode)	1 (ST multimode)
100 Mbps (full duplex) 1300 nm 12.1 km (fiberglass with F-G 62.5/125 0.7 dB/km F1000)	
Unmanaged Switch / auto negotiation, complies with IEEE 802.3, store and forward switching mode, includes QoS and alarm contact LEDs: U_{S1}, U_{S2} (redundant voltage supply), link and activity per port	
24 V DC (redundant) 3.6 V_{PP} 9 V DC ... 32 V DC 180 mA (at U_S = 24 V DC)	
50 mm / 130 mm / 100 mm IP20 -40°C ... 75°C 5% ... 95% (non-condensing) EN 61000-6-4 EN 61000-6-2 Class A product, see page 527	

Ordering data

Type	Order No.	Pcs./Pkt.
FL SWITCH SFNT 7TX/FX	2891006	1
FL SWITCH SFNT 7TX/FX ST	2891007	1
FL SWITCH SFNT 7TX/FX-C	2891046	1
FL SWITCH SFNT 7TX/FX ST-C	2891047	1

Accessories

FL PA SFNT 5-8	2891012	1

Technical data

FL SWITCH SFNT 6TX/2FX	FL SWITCH SFNT 6TX/2FX ST
6 (RJ45 ports) 10/100 Mbps	
2 (SC multimode)	2 (ST multimode)
100 Mbps (full duplex) 1300 nm	-
12.1 km (fiberglass with F-G 62.5/125 0.7 dB/km F1000)	
Unmanaged Switch / auto negotiation, complies with IEEE 802.3, store and forward switching mode, includes QoS and alarm contact LEDs: U_{S1}, U_{S2} (redundant voltage supply), link and activity per port	
24 V DC (redundant) 3.6 V_{PP} 9 V DC ... 32 V DC 250 mA (at U_S = 24 V DC)	
50 mm / 130 mm / 100 mm IP20 -40°C ... 75°C 5% ... 95% (non-condensing) EN 61000-6-4 EN 61000-6-2 Class A product, see page 527	

Ordering data

Type	Order No.	Pcs./Pkt.
FL SWITCH SFNT 6TX/2FX	2891025	1
FL SWITCH SFNT 6TX/2FX ST	2891026	1
FL SWITCH SFNT 6TX/2FX-C	2891048	1
FL SWITCH SFNT 6TX/2FX ST-C	2891049	1

Accessories

FL PA SFNT 5-8	2891012	1

Standard SF switch

FL SWITCH SF... Unmanaged Switches have a wide variety of port configurations in a low-profile metal housing and are designed for standard applications.

Features:

- Up to 16 ports in a low-profile metal housing with redundant power supply
- Optional SC and ST fiber optic ports
- RJ45 ports provide 10/100 Mbps speeds; fiber optic ports operate at 100 Mbps
- Auto negotiation and autocrossing simplify installation and setup
- LED indicators provide local diagnostics
- Relay contact for alarm processing of voltage states
- Cable locking security options

8/16 RJ45 ports

Ex:

Technical data

		FL SWITCH SF 8TX	FL SWITCH SF 16TX
Ethernet interface			
Number of ports		8 (RJ45 ports)	16 (RJ45 ports)
Transmission speed		10/100 Mbps	
Fiber optic interface			
Number of ports		-	
Transmission speed		-	
Wavelength		-	
Transmission distance		-	
Other connections			
Floating signal contact		Plug-in/screw connection via COMBICON	
Function			
Basic functions		Unmanaged Switch / auto negotiation, complies with IEEE 802.3, store and forward switching mode	
Status and diagnostic indicators		LEDs: U_{S1}, U_{S2} (redundant voltage supply), link and activity per port	
Power supply			
Supply voltage		24 V DC (redundant)	
Residual ripple		3.6 V_{PP}	
Supply voltage range		18.5 V DC ... 30.2 V DC	
Typical current consumption		200 mA (at U_S = 24 V DC)	300 mA (at U_S = 24 V DC)
General data			
Dimensions	W / H / D	135 mm / 94.3 mm / 30 mm	205 mm / 94.3 mm / 30 mm
Degree of protection		IP20	
Ambient temperature (operation)		0°C ... 55°C	
Permissible humidity (operation)		5% ... 95% (non-condensing)	
Noise emission		EN 61000-6-4	
Noise immunity		EN 61000-6-2:2005	
EMC note		Class A product, see page 527	

Ordering data

Description	Type	Order No.	Pcs./Pkt.
Ethernet switch			
- 8 RJ45 ports	**FL SWITCH SF 8TX**	2832771	1
- 16 RJ45 ports	**FL SWITCH SF 16TX**	2832849	1
- 7 RJ45 ports, 1 SC FO port			
- 7 RJ45 ports, 1 ST FO port			
- 15 RJ45 ports, 1 SC FO port			
- 6 RJ45 ports, 2 SC FO ports			
- 6 RJ45 ports, 2 ST FO ports			
- 14 RJ45 ports, 2 SC FO ports			
- 4 RJ45 ports, 3 ST FO ports			

7/15 RJ45 ports and 1 FO port

6/14 RJ45 ports and 2 FO ports

4 RJ45 ports and 3 FO ports

Ex:

Technical data

FL SWITCH SF 7TX/FX	FL SWITCH SF 15TX/FX	
7 (RJ45 ports)	15 (RJ45 ports)	
10/100 Mbps		
1 (SC multimode)		
100 Mbps (full duplex)		
1300 nm		
5.7 km (fiberglass with F-G 50/125 0.7 dB/km F1200)	6400 m (fiberglass with F-G 50/125 0.7 dB/km F1200)	
Plug-in/screw connection via COMBICON		
Unmanaged Switch / auto negotiation, complies with IEEE 802.3, store and forward switching mode		
LEDs: U_{S1}, U_{S2} (redundant voltage supply), link and activity per port		
24 V DC (redundant)		
3.6 V_{PP}		
18.5 V DC ... 30.2 V DC		
220 mA (at U_S = 24 V DC)	330 mA (at U_S = 24 V DC)	
135 mm / 115.3 mm / 30 mm	205 mm / 115.3 mm / 30 mm	
IP20		
0°C ... 55°C		
5% ... 95% (non-condensing)		
EN 61000-6-4		
EN 61000-6-2:2005		
Class A product, see page 527		

Ordering data

Type	Order No.	Pcs./Pkt.
FL SWITCH SF 7TX/FX	2832726	1
FL SWITCH SF 7TX/FX ST	2832577	1
FL SWITCH SF 15TX/FX	2832661	1

Ex:

Technical data

FL SWITCH SF 6TX/2FX	FL SWITCH SF 14TX/2FX	
6 (RJ45 ports)	14 (RJ45 ports)	
10/100 Mbps		
2 (SC multimode)		
100 Mbps (full duplex)		
1300 nm		
5.7 km (fiberglass with F-G 50/125 0.7 dB/km F1200)	6400 m (fiberglass with F-G 50/125 0.7 dB/km F1200)	
Plug-in/screw connection via COMBICON		
Unmanaged Switch / auto negotiation, complies with IEEE 802.3, store and forward switching mode		
LEDs: U_{S1}, U_{S2} (redundant voltage supply), link and activity per port		
24 V DC (redundant)		
3.6 V_{PP}		
18.5 V DC ... 30.2 V DC		
240 mA (at U_S = 24 V DC)	360 mA (at U_S = 24 V DC)	
135 mm / 115.3 mm / 30 mm	205 mm / 115.3 mm / 30 mm	
IP20		
0°C ... 55°C		
5% ... 95% (non-condensing)		
EN 61000-6-4		
EN 61000-6-2:2005		
Class A product, see page 527		

Ordering data

Type	Order No.	Pcs./Pkt.
FL SWITCH SF 6TX/2FX	2832933	1
FL SWITCH SF 6TX/2FX ST	2832674	1
FL SWITCH SF 14TX/2FX	2832593	1

Ex:

Technical data

4 (RJ45 ports)
10/100 Mbps
3 (ST multimode)
100 Mbps (full duplex)
1300 nm
6400 m (fiberglass with F-G 50/125 0.7 dB/km F1200)
Plug-in/screw connection via COMBICON
Unmanaged Switch / auto negotiation, complies with IEEE 802.3, store and forward switching mode
LEDs: U_{S1}, U_{S2} (redundant voltage supply), link and activity per port
24 V DC (redundant)
3.6 V_{PP}
18.5 V DC ... 30.2 V DC
240 mA (at U_S = 24 V DC)
135 mm / 115.3 mm / 30 mm
IP20
0°C ... 55°C
5% ... 95% (non-condensing)
EN 61000-6-4
EN 61000-6-2:2005
Class A product, see page 527

Ordering data

Type	Order No.	Pcs./Pkt.
FL SWITCH SF 4TX/3FX ST	2832603	1

IP67 switches and switches for 19" rack mounting

The switches for rack mounting offer 24 twisted pair ports. They are optimized for large-scale or 19" applications with mounting rack assembly.

Thanks to its high degree of protection and compact design, the **FL SWITCH 1605 M12** is ideal for use directly in the machine.

24 RJ45 ports

5 ports in M12 format

		Technical data		Technical data
		FL SWITCH 1824	FL SWITCH 1924	
Ethernet interface				
Number of ports		24 (RJ45 ports)		5 (M12 socket)
Transmission speed		10/100 Mbps	10/100/1000 Mbps	10/100 Mbps
Function				
Basic functions		Unmanaged Switch / auto negotiation, complies with IEEE 802.3, store and forward switching mode		Unmanaged Switch / auto negotiation, complies with standard IEEE 802.3, store-and-forward switching mode, 2 priority classes in accordance with IEEE802.1p, PTCP filter
Status and diagnostic indicators		LEDs: U_S, link and activity per port		LEDs: US (power supply), 2 LEDs per Ethernet port (Link and Activity)
Power supply				
Supply voltage		120 V AC 220 V AC		24 V DC (M12 connector)
Supply voltage range		100 V AC ... 240 V AC (50/60 Hz)		9 V DC ... 32 V DC
Typical current consumption		270 mA (100 V AC)	312 mA (100 V AC)	40 mA (at U_S = 24 V DC)
General data				
Dimensions	W / H / D	440 mm / 44 mm / 173 mm	482 mm / 44 mm / 210 mm	30 mm / 200 mm / 41 mm
Degree of protection		IP20		IP65 / IP66 / IP67
Ambient temperature (operation)		0°C ... 60°C		-40°C ... 70°C
Permissible humidity (operation)		5% ... 95% (non-condensing)		10% ... 95%
Noise emission		EN 61000-6-4		EN 61000-6-4
Noise immunity		EN 61000-6-2:2005		EN 61000-6-2
EMC note		Class A product, see page 527		

	Ordering data			Ordering data		
Description	Type	Order No.	Pcs./Pkt.	Type	Order No.	Pcs./Pkt.
Ethernet switch						
- 24 RJ45 ports	**FL SWITCH 1824**	2891041	1			
- 24 RJ45 ports, 1000 Mbps	**FL SWITCH 1924**	2891057	1			
Ethernet switch						
- 5 Ethernet ports in M12 format				**FL SWITCH 1605 M12**	2700200	1

Unmanaged Switches for IEC 61850 applications

The **FL SWITCH 1008E** industrial Unmanaged Switch is designed for use in energy technology. With its robust design, it can be used in environments subject to high levels of EMI around switchgear that have been designed in accordance with the new IEC 61850 standard.

Features:

- 8 RJ45 ports in metal housing with DIN rail adapter
- Extended temperature range for harsh environments (-40°C ... +75°C)
- Redundant power supply with a wide range from 12 ... 57 V DC (24, 36, 48 V DC)
- Robust design for high EMC requirements, such as electrostatic discharge with 15 kV air discharge and 8 kV contact discharge; surge withstand capability (surge) and fast transients (burst) up to 4 kV
- Floating alarm contact for power supply monitoring and diagnostics
- Link monitoring of every port for diagnostics via alarm LED and alarm contact can be configured via DIP switches

Notes:

A media converter which meets the same requirements that are required for switchgear and transformer substations in energy technology can be found on page 353

IEC 61850-3

8 RJ45 ports

Technical data

Ethernet interface		
Number of ports		8 (RJ45 ports)
Transmission speed		10/100 Mbps
Connection method		RJ45
Function		
Basic functions		Unmanaged Switch / auto negotiation, complies with IEEE 802.3, store and forward switching mode, includes QoS and alarm contact. Meets IEC 61850-3 and IEEE 1613 standards
Status and diagnostic indicators		LEDs: U_{S1}, U_{S2} (redundant voltage supply), link and activity per port
Network expansion parameters		
Cascading depth		Network, linear, and star structure: any
Maximum cable length (twisted pair)		100 m
Power supply		
Supply voltage		24 V DC (redundant) 48 V DC
Residual ripple		3.6 V_{PP}
Supply voltage range		12 V DC ... 57 V DC
Typical current consumption		440 mA (at U_S = 24 V DC)
General data		
Dimensions	W / H / D	54.4 mm / 146.4 mm / 125 mm
Degree of protection		IP20
Ambient temperature (operation)		-40°C ... 75°C
Permissible humidity (operation)		5% ... 95% (non-condensing)
Noise emission		EN 61000-6-4
Noise immunity		IEC 61850-3, IEEE 1613, EN 61000-6-2: 2005
EMC note		Class A product, see page 527

Ordering data

Description	Type	Order No.	Pcs./Pkt.
Ethernet switch - 8 RJ45 ports	**FL SWITCH 1008E**	2891065	1

Unmanaged Power over Ethernet Switches

The 1000 series Unmanaged Power over Ethernet (PoE) Switches enable you to supply up to eight end devices with power and data via the same Ethernet cable.

Features:
– Up to 30 W per port
– Gigabit data throughput
– Jumbo frame support
– Versions with link monitoring

4 RJ45 PoE ports and 1 RJ45 port

2 RJ45 PoE ports and 2 SFP ports

		Technical data	Technical data
Ethernet interface			
Number of ports		1 (RJ45 port)	-
Transmission speed		10/100 Mbps	-
Ethernet interface (PoE)			
Number of ports		4 (RJ45 ports)	2 (RJ45 ports)
Transmission speed		10/100 Mbps	10/100/1000 Mbps
Connection method		RJ45 socket	RJ45 socket
Fiber optic interface			
Number of ports		-	2 (SFP ports)
Transmission speed		-	100/1000 Mbps (full duplex)
Transmission distance		-	up to 80 km (depending on the fiber/SFP module used)
Function			
Basic functions		PSE, complies with IEEE 802.3at	Store-and-forward switch, 10/100/1000 Mbps, auto negotiation, redundant power supply, PoE in accordance with IEEE 802.3at/ 802.3af, jumbo frames up to 10240 bytes, alarm contact
Status and diagnostic indicators		LEDs: U_{S1}, U_{S2} (redundant voltage supply), Alarm (alarm contact), Link/Activity and PoE per Ethernet port	LEDs: U_{S1}, U_{S2} (redundant voltage supply), Alarm (alarm contact), Link/Activity and PoE per Ethernet port
Power supply			
Supply voltage		24 V DC	55 V DC (redundant)
Residual ripple		3.6 V_{PP}	3.6 V_{PP}
Supply voltage range		18 V DC ... 57 V DC	46 V DC ... 57 V DC (>52 V DC for PoE+ recommended)
Typical current consumption		148 mA (at U_S =24 V DC)	80 mA (at U_S = 55 V DC)
General data			
Dimensions	W / H / D	55 mm / 117 mm / 78 mm	42.8 mm / 100 mm / 101 mm
Degree of protection		IP20	IP30
Ambient temperature (operation)		-40°C ... 75°C	-40°C ... 75°C
Permissible humidity (operation)		5% ... 95% (non-condensing)	5% ... 95% (non-condensing)
EMC note		Class A product, see page 527	Class A product, see page 527

Ordering data

Description	Type	Order No.	Pcs./Pkt.	Type	Order No.	Pcs./Pkt.
Power over Ethernet switch						
	FL SWITCH 1001T-4POE	**2891064**	1			
				FL SWITCH 1000T-2POE-GT-2SFP	**1026765**	1
Gigabit Power over Ethernet switch						

Accessories

SFP module		**See page 332**

4 RJ45 PoE ports and 1 RJ45 port, optional 1 SFP port

8 RJ45 PoE ports and 2 SFP ports

8 PoE ports (M12 female), for wall mounting, IP67 protection

Technical data

	FL SWITCH 1001T-4POE-GT	FL SWITCH 1001T-4POE-GT-SFP
	1 (RJ45 port) 10/100/1000 Mbps	
	4 (RJ45 ports) 10/100/1000 Mbps RJ45 socket	
	-	1 (SFP port)
	-	1000 Mbps (full duplex)
	-	up to 80 km (depending on the fiber/SFP module used)
	Store-and-forward switch, 10/100/1000 Mbps, auto negotiation, redundant power supply, PoE in accordance with IEEE 802.3at/802.3af, jumbo frames up to 10240 bytes, alarm contact	
	LEDs: U_{S1}, U_{S2} (redundant voltage supply), Alarm (alarm contact), Link/Activity and PoE per Ethernet port	
	24 V DC 48 V DC 3.6 V_{PP} 18 V DC ... 57 V DC	
	165 mA (at U_S =24 V DC)	214 mA (at U_S =24 V DC)
	30 mm / 149 mm / 107.8 mm IP30 -40°C ... 75°C 5% ... 95% (non-condensing) Class A product, see page 527	

Ordering data

Type	Order No.	Pcs./Pkt.
FL SWITCH 1001T-4POE-GT	1026937	1
FL SWITCH 1001T-4POE-GT-SFP	1026932	1

Accessories

See page 332

Technical data

	-
	-
	8 (RJ45 ports) 10/100/1000 Mbps RJ45 socket
	2 (SFP ports)
	1000 Mbps (full duplex)
	up to 80 km (depending on the fiber/SFP module used)
	Store-and-forward switch, 10/100/1000 Mbps, auto negotiation, redundant power supply, PoE in accordance with IEEE 802.3at/802.3af, jumbo frames up to 10240 bytes, alarm contact
	LEDs: U_{S1}, U_{S2} (redundant voltage supply), Alarm (alarm contact), Link/Activity and PoE per Ethernet port
	24 V DC 48 V DC 3.6 V_{PP} 18 V DC ... 57 V DC
	470 mA (at U_S =24 V DC)
	63.5 mm / 145 mm / 136 mm IP30 -40°C ... 75°C 5% ... 95% (non-condensing) Class A product, see page 527

Ordering data

Type	Order No.	Pcs./Pkt.
FL SWITCH 1000T-8POE-GT-2SFP	1026929	1

Accessories

See page 332

Technical data

-
-
8 10/100/1000 Mbps M12 connector, 8-pos.
-
-
-
Store-and-forward switch, 10/100/1000 Mbps, auto negotiation, complies with standard IEEE 802.3, 4 priority classes in accordance with IEEE 802.1p, PoE in accordance with IEEE 802.3at/802.3af, jumbo frames up to 9720 bytes
LEDs: US1, US2 (power supply), Fail (alarm contact), 3 LEDs per Ethernet port (Link, Activity, and PoE Status), and PoE performance
24 V DC (M12 connector)
3.6 V_{PP} 18.7 V DC ... 30.5 V DC
300 mA (at U_S = 24 V DC)
176 mm / 112 mm / 100 mm IP65 / IP66 / IP67 -40°C ... 70°C (non-condensing) 10% ... 95%

Ordering data

Type	Order No.	Pcs./Pkt.
FL SWITCH 1708 M12 POE	2701883	1

Accessories

2000 series Managed Switches for the series production of machines

2000 and 2100 Managed Switches provide an optimum range of functions for use in applications that require easy network configuration and diagnostics.

Features:

- Loop Protection via Rapid Spanning Tree Protocol (RSTP)
- Port-based DHCP server
- Configuration memory (SD card)
- IGMP snooping/querier
- PROFINET and EtherNet/IP™ supported
- Gigabit versions support jumbo frames

5/8 RJ45 ports
10/100 Mbps

Technical data

		FL SWITCH 2005	FL SWITCH 2008
Ethernet interface			
Number of ports		5 (RJ45 ports)	8 (RJ45 ports)
Transmission speed		10/100 Mbps	
Function			
Basic functions		Store-and-forward switch, complies with IEEE 802.3	
Management		Web-based management (HTTP/HTTPS) SNMPv1/v2/v3 Command-line interface (Telnet, SSH)	
Diagnostic function		RMON History LLDP (Link Layer Discovery Protocol) SNMP-Traps N:1-Portmirroring ACD (Address Conflict Detection)	
Redundancy		MRP (Media Redundancy Protocol) RSTP (Rapid Spanning Tree Protocol)	
Status and diagnostic indicators		LEDs: US (power supply), 2 LEDs per Ethernet port (Link/Activity and Speed)	
Power supply			
Supply voltage		24 V DC (single)	
Residual ripple		3.6 V_{PP}	
Supply voltage range		18 V DC ... 32 V DC	
Typical current consumption		165 mA (at U_S = 24 V DC)	180 mA (at U_S = 24 V DC)
General data			
Dimensions	W / H / D	45 mm / 130 mm / 115 mm	
Degree of protection		IP20	
Ambient temperature (operation)		0°C ... 60°C	
Permissible humidity (operation)		10% ... 95% (non-condensing)	
Noise emission		EN 61000-6-4	
Noise immunity		EN 61000-6-2	
EMC note		Class A product, see page 527	

Ordering data

Description	Type	Order No.	Pcs./Pkt.
Ethernet switch			
- 5 RJ45 ports	**FL SWITCH 2005**	2702323	1
- 8 RJ45 ports	**FL SWITCH 2008**	2702324	1
- 16 RJ45 ports			

Accessories

Parameterization memory, Flash card without license	**SD FLASH 2GB**	2988162	1

16 RJ45 ports
10/100 Mbps

Technical data

16 (RJ45 ports)
10/100 Mbps

Store-and-forward switch, complies with IEEE 802.3

Web-based management (HTTP/HTTPS)
SNMPv1/v2/v3
Command-line interface (Telnet, SSH)
RMON History
LLDP (Link Layer Discovery Protocol)
SNMP-Traps
N:1-Portmirroring
ACD (Address Conflict Detection)
MRP (Media Redundancy Protocol)
RSTP (Rapid Spanning Tree Protocol)
LEDs: US (power supply),
2 LEDs per Ethernet port (Link/Activity and Speed)

24 V DC (single)
3.6 V_{PP}
18 V DC ... 32 V DC
315 mA (at U_S = 24 V DC)

85 mm / 130 mm / 115 mm
IP20
0°C ... 60°C
10% ... 95% (non-condensing)
EN 61000-6-4
EN 61000-6-2

Ordering data

Type	Order No.	Pcs./Pkt.
FL SWITCH 2016	2702903	1

Accessories

SD FLASH 2GB	2988162	1

5/8 RJ45 ports
10/100/1000 Mbps

CC-Link IE Field

Technical data

FL SWITCH 2105	FL SWITCH 2108
5 (RJ45 ports)	8 (RJ45 ports)

10/100/1000 Mbps

Store-and-forward switch, complies with IEEE 802.3

Web-based management (HTTP/HTTPS)
SNMPv1/v2/v3
Command-line interface (Telnet, SSH)
RMON History
LLDP (Link Layer Discovery Protocol)
SNMP-Traps
N:1-Portmirroring
ACD (Address Conflict Detection)
MRP (Media Redundancy Protocol)
RSTP (Rapid Spanning Tree Protocol)
LEDs: US (power supply),
2 LEDs per Ethernet port (Link/Activity and Speed)

24 V DC (single)
3.6 V_{PP}
18 V DC ... 32 V DC

225 mA (at U_S = 24 V DC)	275 mA (at U_S = 24 V DC)

45 mm / 130 mm / 115 mm
IP20
0°C ... 60°C
10% ... 95% (non-condensing)
EN 61000-6-4
EN 61000-6-2
Class A product, see page 527

Ordering data

Type	Order No.	Pcs./Pkt.
FL SWITCH 2105	2702665	1
FL SWITCH 2108	2702666	1

Accessories

SD FLASH 2GB	2988162	1

16 RJ45 ports
10/100/1000 Mbps

Technical data

16 (RJ45 ports)
10/100/1000 Mbps

Store-and-forward switch, complies with IEEE 802.3

Web-based management (HTTP/HTTPS)
SNMPv1/v2/v3
Command-line interface (Telnet, SSH)
RMON History
LLDP (Link Layer Discovery Protocol)
SNMP-Traps
N:1-Portmirroring
ACD (Address Conflict Detection)
MRP (Media Redundancy Protocol)
RSTP (Rapid Spanning Tree Protocol)
LEDs: US (power supply),
2 LEDs per Ethernet port (Link/Activity and Speed)

24 V DC (single)
3.6 V_{PP}
18 V DC ... 32 V DC
315 mA (at U_S = 24 V DC)

85 mm / 130 mm / 115 mm
IP20
0°C ... 60°C
10% ... 95% (non-condensing)
EN 61000-6-4
EN 61000-6-2

Ordering data

Type	Order No.	Pcs./Pkt.
FL SWITCH 2116	2702908	1

Accessories

SD FLASH 2GB	2988162	1

2000 series Managed Switches for universal automation applications

The 2200 and 2300 Managed Switches with enhanced functions offer an optimum range of functions, choice of versions, and approvals for a wide range of applications, e.g., in the maritime sector or process technology.

Features:

- PROFINET device
- Media Redundancy Protocol (MRP) in accordance with IEC 62439
- Extended temperature range (-40°C ... +70°C)
- Redundant power supply
- IGMP snooping/querier
- HTTPS/SNMPv3
- Port-based/pool-based DHCP server, DHCP option 82
- Simple Network Time Protocol (SNTP)
- Preconfigured versions for PROFINET applications
- Gigabit versions support jumbo frames
- MAC-based port security
- RADIUS authentication (IEEE 802.1x)

Notes:

The approvals refer to the first product listed in each column. Detailed information can be found in the product area on our website at phoenixcontact.net/products.

5/8 RJ45 ports
10/100 Mbps

Ex:

Technical data

		FL SWITCH 2205	FL SWITCH 2208
Ethernet interface			
Number of ports		5 (RJ45 ports)	8 (RJ45 ports)
Transmission speed		10/100 Mbps	
Function			
Basic functions		Store-and-forward switch, complies with IEEE 802.3	
Management		Web-based management (HTTP/HTTPS) SNMPv1/v2/v3 Command-line interface (Telnet, SSH)	
Diagnostic function		RMON History LLDP (Link Layer Discovery Protocol) SNMP-Traps N:1-Portmirroring ACD (Address Conflict Detection)	
Redundancy		MRP (Media Redundancy Protocol) RSTP (Rapid Spanning Tree Protocol) FRD (Fast Ring Detection) Large Tree Support	
Status and diagnostic indicators		LEDs: US1, US2 (power supply), Fail (alarm contact), 2 LEDs per Ethernet port (Link/Activity and Speed)	
Power supply			
Supply voltage		24 V DC (redundant)	
Residual ripple		3.6 V_{PP}	
Supply voltage range		9 V DC ... 57 V DC	
Typical current consumption		170 mA (at U_S = 24 V DC)	185 mA (at U_S = 24 V DC)
General data			
Dimensions	W / H / D	45 mm / 130 mm / 115 mm	
Degree of protection		IP20	
Ambient temperature (operation)		-40°C ... 70°C	
Permissible humidity (operation)		10% ... 95% (non-condensing)	
Noise emission		EN 61000-6-4	
Noise immunity		EN 61000-6-2	
EMC note		Class A product, see page 527	

Ordering data

Description	Type	Order No.	Pcs./Pkt.
Ethernet switch			
- 5 RJ45 ports	**FL SWITCH 2205**	2702326	1
- 8 RJ45 ports	**FL SWITCH 2208**	2702327	1
- 8 RJ45 ports, preconfigured for PROFINET	**FL SWITCH 2208 PN**	1044024	1
- 16 RJ45 ports			
- 16 RJ45 ports, preconfigured for PROFINET			

Accessories

Parameterization memory, Flash card without license	**SD FLASH 2GB**	2988162	1

16 RJ45 ports
10/100 Mbps

Ex:

Technical data

16 (RJ45 ports)
10/100 Mbps

Store-and-forward switch, complies with IEEE 802.3

Web-based management (HTTP/HTTPS)
SNMPv1/v2/v3
Command-line interface (Telnet, SSH)
RMON History
LLDP (Link Layer Discovery Protocol)
SNMP-Traps
N:1-Portmirroring
ACD (Address Conflict Detection)
MRP (Media Redundancy Protocol)
RSTP (Rapid Spanning Tree Protocol)
FRD (Fast Ring Detection)
Large Tree Support
LEDs: US1, US2 (power supply), Fail (alarm contact),
2 LEDs per Ethernet port (Link/Activity and Speed)

24 V DC (redundant)
3.6 V_{PP}
12 V DC ... 57 V DC
315 mA (at U_S = 24 V DC)

85 mm / 130 mm / 115 mm
IP20
-40°C ... 70°C
10% ... 95% (non-condensing)
EN 61000-6-4
EN 61000-6-2

Ordering data

Type	Order No.	Pcs./Pkt.
FL SWITCH 2216	2702904	1
FL SWITCH 2216 PN	1044029	1

Accessories

SD FLASH 2GB	2988162	1

8 RJ45 ports
10/100/1000 Mbps

CC-Link IE Field
Ex:

Technical data

8 (RJ45 ports)
10/100/1000 Mbps

Store-and-forward switch, complies with IEEE 802.3

Web-based management (HTTP/HTTPS)
SNMPv1/v2/v3
Command-line interface (Telnet, SSH)
RMON History
LLDP (Link Layer Discovery Protocol)
SNMP-Traps
N:1-Portmirroring
ACD (Address Conflict Detection)
MRP (Media Redundancy Protocol)
RSTP (Rapid Spanning Tree Protocol)
FRD (Fast Ring Detection)
Large Tree Support
LEDs: US1, US2 (power supply), Fail (alarm contact),
2 LEDs per Ethernet port (Link/Activity and Speed)

24 V DC (redundant)
3.6 V_{PP}
12 V DC ... 57 V DC
280 mA (at U_S = 24 V DC)

45 mm / 130 mm / 115 mm
IP20
-40°C ... 70°C
10% ... 95% (non-condensing)
EN 61000-6-4
EN 61000-6-2
Class A product, see page 527

Ordering data

Type	Order No.	Pcs./Pkt.
FL SWITCH 2308	2702652	1
FL SWITCH 2308 PN	1009220	1

Accessories

SD FLASH 2GB	2988162	1

16 RJ45 ports
10/100/1000 Mbps

Ex:

Technical data

16 (RJ45 ports)
10/100/1000 Mbps

Store-and-forward switch, complies with IEEE 802.3

Web-based management (HTTP/HTTPS)
SNMPv1/v2/v3
Command-line interface (Telnet, SSH)
RMON History
LLDP (Link Layer Discovery Protocol)
SNMP-Traps
N:1-Portmirroring
ACD (Address Conflict Detection)
MRP (Media Redundancy Protocol)
RSTP (Rapid Spanning Tree Protocol)
FRD (Fast Ring Detection)
Large Tree Support
LEDs: US1, US2 (power supply), Fail (alarm contact),
2 LEDs per Ethernet port (Link/Activity and Speed)

24 V DC (redundant)
3.6 V_{PP}
12 V DC ... 57 V DC
455 mA (at U_S = 24 V DC)

85 mm / 130 mm / 115 mm
IP20
-40°C ... 70°C
10% ... 95% (non-condensing)
EN 61000-6-4
EN 61000-6-2
Class A product, see page 527

Ordering data

Type	Order No.	Pcs./Pkt.
FL SWITCH 2316	2702909	1
FL SWITCH 2316 PN	1031673	1

Accessories

SD FLASH 2GB	2988162	1

2000 series Managed Switches with fiberglass interfaces

2200 Managed Switches offer a wide range of options for creating networks with fiberglass connections. The range comprises multimode or single mode versions with SC or ST connections and satisfies various approvals for maritime applications and process technology.

Features:

- PROFINET device
- Media Redundancy Protocol (MRP) in accordance with IEC 62439
- Extended temperature range (-40°C ... +70°C)
- Redundant power supply
- IGMP snooping/querier
- HTTPS/SNMPv3
- Port-based/pool-based DHCP server, DHCP option 82
- Simple Network Time Protocol (SNTP)
- Gigabit versions support jumbo frames
- MAC-based port security
- RADIUS authentication (IEEE 802.1x)

7 RJ45 ports and 1 fiber optic port (multimode)

Ex:

Technical data

Ethernet interface		
Number of ports		7 (RJ45 ports)
Transmission speed		10/100 Mbps
Fiber optic interface		
Number of ports		1 (SC multimode)
Transmission speed		100 Mbps (full duplex)
Wavelength		1300 nm
Transmission distance		11000 m (fiberglass with F-G 62.5/125 0.7 dB/km F1000)
Function		
Basic functions		Store-and-forward switch, complies with IEEE 802.3
Management		Web-based management (HTTP/HTTPS) SNMPv1/v2/v3 Command-line interface (Telnet, SSH)
Diagnostic function		RMON History LLDP (Link Layer Discovery Protocol) SNMP-Traps N:1-Portmirroring ACD (Address Conflict Detection)
Redundancy		MRP (Media Redundancy Protocol) RSTP (Rapid Spanning Tree Protocol) FRD (Fast Ring Detection) Large Tree Support
Status and diagnostic indicators		LEDs: US1, US2 (power supply), Fail (alarm contact), 2 LEDs per Ethernet port (Link/Activity and Speed)
Power supply		
Supply voltage		24 V DC (redundant)
Residual ripple		3.6 V_{PP}
Supply voltage range		9 V DC ... 57 V DC
Typical current consumption		220 mA (at U_S = 24 V DC)
General data		
Dimensions	W / H / D	45 mm / 130 mm / 115 mm
Degree of protection		IP20
Ambient temperature (operation)		-40°C ... 70°C
Permissible humidity (operation)		10% ... 95% (non-condensing)
Noise emission		EN 61000-6-4
Noise immunity		EN 61000-6-2
EMC note		Class A product, see page 527

Ordering data

Description	Type	Order No.	Pcs./Pkt.
Ethernet switch - 7 RJ45 ports, 1 SC FO port - 6 RJ45 ports, 2 SC FO ports - 6 RJ45 ports, 2 ST FO ports	**FL SWITCH 2207-FX**	2702328	1

Accessories

Parameterization memory, Flash card without license	**SD FLASH 2GB**	2988162	1

7 RJ45 ports and
1 fiber optic port (single mode)

Ex:

Technical data

7 (RJ45 ports) 10/100 Mbps
1 (SC single mode) 100 Mbps (full duplex) 1300 nm 36000 m (fiberglass with F-G 9/125 0.36 dB/km)
Store-and-forward switch, complies with IEEE 802.3 Web-based management (HTTP/HTTPS) SNMPv1/v2/v3 Command-line interface (Telnet, SSH) RMON History LLDP (Link Layer Discovery Protocol) SNMP-Traps N:1-Portmirroring ACD (Address Conflict Detection) MRP (Media Redundancy Protocol) RSTP (Rapid Spanning Tree Protocol) FRD (Fast Ring Detection) Large Tree Support LEDs: US1, US2 (power supply), Fail (alarm contact), 2 LEDs per Ethernet port (Link/Activity and Speed)
24 V DC (redundant) 3.6 V_{PP} 9 V DC ... 57 V DC 210 mA (at U_S = 24 V DC)
45 mm / 130 mm / 115 mm IP20 -40°C ... 70°C 10% ... 95% (non-condensing) EN 61000-6-4 EN 61000-6-2 Class A product, see page 527

Ordering data

Type	Order No.	Pcs./Pkt.
FL SWITCH 2207-FX SM	2702329	1

Accessories

SD FLASH 2GB	2988162	1

6 RJ45 ports and
2 fiber optic ports (multimode)

Ex:

Technical data

FL SWITCH 2206-2FX	FL SWITCH 2206-2FX ST
6 (RJ45 ports) 10/100 Mbps	
2 (SC multimode)	2 (ST multimode)
100 Mbps (full duplex) 1300 nm 11000 m (fiberglass with F-G 62.5/125 0.7 dB/km F1000)	
Store-and-forward switch, complies with IEEE 802.3 Web-based management (HTTP/HTTPS) SNMPv1/v2/v3 Command-line interface (Telnet, SSH) RMON History LLDP (Link Layer Discovery Protocol) SNMP-Traps N:1-Portmirroring ACD (Address Conflict Detection) MRP (Media Redundancy Protocol) RSTP (Rapid Spanning Tree Protocol) FRD (Fast Ring Detection) Large Tree Support LEDs: US1, US2 (power supply), Fail (alarm contact), 2 LEDs per Ethernet port (Link/Activity and Speed)	
24 V DC (redundant) 3.6 V_{PP} 9 V DC ... 57 V DC 255 mA (at U_S = 24 V DC)	
45 mm / 130 mm / 115 mm IP20 -40°C ... 70°C 10% ... 95% (non-condensing) EN 61000-6-4 EN 61000-6-2 Class A product, see page 527	

Ordering data

Type	Order No.	Pcs./Pkt.
FL SWITCH 2206-2FX	2702330	1
FL SWITCH 2206-2FX ST	2702332	1

Accessories

SD FLASH 2GB	2988162	1

6 RJ45 ports and
2 fiber optic ports (single mode)

Ex:

Technical data

FL SWITCH 2206-2FX SM	FL SWITCH 2206-2FX SM ST
6 (RJ45 ports) 10/100 Mbps	
2 (SC single mode)	2 (ST single mode)
100 Mbps (full duplex) 1300 nm 36000 m (fiberglass with F-G 9/125 0.36 dB/km)	
Store-and-forward switch, complies with IEEE 802.3 Web-based management (HTTP/HTTPS) SNMPv1/v2/v3 Command-line interface (Telnet, SSH) RMON History LLDP (Link Layer Discovery Protocol) SNMP-Traps N:1-Portmirroring ACD (Address Conflict Detection) MRP (Media Redundancy Protocol) RSTP (Rapid Spanning Tree Protocol) FRD (Fast Ring Detection) Large Tree Support LEDs: US1, US2 (power supply), Fail (alarm contact), 2 LEDs per Ethernet port (Link/Activity and Speed)	
24 V DC (redundant) 3.6 V_{PP} 9 V DC ... 57 V DC 235 mA (at U_S = 24 V DC)	
45 mm / 130 mm / 115 mm IP20 -40°C ... 70°C 10% ... 95% (non-condensing) EN 61000-6-4 EN 61000-6-2 Class A product, see page 527	

Ordering data

Type	Order No.	Pcs./Pkt.
FL SWITCH 2206-2FX SM	2702331	1
FL SWITCH 2206-2FX SM ST	2702333	1

Accessories

SD FLASH 2GB	2988162	1

2000 series Managed Switches with fiberglass interfaces

The 2200 Managed Switches offer a wide range of options for creating networks with fiberglass connections. The portfolio includes multimode or single mode versions with SC connections and satisfies various approvals for maritime applications and process technology.

14 RJ45 ports and 2 fiber optic ports (multimode)

14 RJ45 ports and 2 fiber optic ports (single mode)

		Technical data	Technical data
Ethernet interface			
Number of ports		14 (RJ45 ports)	14 (RJ45 ports)
Transmission speed		10/100 Mbps	10/100 Mbps
Fiber optic interface			
Number of ports		2 (SC multimode)	2 (SC single mode)
Transmission speed		100 Mbps (full duplex)	100 Mbps (full duplex)
Wavelength		1300 nm	1300 nm
Transmission distance		11000 m (fiberglass with F-G 62.5/125 0.7 dB/km F1000)	36000 m (fiberglass with F-G 9/125 0.36 dB/km)
Function			
Basic functions		Store-and-forward switch, complies with IEEE 802.3	Store-and-forward switch, complies with IEEE 802.3
Management		Web-based management (HTTP/HTTPS) SNMPv1/v2/v3 Command-line interface (Telnet, SSH)	Web-based management (HTTP/HTTPS) SNMPv1/v2/v3 Command-line interface (Telnet, SSH)
Diagnostic function		RMON History LLDP (Link Layer Discovery Protocol) SNMP-Traps N:1-Portmirroring ACD (Address Conflict Detection)	RMON History LLDP (Link Layer Discovery Protocol) SNMP-Traps N:1-Portmirroring ACD (Address Conflict Detection)
Redundancy		MRP (Media Redundancy Protocol) RSTP (Rapid Spanning Tree Protocol) FRD (Fast Ring Detection) Large Tree Support	MRP (Media Redundancy Protocol) RSTP (Rapid Spanning Tree Protocol) FRD (Fast Ring Detection) Large Tree Support
Status and diagnostic indicators		LEDs: US1, US2 (power supply), Fail (alarm contact), 2 LEDs per Ethernet port (Link/Activity and Speed)	LEDs: US1, US2 (power supply), Fail (alarm contact), 2 LEDs per Ethernet port (Link/Activity and Speed)
Power supply			
Supply voltage		24 V DC (redundant)	24 V DC (redundant)
Residual ripple		3.6 V_{PP}	3.6 V_{PP}
Supply voltage range		12 V DC ... 57 V DC	12 V DC ... 57 V DC
Typical current consumption		375 mA (at U_S = 24 V DC)	375 mA (at U_S = 24 V DC)
General data			
Dimensions	W / H / D	85 mm / 130 mm / 115 mm	85 mm / 130 mm / 115 mm
Degree of protection		IP20	IP20
Ambient temperature (operation)		-40°C ... 70°C	-40°C ... 70°C
Permissible humidity (operation)		10% ... 95% (non-condensing)	10% ... 95% (non-condensing)
Noise emission		EN 61000-6-4	EN 61000-6-4
Noise immunity		EN 61000-6-2	EN 61000-6-2
EMC note		Class A product, see page 527	Class A product, see page 527

	Ordering data			Ordering data		
Description	Type	Order No.	Pcs./Pkt.	Type	Order No.	Pcs./Pkt.
Ethernet switch						
	FL SWITCH 2214-2FX	2702905	1	**FL SWITCH 2214-2FX SM**	2702906	1
	Accessories			**Accessories**		
Parameterization memory, Flash card without license	**SD FLASH 2GB**	2988162	1	**SD FLASH 2GB**	2988162	1

2000 series Managed Switches with SFP fiberglass connections

2200 and 2300 Managed Switches with SFP ports guarantee maximum flexibility in applications. Depending on the chosen SFP module, cable lengths of up to 80 km are possible.

6 RJ45 ports and 2 SFP ports 10/100 Mbps

6 RJ45 ports and 2 SFP ports 10/100/1000 Mbps

	Technical data	Technical data
Ethernet interface		
Number of ports	6 (RJ45 ports)	6 (RJ45 ports)
Transmission speed	10/100 Mbps	10/100/1000 Mbps
Fiber optic interface		
Number of ports	2 (SFP ports)	2 (SFP ports)
Transmission speed	100 Mbps (full duplex)	100/1000 Mbps (full duplex)
Transmission distance	up to 40 km (depending on the fiber/SFP module used)	up to 80 km (depending on the fiber/SFP module used)
Function		
Basic functions	Store-and-forward switch, complies with IEEE 802.3	Store-and-forward switch, complies with IEEE 802.3
Management	Web-based management (HTTP/HTTPS) SNMPv1/v2/v3 Command-line interface (Telnet, SSH)	Web-based management (HTTP/HTTPS) SNMPv1/v2/v3 Command-line interface (Telnet, SSH)
Diagnostic function	RMON History LLDP (Link Layer Discovery Protocol) SNMP-Traps ACD (Address Conflict Detection) N:1-Portmirroring	RMON History LLDP (Link Layer Discovery Protocol) SNMP-Traps ACD (Address Conflict Detection) N:1-Portmirroring
Redundancy	MRP (Media Redundancy Protocol) RSTP (Rapid Spanning Tree Protocol) FRD (Fast Ring Detection) Large Tree Support	MRP (Media Redundancy Protocol) RSTP (Rapid Spanning Tree Protocol) FRD (Fast Ring Detection) Large Tree Support
Status and diagnostic indicators	LEDs: US1, US2 (power supply), Fail (alarm contact), 2 LEDs per Ethernet port (Link/Activity and Speed)	LEDs: US1, US2 (power supply), Fail (alarm contact), 2 LEDs per Ethernet port (Link/Activity and Speed)
Power supply		
Supply voltage	24 V DC (redundant)	24 V DC (redundant)
Residual ripple	3.6 V_{PP}	3.6 V_{PP}
Supply voltage range	12 V DC ... 57 V DC	12 V DC ... 57 V DC
Typical current consumption	280 mA (at U_S = 24 V DC)	280 mA (at U_S = 24 V DC)
General data		
Dimensions W / H / D	45 mm / 130 mm / 115 mm	45 mm / 130 mm / 115 mm
Degree of protection	IP20	IP20
Ambient temperature (operation)	-40°C ... 70°C	-40°C ... 70°C
Permissible humidity (operation)	10% ... 95% (non-condensing)	10% ... 95% (non-condensing)
Noise emission	EN 61000-6-4	EN 61000-6-4
Noise immunity	EN 61000-6-2	EN 61000-6-2
EMC note	Class A product, see page 527	Class A product, see page 527

	Ordering data			Ordering data		
Description	Type	Order No.	Pcs./Pkt.	Type	Order No.	Pcs./Pkt.
Ethernet switch						
	FL SWITCH 2206-2SFX	2702969	1	**FL SWITCH 2306-2SFP**	2702970	1
- Preconfigured for PROFINET	**FL SWITCH 2206-2SFX PN**	1044028	1	**FL SWITCH 2306-2SFP PN**	1009222	1
	Accessories			**Accessories**		
Parameterization memory, Flash card without license	**SD FLASH 2GB**	2988162	1	**SD FLASH 2GB**	2988162	1
SFP module	**See page 332**			**See page 332**		

2000 series Managed Switches with SFP fiberglass connections

2200 and 2300 Managed Switches with SFP ports guarantee maximum flexibility in applications. Depending on the chosen SFP module, cable lengths of up to 80 km are possible.

Features:

- PROFINET device
- Media Redundancy Protocol (MRP) in accordance with IEC 62439
- Extended temperature range (-40°C ... +70°C)
- Redundant power supply
- IGMP snooping/querier
- HTTPS/SNMPv3
- Port-based/pool-based DHCP server, DHCP option 82
- Simple Network Time Protocol (SNTP)
- Preconfigured versions for PROFINET applications
- Gigabit versions support jumbo frames
- MAC-based port security
- RADIUS authentication (IEEE 802.1x)

14 RJ45 ports and 2 SFP ports 10/100 Mbps

Ex:

Technical data

Ethernet interface		
Number of ports		14 (RJ45 ports)
Transmission speed		10/100 Mbps
Fiber optic interface		
Number of ports		2 (SFP ports)
Transmission speed		100 Mbps (full duplex)
Transmission distance		up to 40 km (depending on the fiber/SFP module used)
Fiber optic interface		
Number of ports		-
Transmission speed		-
Transmission distance		-
Function		
Basic functions		Store-and-forward switch, complies with IEEE 802.3
Management		Web-based management (HTTP/HTTPS) SNMPv1/v2/v3 Command-line interface (Telnet, SSH)
Diagnostic function		RMON History LLDP (Link Layer Discovery Protocol) SNMP-Traps N:1-Portmirroring ACD (Address Conflict Detection)
Redundancy		MRP (Media Redundancy Protocol) RSTP (Rapid Spanning Tree Protocol) FRD (Fast Ring Detection) Large Tree Support
Status and diagnostic indicators		LEDs: US1, US2 (power supply), Fail (alarm contact), 2 LEDs per Ethernet port (Link/Activity and Speed)
Power supply		
Supply voltage		24 V DC (redundant)
Residual ripple		3.6 V_{PP}
Supply voltage range		12 V DC ... 57 V DC
Typical current consumption		325 mA (at U_S = 24 V DC)
General data		
Dimensions	W / H / D	85 mm / 130 mm / 115 mm
Degree of protection		IP20
Ambient temperature (operation)		-40°C ... 70°C
Permissible humidity (operation)		10% ... 95% (non-condensing)
Noise emission		EN 61000-6-4
Noise immunity		EN 61000-6-2
EMC note		

Ordering data

Description	Type	Order No.	Pcs./Pkt.
Ethernet switch			
	FL SWITCH 2214-2SFX	1006188	1
- Preconfigured for PROFINET	**FL SWITCH 2214-2SFX PN**	1044030	1

Accessories

Parameterization memory, Flash card without license	**SD FLASH 2GB**	2988162	1

SFP module **See page 332**

14 RJ45 ports and 2 SFP ports 10/100/1000 Mbps

Ex:

Technical data

14 (RJ45 ports) 10/100/1000 Mbps
2 (SFP ports) 100/1000 Mbps (full duplex) up to 80 km (depending on the fiber/SFP module used)
- - -
Store-and-forward switch, complies with IEEE 802.3
Web-based management (HTTP/HTTPS) SNMPv1/v2/v3 Command-line interface (Telnet, SSH) RMON History LLDP (Link Layer Discovery Protocol) SNMP-Traps N:1-Portmirroring ACD (Address Conflict Detection) MRP (Media Redundancy Protocol) RSTP (Rapid Spanning Tree Protocol) FRD (Fast Ring Detection) Large Tree Support LEDs: US1, US2 (power supply), Fail (alarm contact), 2 LEDs per Ethernet port (link/activity and speed), PROFINET status LEDs (BF, SF)
24 V DC (redundant) 3.6 V_{PP} 12 V DC ... 57 V DC 460 mA (at U_S = 24 V DC)
85 mm / 130 mm / 115 mm IP20 -40°C ... 70°C 10% ... 95% (non-condensing) EN 61000-6-4 EN 61000-6-2 Class A product, see page 527

Ordering data

Type	Order No.	Pcs./Pkt.
FL SWITCH 2314-2SFP	1006191	1
FL SWITCH 2314-2SFP PN	1031683	1

Accessories

SD FLASH 2GB	2988162	1

See page 332

4 / 12 RJ45 ports, 2 SFP ports, and 2 Fast Ethernet combo ports 10/100 Mbps

Ex:

Technical data

FL SWITCH 2204-2TC-2SFX	FL SWITCH 2212-2TC-2SFX
4 (RJ45 ports)	12 (RJ45 ports)
10/100 Mbps	
2 (SFP ports) 100 Mbps (full duplex) up to 40 km (depending on the fiber/SFP module used)	
2 (Combo ports) 10/100 Mbps (full duplex) up to 40 km (depending on the fiber/SFP module used)	
Store-and-forward switch, complies with IEEE 802.3	
Web-based management (HTTP/HTTPS) SNMPv1/v2/v3 Command-line interface (Telnet, SSH) RMON History LLDP (Link Layer Discovery Protocol) SNMP-Traps N:1-Portmirroring ACD (Address Conflict Detection) MRP (Media Redundancy Protocol) RSTP (Rapid Spanning Tree Protocol) FRD (Fast Ring Detection) Large Tree Support LEDs: US1, US2 (power supply), Fail (alarm contact), 2 LEDs per Ethernet port (Link/Activity and Speed)	
24 V DC (redundant) 3.6 V_{PP} 12 V DC ... 57 V DC	
250 mA (at U_S = 24 V DC)	360 mA (at U_S = 24 V DC)
45 mm / 130 mm / 115 mm	85 mm / 130 mm / 115 mm
IP20 -40°C ... 70°C 10% ... 95% (non-condensing) EN 61000-6-4 EN 61000-6-2 Class A product, see page 527	

Ordering data

Type	Order No.	Pcs./Pkt.
FL SWITCH 2204-2TC-2SFX	2702334	1
FL SWITCH 2212-2TC-2SFX	2702907	1

Accessories

See page 332

4 / 12 RJ45 ports, 2 SFP ports, and 2 Gigabit combo ports 10/100/1000 Mbps

Ex:

Technical data

FL SWITCH 2304-2GC-2SFP	FL SWITCH 2312-2GC-2SFP
4 (RJ45 ports)	12 (RJ45 ports)
10/100/1000 Mbps	
2 (SFP ports) 100/1000 Mbps (full duplex) up to 80 km (depending on the fiber/SFP module used)	
2 (Combo ports) 10/100/1000 Mbps (full duplex) up to 80 km (depending on the fiber/SFP module used)	
Store-and-forward switch, complies with IEEE 802.3	
Web-based management (HTTP/HTTPS) SNMPv1/v2/v3 Command-line interface (Telnet, SSH) RMON History LLDP (Link Layer Discovery Protocol) SNMP-Traps N:1-Portmirroring ACD (Address Conflict Detection) MRP (Media Redundancy Protocol) RSTP (Rapid Spanning Tree Protocol) FRD (Fast Ring Detection) Large Tree Support LEDs: US1, US2 (power supply), Fail (alarm contact), 2 LEDs per Ethernet port (Link/Activity and Speed)	
24 V DC (redundant) 3.6 V_{PP} 12 V DC ... 57 V DC	
290 mA (at U_S = 24 V DC)	475 mA (at U_S = 24 V DC)
45 mm / 130 mm / 115 mm	85 mm / 130 mm / 115 mm
IP20 -40°C ... 70°C 10% ... 95% (non-condensing) EN 61000-6-4 EN 61000-6-2 Class A product, see page 527	

Ordering data

Type	Order No.	Pcs./Pkt.
FL SWITCH 2304-2GC-2SFP	2702653	1
FL SWITCH 2312-2GC-2SFP	2702910	1

Accessories

See page 332

3000 series Managed Switches

The **FL SWITCH 3000** industrial Managed Switches provide scalable power for application flexibility and ease of use.

Features:

– Standard devices (-10°C ... +60°C) and devices with wide temperature range (-40°C ... +75°C) available
– Extended Ring Redundancy provides a 15 ms recovery time
– Extensive IEEE and security functions

5/8 RJ45 ports

16 RJ45 ports

Ex:

Ex:

		Technical data		Technical data	
		FL SWITCH 3005	FL SWITCH 3008T	FL SWITCH 3016	FL SWITCH 3016T
Ethernet interface					
Number of ports		5 (RJ45 ports)	8 (RJ45 ports)	16 (RJ45 ports)	
Transmission speed		10/100 Mbps		10/100 Mbps	
Fiber optic interface					
Number of ports		-		-	
Transmission speed		-		-	
Wavelength		-		-	
Transmission distance		-		-	
Function					
Basic functions		Store and forward switch, Extended Ring and IEEE redundancy, Multicast control, IGMP snooping, trunking, Port and Tagging VLANs, Port and IEEE 802.1x security, SNMP V3 and Https security, SNTP, web customization, user accounts		Store and forward switch, Extended Ring and IEEE redundancy, Multicast control, IGMP snooping, trunking, Port and Tagging VLANs, Port and IEEE 802.1x security, SNMP V3 and Https security, SNTP, web customization, user accounts	
Status and diagnostic indicators		LEDs: U_{S1}, U_{S2} (redundant voltage supply), link and activity per port		LEDs: U_{S1}, U_{S2} (redundant voltage supply), link and activity per port	
Power supply					
Supply voltage		24 V DC (redundant)		24 V DC (redundant)	
Residual ripple		3.6 V_{PP}		3.6 V_{PP}	
Supply voltage range		12 V DC ... 48 V DC		12 V DC ... 48 V DC	
Typical current consumption		200 mA (at U_S = 24 V DC)	210 mA (at U_S = 24 V DC)	312 mA (at U_S = 24 V DC)	
General data					
Dimensions	W / H / D	54.4 mm / 146.4 mm / 125 mm		66 mm / 173 mm / 140 mm	
Degree of protection		IP20		IP20	
Ambient temperature (operation)		-10°C ... 60°C	-40°C ... 75°C	-10°C ... 60°C	-40°C ... 75°C
Permissible humidity (operation)		5% ... 95% (non-condensing)		5% ... 95% (non-condensing)	
Noise emission		EN 61000-6-4		EN 61000-6-4	
Noise immunity		EN 61000-6-2:2005		EN 61000-6-2:2005	
EMC note		Class A product, see page 527		Class A product, see page 527	

	Ordering data			Ordering data		
Description	Type	Order No.	Pcs./Pkt.	Type	Order No.	Pcs./Pkt.
Ethernet switch						
- 5 RJ45 ports	**FL SWITCH 3005**	2891030	1			
- 8 RJ45 ports	**FL SWITCH 3008**	2891031	1			
- 16 RJ45 ports				**FL SWITCH 3016**	2891058	1
Ethernet switch, wide temperature						
- 5 RJ45 ports	**FL SWITCH 3005T**	2891032	1			
- 8 RJ45 ports	**FL SWITCH 3008T**	2891035	1			
- 16 RJ45 ports				**FL SWITCH 3016T**	2891059	1
- 4 RJ45 ports, 1 SC FO port						
- 4 RJ45 ports, 1 ST FO port						
- 6 RJ45 ports, 2 SC FO ports						
- 6 RJ45 ports, 2 ST FO ports						

4 RJ45 ports and
1 fiber optic port (multimode)

Ex:

Technical data

FL SWITCH 3004T-FX	FL SWITCH 3004T-FX ST
4 (RJ45 ports) 10/100 Mbps	
1 (SC multimode)	1 (ST multimode)
100 Mbps (full duplex) 1300 nm 12.1 km (fiberglass with F-G 62.5/125 0.7 dB/km F1000)	
Store and forward switch, Extended Ring and IEEE redundancy, Multicast control, IGMP snooping, trunking, Port and Tagging VLANs, Port and IEEE 802.1x security, SNMP V3 and Https security, SNTP, web customization, user accounts LEDs: U_{S1}, U_{S2} (redundant voltage supply), link and activity per port	
24 V DC (redundant) 3.6 V_{PP} 12 V DC ... 48 V DC 230 mA (at U_S = 24 V DC)	
54.4 mm / 146.4 mm / 125 mm IP20 -40°C ... 75°C 5% ... 95% (non-condensing) EN 61000-6-4 EN 61000-6-2:2005 Class A product, see page 527	

Ordering data

Type	Order No.	Pcs./Pkt.
FL SWITCH 3004T-FX	2891033	1
FL SWITCH 3004T-FX ST	2891034	1

6 RJ45 ports and
2 fiber optic ports (multimode)

Ex:

Technical data

FL SWITCH 3006T-2FX	FL SWITCH 3006T-2FX ST
6 (RJ45 ports) 10/100 Mbps	
2 (SC multimode)	2 (ST multimode)
100 Mbps (full duplex) 1300 nm 12.1 km (fiberglass with F-G 62.5/125 0.7 dB/km F1000)	
Store and forward switch, Extended Ring and IEEE redundancy, Multicast control, IGMP snooping, trunking, Port and Tagging VLANs, Port and IEEE 802.1x security, SNMP V3 and Https security, SNTP, web customization, user accounts LEDs: U_{S1}, U_{S2} (redundant voltage supply), link and activity per port	
24 V DC (redundant) 3.6 V_{PP} 12 V DC ... 48 V DC 330 mA (at U_S = 24 V DC)	
54.4 mm / 146.4 mm / 125 mm IP20 -40°C ... 75°C 5% ... 95% (non-condensing) EN 61000-6-4 EN 61000-6-2:2005 Class A product, see page 527	

Ordering data

Type	Order No.	Pcs./Pkt.
FL SWITCH 3006T-2FX	2891036	1
FL SWITCH 3006T-2FX ST	2891037	1

6 RJ45 ports and
2 fiber optic ports (single mode)

Ex:

Technical data

6 (RJ45 ports) 10/100 Mbps
2 (SC single mode) 100 Mbps (full duplex) 1300 nm 40 km (fiberglass with F-G 9/125 0.36 dB/km)
Store and forward switch, Extended Ring and IEEE redundancy, Multicast control, IGMP snooping, trunking, Port and Tagging VLANs, Port and IEEE 802.1x security, SNMP V3 and Https security, SNTP, web customization, user accounts LEDs: U_{S1}, U_{S2} (redundant voltage supply), link and activity per port
24 V DC (redundant) 3.6 V_{PP} 12 V DC ... 48 V DC 330 mA (at U_S = 24 V DC)
54.4 mm / 146.4 mm / 125 mm IP20 -40°C ... 75°C 5% ... 95% (non-condensing) EN 61000-6-4 EN 61000-6-2:2005 Class A product, see page 527

Ordering data

Type	Order No.	Pcs./Pkt.
FL SWITCH 3006T-2FX SM	2891060	1

Managed Switches for IEC 61850 applications

The 3000E Managed Switches are particularly suitable for use in energy systems and meet the stringent requirements of standards IEC 61850-3 and IEEE 1613. They provide round-the-clock reliable operation under extreme environmental conditions thanks to their very high immunity to electromagnetic and electrostatic interference.

Features:

- Extended temperature range (-40°C ... +75°C)
- High shock and vibration resistance
- Extended Ring Redundancy provides a 15 ms recovery time
- Extensive IEEE and security functions

IEC 61850-3

16 RJ45 ports

Technical data

Ethernet interface		
Number of ports		16 (RJ45 ports)
Transmission speed		10/100 Mbps
Fiber optic interface		
Number of ports		-
Transmission speed		-
Wavelength		-
Transmission distance		-
Function		
Basic functions		Store and forward switch, Extended Ring and IEEE redundancy, Multicast control, IGMP snooping, trunking, Port and Tagging VLANs, Port and IEEE 802.1x security, SNMP V3 and Https security, SNTP, web customization, user accounts
Status and diagnostic indicators		LEDs: U_{S1}, U_{S2} (redundant voltage supply), link and activity per port
Network expansion parameters		
Cascading depth		Network, linear, and star structure: any
Maximum cable length (twisted pair)		100 m
Power supply		
Supply voltage		24 V DC (redundant)
Residual ripple		3.6 V_{PP}
Supply voltage range		12 V DC ... 48 V DC
Typical current consumption		312 mA (at U_S = 24 V DC)
General data		
Dimensions	W / H / D	78.6 mm / 145 mm / 125 mm
Degree of protection		IP20
Ambient temperature (operation)		-40°C ... 70°C
Permissible humidity (operation)		5% ... 95% (non-condensing)
Noise emission		EN 61000-6-4
Noise immunity		IEC 61850-3, IEEE 1613, EN 61000-6-2: 2005
EMC note		Class A product, see page 527

Ordering data

Description	Type	Order No.	Pcs./Pkt.
Managed Switch - 16 RJ45 ports - 12 RJ45 ports, 2 SC FO ports - 12 RJ45 ports, 2 SFP FO ports	**FL SWITCH 3016E**	2891066	1

Accessories

Redundancy module			
- 3 RJ45 ports	**FL RED 2003E PRP**	2701863	1
- 1 RJ45 port, 2 LC fiber optic ports (multimode)	**FL RED 2001E PRP 2LC**	2701864	1
SFP module			

IEC 61850-3

12 RJ45 ports and 2 fiber optic ports (multimode)

IEC 61850-3

12 RJ45 ports and 2 fiber optic ports (single mode)

IEC 61850-3

12 RJ45 ports and 2 SFP ports

Technical data

12 (RJ45 ports) 10/100 Mbps	
2 (SC multimode) 100 Mbps (full duplex) 1300 nm 8 km (fiberglass with F-G 62.5/125 0.7 dB/km F1000)	
Store and forward switch, Extended Ring and IEEE redundancy, Multicast control, IGMP snooping, trunking, Port and Tagging VLANs, Port and IEEE 802.1x security, SNMP V3 and Https security, SNTP, web customization, user accounts LEDs: U_{S1}, U_{S2} (redundant voltage supply), link and activity per port	
Network, linear, and star structure: any 100 m	
24 V DC (redundant) 3.6 V_{PP} 12 V DC ... 48 V DC 354 mA (at U_S = 24 V DC)	
78.6 mm / 145 mm / 125 mm IP20 -40°C ... 70°C 5% ... 95% (non-condensing) EN 61000-6-4 IEC 61850-3, IEEE 1613, EN 61000-6-2: 2005 Class A product, see page 527	

Ordering data

Type	Order No.	Pcs./Pkt.
FL SWITCH 3012E-2FX	2891120	1

Accessories

FL RED 2003E PRP	2701863	1
FL RED 2001E PRP 2LC	2701864	1

Technical data

12 (RJ45 ports) 10/100 Mbps	
2 (SC single mode) 100 Mbps (full duplex) 1300 nm 40 km (fiberglass with F-G 9/125 0.36 dB/km)	
Store and forward switch, Extended Ring and IEEE redundancy, Multicast control, IGMP snooping, trunking, Port and Tagging VLANs, Port and IEEE 802.1x security, SNMP V3 and Https security, SNTP, web customization, user accounts LEDs: U_{S1}, U_{S2} (redundant voltage supply), link and activity per port	
Network, linear, and star structure: any 100 m	
24 V DC (redundant) 3.6 V_{PP} 12 V DC ... 48 V DC 320 mA (at U_S = 24 V DC)	
78.6 mm / 145 mm / 125 mm IP20 -40°C ... 70°C 5% ... 95% (non-condensing) EN 61000-6-4 IEC 61850-3, IEEE 1613, EN 61000-6-2: 2005 Class A product, see page 527	

Ordering data

Type	Order No.	Pcs./Pkt.
FL SWITCH 3012E-2FX SM	2891119	1

Accessories

FL RED 2003E PRP	2701863	1
FL RED 2001E PRP 2LC	2701864	1

Technical data

12 (RJ45 ports) 10/100 Mbps	
2 (SFP ports) 100 Mbps (full duplex) - up to 40 km (depending on the fiber/SFP module used)	
Store and forward switch, Extended Ring and IEEE redundancy, Multicast control, IGMP snooping, trunking, Port and Tagging VLANs, Port and IEEE 802.1x security, SNMP V3 and Https security, SNTP, web customization, user accounts LEDs: U_{S1}, U_{S2} (redundant voltage supply), link and activity per port	
Network, linear, and star structure: any 100 m	
24 V DC (redundant) 3.6 V_{PP} 12 V DC ... 48 V DC 312 mA (at U_S = 24 V DC)	
78.6 mm / 145 mm / 125 mm IP20 -40°C ... 70°C 5% ... 95% (non-condensing) EN 61000-6-4 IEC 61850-3, IEEE 1613, EN 61000-6-2: 2005 Class A product, see page 527	

Ordering data

Type	Order No.	Pcs./Pkt.
FL SWITCH 3012E-2SFX	2891067	1

Accessories

FL RED 2003E PRP	2701863	1
FL RED 2001E PRP 2LC	2701864	1

See page 332

4000 series Managed Switches with Gigabit uplink ports

The **FL SWITCH 4000** Managed Switches feature flexible, scalable performance while maintaining ease of operation.

Features:

- 2 Gigabit ports for high-performance data trunk lines
- Extended temperature range (-40°C ... +75°C)
- Extended Ring Redundancy provides a 15 ms recovery time
- Flexible fiberglass interface options

8 RJ45 ports and 2 SFP ports

10 / 14 RJ45 ports and 4 / 2 FO ports

Ex:

Ex:

	Technical data	Technical data	
		FL SWITCH 4008T-2GT-4FX SM	FL SWITCH 4012T-2GT-2FX
Ethernet interface			
Number of ports	8 (RJ45 ports)	8 (RJ45 ports)	12 (RJ45 ports)
Transmission speed	10/100 Mbps	10/100 Mbps	
Gigabit Ethernet interface			
Number of ports	-	2 (RJ45 ports)	
Transmission speed	-	10/100/1000 Mbps	
Fiber optic interface			
Number of ports	2 (SFP ports)	4 (SC single mode)	2 (SC multimode)
Transmission speed	1000 Mbps (full duplex)	100 Mbps (full duplex)	
Wavelength	-	1300 nm	
Transmission distance	up to 80 km (depending on the fiber/SFP module used)	40 km (fiberglass with F-G 9/125 0.36 dB/km)	8 km (fiberglass with F-G 62.5/125 0.7 dB/km F1000)
Function			
Basic functions	Store and forward switch, Extended Ring and IEEE redundancy, Multicast control, IGMP snooping, trunking, Port and Tagging VLANs, Port and IEEE 802.1x security, SNMP V3 and Https security, SNTP, web customization, user accounts	Store and forward switch, Extended Ring and IEEE redundancy, Multicast control, IGMP snooping, trunking, Port and Tagging VLANs, Port and IEEE 802.1x security, SNMP V3 and Https security, SNTP, web customization, user accounts	
Status and diagnostic indicators	LEDs: U_{S1}, U_{S2} (redundant voltage supply), link and activity per port	LEDs: U_{S1}, U_{S2} (redundant voltage supply), link and activity per port	
Power supply			
Supply voltage	24 V DC (hazardous locations)	24 V DC (redundant)	
Residual ripple	3.6 V_{PP}	3.6 V_{PP}	
Supply voltage range	12 V DC ... 48 V DC (ordinary locations)	12 V DC ... 48 V DC	
Typical current consumption	278 mA (at U_S = 24 V DC)	488 mA (at U_S = 24 V DC)	474 mA (at U_S = 24 V DC)
General data			
Dimensions W / H / D	54.4 mm / 146.4 mm / 125 mm	66 mm / 173 mm / 140 mm	
Degree of protection	IP20	IP20	
Ambient temperature (operation)	-40°C ... 75°C	-40°C ... 75°C	
Permissible humidity (operation)	5% ... 95% (non-condensing)	5% ... 95% (non-condensing)	
Noise emission	EN 61000-6-4	EN 61000-6-4	
Noise immunity	EN 61000-6-2:2005	EN 61000-6-2:2005	
EMC note	Class A product, see page 527	Class A product, see page 527	

	Ordering data			Ordering data		
Description	Type	Order No.	Pcs./Pkt.	Type	Order No.	Pcs./Pkt.
Ethernet switch, wide temperature						
- 8 RJ45 ports, 2 SFP FO ports, 1000 Mbps	**FL SWITCH 4008T-2SFP**	2891062	1			
- 10 RJ45 ports, 4 SC FO ports (single mode)				**FL SWITCH 4008T-2GT-4FX SM**	2891061	1
- 14 RJ45 ports, 2 SC FO ports (multimode)				**FL SWITCH 4012T-2GT-2FX**	2891063	1

	Accessories	Accessories
SFP module	See page 332	

Managed Power over Ethernet Switches

The 4000 series Managed PoE Switches enable you to connect up to 16 network devices. Up to eight end devices can be supplied with power and data via the same Ethernet cable.

Features:
- Up to 60 W per port
- PoE configuration options (watchdog, scheduler, etc.)
- Jumbo frame support

4 / 8 RJ45 PoE ports and 1 / 2 SFP ports

8 RJ45 PoE ports, 4 RJ45 ports, and 4 SFP ports

		Technical data		Technical data
		FL SWITCH 4000T-4POE-SFP	FL SWITCH 4000T-8POE-2SFP	
Ethernet interface				
Number of ports		-		4 (RJ45 ports)
Transmission speed		-		10/100/1000 Mbps
Ethernet interface (PoE)				
Number of ports		4 (RJ45 ports)	8 (RJ45 ports)	8 (RJ45 ports)
Transmission speed		10/100 Mbps		10/100/1000 Mbps
Connection method		RJ45		RJ45
Fiber optic interface				
Number of ports		1 (SFP port)	2 (SFP ports)	4 (SFP ports)
Transmission speed		100/1000 Mbps (full duplex)		1000 Mbps (full duplex)
Wavelength		-		-
Transmission distance		up to 80 km (depending on the fiber/SFP module used)		up to 80 km (depending on the fiber/SFP module used)
Function				
Basic functions		Store and forward switch, Extended Ring and IEEE redundancy, Multicast control, IGMP snooping, trunking, Port and Tagging VLANs, Port and IEEE 802.1x security, SNMP V3 and Https security, SNTP, web customization, user accounts, Modbus/TCP, PoE in accordance with IEEE 802.3at/af.		Store and forward switch, Extended Ring and IEEE redundancy, Multicast control, IGMP snooping, trunking, Port and Tagging VLANs, Port and IEEE 802.1x security, SNMP V3 and Https security, SNTP, web customization, user accounts, Modbus/TCP, PoE in accordance with IEEE 802.3at/af.
Status and diagnostic indicators		LEDs: U_{S1}, U_{S2} (redundant voltage supply), Alarm (alarm contact), Link/Activity and PoE per Ethernet port		LEDs: U_{S1}, U_{S2} (redundant voltage supply), Alarm (alarm contact), Link/Activity and PoE per Ethernet port
Power supply				
Supply voltage		55 V DC (redundant)		55 V DC (redundant)
Residual ripple		3.6 V_{PP}		3.6 V_{PP}
Supply voltage range		46 V DC ... 57 V DC (> 52 V DC for PoE+ or 60 W output recommended)		46 V DC ... 57 V DC (> 52 V DC for PoE+ or 60 W output recommended)
Typical current consumption		142 mA (U_S = 55 V DC)	205 mA (U_S = 55 V DC)	301 mA (U_S = 55 V DC)
General data				
Dimensions	W / H / D	75 mm / 170 mm / 152 mm		68 mm / 170 mm / 152 mm
Degree of protection		IP30		IP30
Ambient temperature (operation)		-40°C ... 75°C		-40°C ... 75°C
Permissible humidity (operation)		5% ... 95% (non-condensing)		5% ... 95% (non-condensing)
Noise emission		EN 61000-6-4		EN 61000-6-4
Noise immunity		EN 61000-6-2:2005		EN 61000-6-2:2005
EMC note		Class A product, see page 527		Class A product, see page 527

	Ordering data			Ordering data		
Description	Type	Order No.	Pcs./Pkt.	Type	Order No.	Pcs./Pkt.
- 4 RJ45 PoE ports, 1 SFP port	**FL SWITCH 4000T-4POE-SFP**	1026924	1			
- 8 RJ45 PoE ports, 2 SFP ports	**FL SWITCH 4000T-8POE-2SFP**	1026923	1			
- 8 RJ45 PoE ports, 4 RJ45 ports, 4 SFP ports				**FL SWITCH 4004T-8POE-4SFP**	1026922	1

	Accessories	Accessories
SFP module	**See page 332**	**See page 332**

Managed Switches, 19" rack-mount

The FL SWITCH 4800E series of Managed Switches for the automation of energy systems combine 24 ports of 10/100 Mbps device connections with four 10/100/1000 Mbps uplink ports for a total of 28 ports. Application flexibility is ensured with different combinations of copper/fiberglass and fiber types, Gigabit fiberglass/copper "combination" ports, and modular power supply units. Operation in extreme environments is ensured with a wide temperature range and an electrical noise immunity up to four times that of normal industrial switches.

Features:

- All switches have four Gigabit combo ports for network connections with high data throughput
- Flexible cabling using eight or 24 10/100 Mbps RJ45 connections with up to 16 fiberglass connections (100 Mbps)
- Extended Ring Redundancy provides a 15 ms recovery time
- Optional PRP redundancy modules provide a 0 ms recovery time
- Extensive IEEE and security functions
- Unique web customization, diagnostic viewing mode, and help pages simplify maintenance
- Supports up to two modular, hot-swappable power supplies for maximum power flexibility and uptime
- Electrical noise immunity in accordance with IEC 61850-3 and IEEE 1613
- Extended temperature range (-40°C ... +70°C)

Notes:

[1]) Requires the installation of at least one FL SWITCH 4800E-P1 or FL SWITCH 4800E-P5 for operation.

IEC 61850-3

24 RJ45 ports and
4 Gigabit combo (SFP or RJ45) ports

Technical data

Ethernet interface		
Number of ports		24 (RJ45 ports)
Transmission speed		10/100 Mbps
Ethernet (RJ45/FO combo)		
Interface		Ethernet (RJ45/FO combo)
Connection method		Combo
Note on the connection method		Auto negotiation and autocrossing (RJ45 interface)
Fiber optic interface		
Number of ports		-
Transmission speed		-
Connection method		-
Transmission distance		-
Function		
Basic functions		Store and forward switch, Extended Ring and IEEE redundancy, Multicast control, IGMP snooping, trunking, Port and Tagging VLANs, Port and IEEE 802.1x security, SNMP V3 and Https security, SNTP, web customization, user accounts
Status and diagnostic indicators		LEDs: U_{S1}, U_{S2} (redundant voltage supply), link and activity per port
Network expansion parameters		
Cascading depth		Network, linear, and star structure: any
Maximum cable length (twisted pair)		100 m
Power supply		
Power supply connection		From FL SWITCH 4800E-P...
General data		
Dimensions	W / H / D	442 mm / 44 mm / 375 mm
Degree of protection		IP20
Ambient temperature (operation)		-40°C ... 70°C
Permissible humidity (operation)		5% ... 95% (non-condensing)
Noise emission		EN 61000-6-4
Noise immunity		IEC 61850-3, IEEE 1613, EN 61000-6-2: 2005
EMC note		Class A product, see page 527

Ordering data

Description	Type	Order No.	Pcs./Pkt.
Managed Switch, 19-inch rack mounted - 24 RJ45 and 4 Gigabit combo ports	**FL SWITCH 4824E-4GC[1])**	2891072	1
Managed Switch, 19-inch rack mounted with 8 RJ45 and 4 Gigabit combo ports - 16 fiber optic (LC duplex) ports - 16 fiber optic (SC duplex) ports			
Managed Switch, 19-inch rack mounted with 4 Gigabit combo ports - 24 fiber optic (SC duplex) ports, multimode - 24 fiber optic (SC duplex) ports, single mode			

Accessories

Power supply, modular redundant			
- 48 V DC nominal	**FL SWITCH 4800E-P1**	2891075	1
- 230 V nominal	**FL SWITCH 4800E-P5**	2891076	1
Redundancy module			
- 3 RJ45 ports	**FL RED 2003E PRP**	2701863	1
- 1 RJ45 port, 2 LC fiber optic ports (multimode)	**FL RED 2001E PRP 2LC**	2701864	1

SFP module **See page 332**

IEC 61850-3

8 RJ45 ports,
4 Gigabit combo (SFP or RJ45) ports
and 16 FO ports (multimode)

Technical data

8 (RJ45 ports) 10/100 Mbps
Ethernet (RJ45/FO combo) Combo Auto negotiation and autocrossing (RJ45 interface)
16 (multimode) 100 Mbps (full duplex) LC 8 km (fiberglass with F-G 62.5/125 0.7 dB/km F1000)
Store and forward switch, Extended Ring and IEEE redundancy, Multicast control, IGMP snooping, trunking, Port and Tagging VLANs, Port and IEEE 802.1x security, SNMP V3 and Https security, SNTP, web customization, user accounts LEDs: U_{S1}, U_{S2} (redundant voltage supply), link and activity per port
Network, linear, and star structure: any 100 m
From FL SWITCH 4800E-P...
442 mm / 44 mm / 375 mm IP20 -40°C ... 70°C 5% ... 95% (non-condensing) EN 61000-6-4 IEC 61850-3, IEEE 1613, EN 61000-6-2: 2005 Class A product, see page 527

Ordering data

Type	Order No.	Pcs./Pkt.
FL SWITCH 4808E-16FX LC-4GC[1])	2891073	1
FL SWITCH 4808E-16FX-4GC[1])	2891079	1

Accessories

FL SWITCH 4800E-P1	2891075	1
FL SWITCH 4800E-P5	2891076	1
FL RED 2003E PRP	2701863	1
FL RED 2001E PRP 2LC	2701864	1

See page 332

IEC 61850-3

8 RJ45 ports,
4 Gigabit combo (SFP or RJ45) ports
and 16 FO ports (single mode)

Technical data

8 (RJ45 ports) 10/100 Mbps
Ethernet (RJ45/FO combo) Combo Auto negotiation and autocrossing (RJ45 interface)
16 (single mode) 100 Mbps (full duplex) LC 40 km (typical)
Store and forward switch, Extended Ring and IEEE redundancy, Multicast control, IGMP snooping, trunking, Port and Tagging VLANs, Port and IEEE 802.1x security, SNMP V3 and Https security, SNTP, web customization, user accounts LEDs: U_{S1}, U_{S2} (redundant voltage supply), link and activity per port
Network, linear, and star structure: any 100 m
From FL SWITCH 4800E-P...
442 mm / 44 mm / 375 mm IP20 -40°C ... 70°C 5% ... 95% (non-condensing) EN 61000-6-4 IEC 61850-3, IEEE 1613, EN 61000-6-2: 2005 Class A product, see page 527

Ordering data

Type	Order No.	Pcs./Pkt.
FL SWITCH 4808E-16FX SM LC-4GC[1])	2891074	1
FL SWITCH 4808E-16FX SM-4GC[1])	2891080	1

Accessories

FL SWITCH 4800E-P1	2891075	1
FL SWITCH 4800E-P5	2891076	1
FL RED 2003E PRP	2701863	1
FL RED 2001E PRP 2LC	2701864	1

See page 332

IEC 61850-3

4 Gigabit combo (SFP or RJ45) ports
and 24 FO ports

Technical data

	FL SWITCH 4800E-24FX-4GC	FL SWITCH 4800E-24FX SM-4GC
	8 (RJ45 ports) 10/100 Mbps	- -
	Ethernet (RJ45/FO combo) Combo Auto negotiation and autocrossing (RJ45 interface)	
	24 (multimode) 100 Mbps (full duplex) SC 8 km (fiberglass with F-G 62.5/125 0.7 dB/km F1000)	24 (single mode) 40 km (typical)
	Store and forward switch, Extended Ring and IEEE redundancy, Multicast control, IGMP snooping, trunking, Port and Tagging VLANs, Port and IEEE 802.1x security, SNMP V3 and Https security, SNTP, web customization, user accounts LEDs: U_{S1}, U_{S2} (redundant voltage supply), link and activity per port	
	Network, linear, and star structure: any 100 m	
	From FL SWITCH 4800E-P...	
	442 mm / 44 mm / 375 mm IP20 -40°C ... 70°C 5% ... 95% (non-condensing) EN 61000-6-4 IEC 61850-3, IEEE 1613, EN 61000-6-2: 2005 Class A product, see page 527	

Ordering data

Type	Order No.	Pcs./Pkt.
FL SWITCH 4800E-24FX-4GC	2891102	1
FL SWITCH 4800E-24FX SM-4GC	2891104	1

Accessories

FL SWITCH 4800E-P1	2891075	1
FL SWITCH 4800E-P5	2891076	1
FL RED 2003E PRP	2701863	1
FL RED 2001E PRP 2LC	2701864	1

See page 332

SMCS series Managed Switches

Smart Managed Switches offer excellent real-time properties with high data throughput at the same time.

The industrial DIN rail switches support Fast Ethernet or Gigabit on all ports and are ideal for use in the PROFINET RT or EtherNet/IP™ environment.

The **FL SWITCH SMCS 8GT** and **6GT/2SFP** Gigabit versions also have maritime approvals GL, BV, ABS, LR, and DNV.

All eight-port versions of the SMCS switches can be used in Ex zone 2.

All devices support:
- RSTP
- MRP (client and master)
- VLANs
- SNMP

8 RJ45 ports

Ex:

Technical data

	FL SWITCH SMCS 8TX	FL SWITCH SMCS 8GT
Ethernet interface		
Number of ports	8 (RJ45 ports)	
Transmission speed	10/100 Mbps	10/100/1000 Mbps
Fiber optic interface		
Number of ports	-	
Transmission speed	-	
Wavelength	-	
Transmission distance	-	
	-	
Other connections		
Serial (RS-232)	RS-232-C, 6-pos. MINI-DIN socket (PS/2)	
Function		
Basic functions	Store-and-forward switch complies with IEEE 802.3, 4 priority classes in acc. with IEEE 802.1 P TCP/IP protocol, BootP-capable, port-mirroring, integrated web server function, multicast filtering, IGMP snooping, VLAN, Rapid Spanning Tree (RSTP), PROFINET Device, Media Redundancy Protocol (MRP).	
Status and diagnostic indicators	LEDs: US1, US2 (power supply), Fail (alarm contact), 2 LEDs per Ethernet port (Link and switchable Activity/Speed/Duplex)	
Power supply		
Supply voltage	24 V DC (redundant)	
Residual ripple	3.6 V_{PP}	
Supply voltage range	18 V DC ... 32 V DC	
Typical current consumption	240 mA (at U_S = 24 V DC)	450 mA (at U_S = 24 V DC)
General data		
Dimensions W / H / D	128 mm / 110 mm / 69 mm	
Degree of protection	IP20	
Ambient temperature (operation)	0°C ... 55°C (non-condensing)	
Permissible humidity (operation)	5% ... 95% (non-condensing)	
Noise emission	EN 61000-6-3 +A11	
Noise immunity	EN 61000-6-2:2005	

Ordering data

Description	Type	Order No.	Pcs./Pkt.
Smart Managed Compact Switch			
- 8 RJ45 ports	**FL SWITCH SMCS 8TX**	2989226	1
- 8 RJ45 ports, preconfigured for PROFINET	**FL SWITCH SMCS 8TX-PN**	2989103	1
- 8 RJ45 ports, 1000 Mbps	**FL SWITCH SMCS 8GT**	2891123	1
- 6 RJ45 ports, 2 SFP FO ports			
- 6 RJ45 ports, 2 SFP FO ports, 1000 Mbps			
- 16 RJ45 ports			
- 14 RJ45 ports, 2 SC FO ports (multimode)			
- 14 RJ45 ports, 2 SC FO ports (single mode)			

Accessories

Configuration memory, replaceable	**FL MEM PLUG**	2891259	1
Configuration memory, replaceable, with MRM function	**FL MEM PLUG/MRM**	2891275	1

SFP module

6 RJ45 ports and 2 SFP ports

Ex:

Technical data

	FL SWITCH SMCS 6TX/2SFP	FL SWITCH SMCS 6GT/2SFP
	6 (RJ45 ports)	
	10/100 Mbps	10/100/1000 Mbps
	2 (SFP ports)	
	1000 Mbps (full duplex)	
	-	
	up to 80 km (depending on the fiber/SFP module used)	
	-	
	RS-232-C, 6-pos. MINI-DIN socket (PS/2)	
	Store-and-forward switch complies with IEEE 802.3, 4 priority classes in acc. with IEEE 802.1 P TCP/IP protocol, BootP-capable, port-mirroring, integrated web server function, multicast filtering, IGMP snooping, VLAN, Rapid Spanning Tree (RSTP), PROFINET Device, Media Redundancy Protocol (MRP). LEDs: US1, US2 (power supply), Fail (alarm contact), 2 LEDs per Ethernet port (Link and switchable Activity/Speed/Duplex)	
	24 V DC (redundant)	
	3.6 V_{PP}	
	18 V DC ... 32 V DC	
	600 mA (at U_S = 24 V DC)	
	128 mm / 110 mm / 69 mm	
	IP20	
	0°C ... 55°C (non-condensing)	
	5% ... 95% (non-condensing)	
	EN 61000-6-3 +A11	
	EN 61000-6-2:2005	

Ordering data

Type	Order No.	Pcs./Pkt.
FL SWITCH SMCS 6TX/2SFP	2989323	1
FL SWITCH SMCS 6GT/2SFP	2891479	1

Accessories

FL MEM PLUG	2891259	1
FL MEM PLUG/MRM	2891275	1

See page 332

16 RJ45 ports

Technical data

	16 (RJ45 ports)
	10/100 Mbps
	-
	-
	-
	-
	-
	RS-232-C, 6-pos. MINI-DIN socket (PS/2)
	Store-and-forward switch complies with IEEE 802.3, 4 priority classes in acc. with IEEE 802.1 P TCP/IP protocol, BootP-capable, port-mirroring, integrated web server function, multicast filtering, IGMP snooping, VLAN, Rapid Spanning Tree (RSTP), PROFINET Device, Media Redundancy Protocol (MRP). LEDs: US1, US2 (power supply), Fail (alarm contact), 2 LEDs per Ethernet port (Link and switchable Activity/Speed/Duplex)
	24 V DC (redundant)
	3.6 V_{PP}
	18 V DC ... 32 V DC
	200 mA (at U_S = 24 V DC)
	214 mm / 110 mm / 69 mm
	IP20
	-40°C ... 70°C (non-condensing)
	5% ... 95% (non-condensing)
	EN 61000-6-3
	EN 61000-6-2:2005

Ordering data

Type	Order No.	Pcs./Pkt.
FL SWITCH SMCS 16TX	2700996	1

Accessories

FL MEM PLUG	2891259	1
FL MEM PLUG/MRM	2891275	1

14 RJ45 ports and 2 FO ports

Technical data

	FL SWITCH SMCS 14TX/2FX	FL SWITCH SMCS 14TX/2FX-SM
	14 (RJ45 ports)	
	10/100 Mbps	
	2 (SC multimode)	2 (SC single mode)
	100 Mbps (full duplex)	
	1310 nm	
	10000 m (depending on the fiber used)	36000 m (fiberglass with F-G 9/125 0.36 dB/km)
	6400 m (fiberglass with F-G 50/125 0.7 dB/km F1200)	32000 m (fiberglass with F-G 9/125 0.4 dB/km)
	RS-232-C, 6-pos. MINI-DIN socket (PS/2)	
	Store-and-forward switch complies with IEEE 802.3, 4 priority classes in acc. with IEEE 802.1 P TCP/IP protocol, BootP-capable, port-mirroring, integrated web server function, multicast filtering, IGMP snooping, VLAN, Rapid Spanning Tree (RSTP), PROFINET Device, Media Redundancy Protocol (MRP). LEDs: US1, US2 (power supply), Fail (alarm contact), 2 LEDs per Ethernet port (Link and switchable Activity/Speed/Duplex)	
	24 V DC (redundant)	
	3.6 V_{PP}	
	18 V DC ... 32 V DC	
	290 mA (at U_S = 24 V DC)	
	214 mm / 110 mm / 69 mm	
	IP20	
	-40°C ... 70°C (non-condensing)	
	5% ... 95% (non-condensing)	
	EN 61000-6-3	
	EN 61000-6-2:2005	

Ordering data

Type	Order No.	Pcs./Pkt.
FL SWITCH SMCS 14TX/2FX	2700997	1
FL SWITCH SMCS 14TX/2FX-SM	2701466	1

Accessories

FL MEM PLUG	2891259	1
FL MEM PLUG/MRM	2891275	1

Switches for PROFINET IRT

The IRT switches are particularly suitable for high-performance PROFINET networks.

The **FL SWITCH IRT** switches use built-in ERTEC (Enhanced Real Time Ethernet Controller) technology to forward PROFINET data packets as fast as possible using the cut-through method.

In addition, PROFINET data packets are always delivered with the highest priority to the receiver independently of other data traffic.

The **FL SWITCH IRT** switches can be fully configured and monitored via STEP7 and PC Worx.

4 RJ45 ports

Features:

- Easy integration into a PROFINET network
- Extended temperature range (-25°C ... +60°C)
- POF interfaces for use in areas subject to high levels of EMI
- Path length measurement
- Fiber optic diagnostics
- MRP client

Technical data

Ethernet interface		
Number of ports		4 (RJ45 ports)
Transmission speed		10/100 Mbps
Fiber optic interface		
Number of ports		-
Transmission speed		-
Wavelength		-
Transmission distance		-
Function		
Basic functions		Cut-through/store-and-forward switch complies with IEEE 802.3, 2 priority classes in accordance with IEEE802.1 P, TCP/IP protocol, DCP capable, integrated web server function, PROFINET device.
Status and diagnostic indicators		LEDs: US1, US2 (power supply), Fail (alarm contact), 3 LEDs per Ethernet port (Link, Activity, and FO status), and BF (Bus Fail)
Power supply		
Supply voltage		24 V DC (redundant)
Residual ripple		3.6 V_{PP}
Supply voltage range		18.5 V DC ... 30.2 V DC
Typical current consumption		165 mA (at U_S = 24 V DC)
General data		
Dimensions	W / H / D	127 mm / 95 mm / 69 mm
Degree of protection		IP20
Ambient temperature (operation)		-25°C ... 60°C
Permissible humidity (operation)		5% ... 95% (non-condensing)
EMC note		Class A product, see page 527

Ordering data

Description	Type	Order No.	Pcs./Pkt.
Ethernet switch for PROFINET applications - 4 RJ45 ports - 2 RJ45 ports, 2 POF SC-RJ ports - 1 RJ45 port, 3 POF SC-RJ ports	**FL SWITCH IRT 4TX**	2700689	1

Accessories

Configuration memory, replaceable	**FL MEM PLUG**	2891259	1
Configuration memory, replaceable, with MRM function	**FL MEM PLUG/MRM**	2891275	1

2 RJ45 ports and 2 POF SC-RJ ports

Technical data

2 (RJ45 ports) 10/100 Mbps
2 (SC-RJ) 100 Mbps (full duplex) 650 nm up to 100 m (depending on the fiber used)
Cut-through/store-and-forward switch complies with IEEE 802.3, 2 priority classes in accordance with IEEE802.1 P, TCP/IP protocol, DCP capable, integrated web server function, PROFINET device. LEDs: US1, US2 (power supply), Fail (alarm contact), 3 LEDs per Ethernet port (Link, Activity, and FO status), and BF (Bus Fail)
24 V DC (redundant) 3.6 V_{PP} 18.5 V DC ... 30.2 V DC 235 mA (at U_S = 24 V DC)
127 mm / 95 mm / 69 mm IP20 -25°C ... 60°C 5% ... 95% (non-condensing) Class A product, see page 527

Ordering data

Type	Order No.	Pcs./Pkt.
FL SWITCH IRT 2TX 2POF	2700691	1

Accessories

FL MEM PLUG	2891259	1
FL MEM PLUG/MRM	2891275	1

1 RJ45 port and 3 POF SC-RJ ports

Technical data

1 (RJ45 port) 10/100 Mbps
3 (SC-RJ) 100 Mbps (full duplex) 650 nm up to 100 m (depending on the fiber used)
Cut-through/store-and-forward switch complies with IEEE 802.3, 2 priority classes in accordance with IEEE802.1 P, TCP/IP protocol, DCP capable, integrated web server function, PROFINET device. LEDs: US1, US2 (power supply), Fail (alarm contact), 3 LEDs per Ethernet port (Link, Activity, and FO status), and BF (Bus Fail)
24 V DC (redundant) 3.6 V_{PP} 18.5 V DC ... 30.2 V DC 270 mA (at U_S = 24 V DC)
127 mm / 95 mm / 69 mm IP20 -25°C ... 60°C 5% ... 95% (non-condensing) Class A product, see page 527

Ordering data

Type	Order No.	Pcs./Pkt.
FL SWITCH IRT TX 3POF	2700692	1

Accessories

FL MEM PLUG	2891259	1
FL MEM PLUG/MRM	2891275	1

1 RJ45 port and 3 POF SC-RJ ports, for wall mounting

Technical data

1 (RJ45 port) 10/100 Mbps
3 (SC-RJ) 100 Mbps (full duplex) 650 nm up to 100 m (depending on the fiber used)
Cut-through/store-and-forward switch complies with IEEE 802.3, 2 priority classes in accordance with IEEE802.1 P, TCP/IP protocol, DCP capable, integrated web server function, PROFINET device. LEDs: US1, US2 (power supply), Fail (alarm contact), 3 LEDs per Ethernet port (Link, Activity, and FO status), and BF (Bus Fail)
24 V DC (redundant) 3.6 V_{PP} 18.5 V DC ... 30.2 V DC 260 mA (at U_S = 24 V DC)
176 mm / 112 mm / 99 mm IP67 -25°C ... 60°C 5% ... 95% (non-condensing) Class A product, see page 527

Ordering data

Type	Order No.	Pcs./Pkt.
FL SWITCH IRT IP TX/3POF	2700697	1

Accessories

FL MEM PLUG	2891259	1
FL MEM PLUG/MRM	2891275	1

7000 series Managed Switches

The automation switches in the 7000 series are switches that support direct integration into a Device Level Ring (DLR). Direct integration of the switches into the DLR is a considerable advantage when installing and operating EtherNet/IP™ networks.

Up to six devices can be integrated into a DLR via the **FL SWITCH 7000**. In system networks, the switches allow the redundant rings to be connected to the higher-level networking level. In this way, you can create networks with minimal switch-over times of less than three milliseconds (< 3 ms).

The Managed Switches from the 7000 series communicate directly via the Common Industrial Protocol (CIP) in the EtherNet/IP™ network. Via CIP, you can integrate the switch into an EtherNet/IP™ control system from where it can be configured and diagnosed.

Pure copper versions and versions with up to four fiberglass ports are available for flexible use. The range also includes versions for Gigabit transmission and combo ports for free selection of the transmission medium (RJ45 or SFP).

Features:

- Slim design
- Extended temperature range (-40°C ... +70°C)
- VLANs
- Common Industrial Protocol (CIP)
- Device Level Ring (DLR)
- RSTP
- Web-based management
- Port-based/pool-based DHCP server, DHCP option 82
- HTTPS/SNMPv3

EtherNet/IP

8 RJ45 ports

Ex:

Technical data

Ethernet interface		
Number of ports		8 (RJ45 ports)
Transmission speed		10/100 Mbps
Fiber optic interface		
Number of ports		-
Transmission speed		-
Wavelength		-
Transmission distance		-
Fiber optic interface		
Number of ports		-
Transmission speed		-
Wavelength		-
Transmission distance		-
Function		
Basic functions		Store-and-forward switch, complies with IEEE 802.3
Management		Web-based management (HTTP/HTTPS) SNMPv1/v2/v3
Diagnostic function		Remanente Event-Table RMON History N:1-Portmirroring LLDP (Link Layer Discovery Protocol) SNMP-Traps ACD (Address Conflict Detection)
Redundancy		DLR (Device Level Ring) RSTP (Rapid Spanning Tree Protocol) FRD (Fast Ring Detection) Large Tree Support
Additional function		MAC-based Port Security
Status and diagnostic indicators		LEDs: US1, US2 (power supply), Fail (alarm contact), 2 LEDs per Ethernet port (Link and switchable Activity/Speed/Duplex) EtherNet/IP™ status LED: Net, Mod
Power supply		
Supply voltage		24 V DC (redundant)
Residual ripple		3.6 V_{PP}
Supply voltage range		12 V DC ... 58 V DC
Typical current consumption		350 mA (at U_S = 24 V DC)
General data		
Dimensions	W / H / D	60 mm / 130 mm / 135.5 mm
Degree of protection		IP20
Ambient temperature (operation)		-40°C ... 70°C
Permissible humidity (operation)		10% ... 95% (non-condensing)
Noise emission		EN 61000-6-4
Noise immunity		EN 61000-6-2:2005
EMC note		Class A product, see page 527

Ordering data

Description	Type	Order No.	Pcs./Pkt.
Ethernet switch			
	FL SWITCH 7008-EIP	**2701418**	1

Accessories

SFP module

EtherNet/IP

6 / 5 RJ45 ports and
2 / 3 fiber optic ports

Ex:

Technical data

FL SWITCH 7006/2FX-EIP	FL SWITCH 7005/FX-2FXSM-EIP
6 (RJ45 ports)	5 (RJ45 ports)
10/100 Mbps	
2 (SC multimode)	1 (SC multimode)
100 Mbps (full duplex)	
1300 nm	
11000 m (fiberglass with F-G 62.5/125 0.7 dB/km F1000)	
-	2 (SC single mode)
-	100 Mbps (full duplex)
-	1300 nm
-	36000 m (fiberglass with F-G 9/125 0.36 dB/km)
Store-and-forward switch, complies with IEEE 802.3	
Web-based management (HTTP/HTTPS) SNMPv1/v2/v3 Remanente Event-Table RMON History N:1-Portmirroring LLDP (Link Layer Discovery Protocol) SNMP-Traps ACD (Address Conflict Detection) DLR (Device Level Ring) RSTP (Rapid Spanning Tree Protocol) FRD (Fast Ring Detection) Large Tree Support MAC-based Port Security LEDs: US1, US2 (power supply), Fail (alarm contact), 2 LEDs per Ethernet port (Link and switchable Activity/Speed/Duplex) EtherNet/IP™ status LED: Net, Mod	
24 V DC (redundant) 3.6 V_{PP} 12 V DC ... 58 V DC	
470 mA (at U_S = 24 V DC)	520 mA (at U_S = 24 V DC)
60 mm / 130 mm / 135.5 mm IP20 -40°C ... 70°C 10% ... 95% (non-condensing) EN 61000-6-4 EN 61000-6-2:2005 Class A product, see page 527	

Ordering data

Type	Order No.	Pcs./Pkt.
FL SWITCH 7006/2FX-EIP	2701419	1
FL SWITCH 7005/FX-2FXSM-EIP	2701420	1

Accessories

EtherNet/IP

6 / 4 RJ45 ports and
2 / 4 Gigabit combo ports (SFP or RJ45)

Technical data

FL SWITCH 7006-2GC-EIP	FL SWITCH 7004-4GC-EIP
6 (RJ45 ports)	4 (RJ45 ports)
10/100 Mbps	
2 (Combo ports)	4 (Combo ports)
10/100/1000 Mbps (full duplex)	
-	
up to 80 km (depending on the fiber/SFP module used)	
-	
-	
-	
-	
Store-and-forward switch, complies with IEEE 802.3	
Web-based management (HTTP/HTTPS) SNMPv1/v2/v3 Remanente Event-Table RMON History N:1-Portmirroring LLDP (Link Layer Discovery Protocol) SNMP-Traps ACD (Address Conflict Detection) DLR (Device Level Ring) RSTP (Rapid Spanning Tree Protocol) FRD (Fast Ring Detection) Large Tree Support MAC-based Port Security LEDs: US1, US2 (power supply), Fail (alarm contact), 2 LEDs per Ethernet port (Link and switchable Activity/Speed/Duplex) EtherNet/IP™ status LED: Net, Mod	
24 V DC (redundant) 3.6 V_{PP} 12 V DC ... 58 V DC	
520 mA (at U_S = 24 V DC)	535 mA (at U_S = 24 V DC)
60 mm / 130 mm / 135.5 mm IP20 -40°C ... 70°C 10% ... 95% (non-condensing) EN 61000-6-4 EN 61000-6-2:2005 Class A product, see page 527	

Ordering data

Type	Order No.	Pcs./Pkt.
FL SWITCH 7006-2GC-EIP	2701554	1
FL SWITCH 7004-4GC-EIP	2701553	1

Accessories

See page 332

EtherNet/IP

4 RJ45 ports, 2 Fast Ethernet and
2 Gigabit combo ports (SFP or RJ45)

Technical data

4 (RJ45 ports)
10/100 Mbps
2 (Combo ports)
10/100/1000 Mbps (full duplex)
-
up to 80 km (depending on the fiber/SFP module used)
2 (Combo ports)
10/100 Mbps (full duplex)
-
up to 40 km (depending on the fiber/SFP module used)
Store-and-forward switch, complies with IEEE 802.3
Web-based management (HTTP/HTTPS) SNMPv1/v2/v3 Remanente Event-Table RMON History N:1-Portmirroring LLDP (Link Layer Discovery Protocol) SNMP-Traps ACD (Address Conflict Detection) DLR (Device Level Ring) RSTP (Rapid Spanning Tree Protocol) FRD (Fast Ring Detection) Large Tree Support MAC-based Port Security LEDs: US1, US2 (power supply), Fail (alarm contact), 2 LEDs per Ethernet port (Link and switchable Activity/Speed/Duplex) EtherNet/IP™ status LED: Net, Mod
24 V DC (redundant) 3.6 V_{PP} 12 V DC ... 58 V DC
560 mA (at U_S = 24 V DC)
60 mm / 130 mm / 135.5 mm IP20 -40°C ... 70°C 10% ... 95% (non-condensing) EN 61000-6-4 EN 61000-6-2:2005 Class A product, see page 527

Ordering data

Type	Order No.	Pcs./Pkt.
FL SWITCH 7004-2TC-2GC-EIP	2702175	1

Accessories

See page 332

2000 series NAT switches

Thanks to its high flexibility, the 2000 series NAT switch provides a solution for every NAT application. Individual ports can be mapped to up to eight different LAN or WAN interfaces in total. This enables a wide range of different solutions for individual applications. Redundant connections to higher-level networks, such as ring topologies on the LAN side, can also be implemented easily.

new

8 RJ45 ports

new

4 / 8 RJ45 ports, optional 2 SFP ports and 2 Gigabit combo ports

Ex:

		Technical data	Technical data	
			FL NAT 2208	FL NAT 2304-2GC-2SFP
Ethernet interface				
Number of ports		8 (RJ45 ports)	8 (RJ45 ports)	4 (RJ45 ports)
Transmission speed		10/100 Mbps	10/100 Mbps	10/100/1000 Mbps
Fiber optic interface				
Number of ports		-	-	2 (SFP ports)
Transmission speed		-	-	100/1000 Mbps (full duplex)
Transmission distance		-	-	up to 80 km (depending on the fiber/SFP module used)
Function				
Basic functions		Router for standard routing, NAT, 1:1-NAT and port forwarding	Store-and-forward switch, complies with IEEE 802.3	
Management		Web-based management (HTTP/HTTPS) SNMPv1/v2/v3 Command-line interface (Telnet, SSH)	Web-based management (HTTP/HTTPS) SNMPv1/v2/v3 Command-line interface (Telnet, SSH)	
Diagnostic function		RMON History LLDP (Link Layer Discovery Protocol) SNMP-Traps N:1-Portmirroring ACD (Address Conflict Detection)	RMON History LLDP (Link Layer Discovery Protocol) SNMP-Traps N:1-Portmirroring ACD (Address Conflict Detection)	
Redundancy		MRP (Media Redundancy Protocol) RSTP (Rapid Spanning Tree Protocol)	MRP (Media Redundancy Protocol) RSTP (Rapid Spanning Tree Protocol) FRD (Fast Ring Detection) Large Tree Support	
NAT functions		1:1-NAT Virtual-NAT IP-Masquerading Port forwarding	1:1-NAT Virtual-NAT IP-Masquerading Port forwarding	
Status and diagnostic indicators		LEDs: US (power supply), 2 LEDs per Ethernet port (Link/Activity and Speed)	LEDs: US1, US2 (power supply), Fail (alarm contact), 2 LEDs per Ethernet port (Link/Activity and Speed)	
Power supply				
Supply voltage		24 V DC (single)	24 V DC (redundant)	
Residual ripple		3.6 V_{PP}	3.6 V_{PP}	
Supply voltage range		18 V DC ... 32 V DC	9 V DC ... 57 V DC	12 V DC ... 57 V DC
Typical current consumption		180 mA (at U_S = 24 V DC)	185 mA (at U_S = 24 V DC)	290 mA (at U_S = 24 V DC)
General data				
Dimensions	W / H / D	45 mm / 130 mm / 115 mm	45 mm / 130 mm / 115 mm	
Degree of protection		IP20	IP20	
Ambient temperature (operation)		0°C ... 60°C	-40°C ... 70°C	
Permissible humidity (operation)		10% ... 95% (non-condensing)	10% ... 95% (non-condensing)	
Noise emission		EN 61000-6-4	EN 61000-6-4	
Noise immunity		EN 61000-6-2	EN 61000-6-2	
EMC note		Class A product, see page 527	Class A product, see page 527	

	Ordering data			Ordering data		
Description	Type	Order No.	Pcs./Pkt.	Type	Order No.	Pcs./Pkt.
NAT switch						
- 8 RJ45 ports	**FL NAT 2008**	2702881	1	**FL NAT 2208**	2702882	1
- 4 RJ45 ports, 2 Gigabit combo ports (SFP or RJ45), and 2 SFP ports				**FL NAT 2304-2GC-2SFP**	2702981	1

	Accessories	Accessories
SFP module		**See page 332**

Layer 3 switches

Gigabit Modular Switches

The high-performance switch can communicate on up to 28 ports via any transmission medium.

Features:

- Up to 12 integrated Gigabit ports
- Quick and easy local configuration options with the operator/display interface
- Optional Layer 3 functions can be activated
- Static and dynamic routing
- Port- and VLAN-based routing

Head station, 8 - 16 ports

Head station, 12 - 20 ports

	Technical data	Technical data
SFP interface		
Number of ports	4 (SFP ports or RJ45 ports)	4 (SFP ports)
Transmission speed	1000 Mbps (full duplex)	1000 Mbps (full duplex)
Copper interface		
Number of ports	4 (RJ45 ports)	8 (RJ45 ports)
Transmission speed	10/100 Mbps	10/100/1000 Mbps
Interface extension		
Number of ports	2 (per interface module)	2 (per interface module)
Note on the connection method	Max. 4 interface modules (without extension)	Max. 4 interface modules (without extension)
Transmission speed	10/100 Mbps (full duplex)	10/100 Mbps (full duplex)
Transmission physics	Multimode fiberglass Single mode fiberglass POF-SCRJ GI-HCS fibers Copper PoE	Multimode fiberglass Single mode fiberglass POF-SCRJ GI-HCS fibers Copper PoE
Function		
Basic functions	Store-and-forward switch complies with IEEE 802.3, 8 priority classes in accordance with IEEE 802.1p, smart mode, port mirroring, multicast filtering, IGMP snooping, VLANs, Media Redundancy Protocol (MRP in accordance with IEC 62439), Rapid Spanning Tree (RSTP), Fast Ring Detection (FRD), Large Tree Support, IEEE 802.1X security, port security, SNMPv3, HTTPS, PROFINET device, GMRP, GVRP, SNTP, 2 digital inputs	Store-and-forward switch complies with IEEE 802.3, 8 priority classes in accordance with IEEE 802.1p, smart mode, port mirroring, multicast filtering, IGMP snooping, VLANs, Media Redundancy Protocol (MRP in accordance with IEC 62439), Rapid Spanning Tree (RSTP), Fast Ring Detection (FRD), Large Tree Support, IEEE 802.1X security, port security, SNMPv3, HTTPS, PROFINET device, GMRP, GVRP, SNTP, 2 digital inputs
Power supply		
Supply voltage	24 V DC (redundant)	24 V DC (redundant)
Supply voltage range	18.5 V DC ... 30.2 V DC	18.5 V DC ... 30.2 V DC
Typical current consumption	800 mA (up to 2.5 A, depends on the configuration)	800 mA (up to 2.7 A, depends on the configuration)
General data		
Dimensions W / H / D	287 mm / 122 mm / 113 mm	287 mm / 122 mm / 113 mm
Degree of protection	IP20	IP20
Ambient temperature (operation)	-20°C ... 55°C (non-condensing)	-20°C ... 55°C (non-condensing)
Noise emission	EN 61000-6-3/-4	EN 61000-6-3/-4
Noise immunity	EN 61000-6-2:2005	EN 61000-6-2:2005

Ordering data				Ordering data		
Description	Type	Order No.	Pcs./Pkt.	Type	Order No.	Pcs./Pkt.
Gigabit Modular Switch						
- 4 Gigabit ports and 12 Fast Ethernet ports	**FL SWITCH GHS 4G/12**	2700271	1			
	FL SWITCH GHS 4G/12-L3	2700786	1			
- 12 Gigabit ports and 8 Fast Ethernet ports				**FL SWITCH GHS 12G/8**	2989200	1
				FL SWITCH GHS 12G/8-L3	2700787	1

Accessories				Accessories		
Extension						
- 8 Ethernet ports	**FL FXT**	2989307	1	**FL FXT**	2989307	1
Program and configuration memory, plug-in	**SD FLASH 512MB**	2988146	1	**SD FLASH 512MB**	2988146	1
Parameterization memory, replaceable, with MRM function	**FL SD FLASH/MRM**	2700270	1	**FL SD FLASH/MRM**	2700270	1
Parameterization memory, replaceable with MRM and Layer 3 function	**FL SD FLASH/L3/MRM**	2700607	1	**FL SD FLASH/L3/MRM**	2700607	1
SFP module	**See page 332**			**See page 332**		

Interface modules

Highly modular 2-port interface modules enable a flexible cable outlet direction: either downward or to the front, depending on the requirements of the installation and location. There are interface modules for twisted pairs, fiberglass or cost-effective Ethernet installation with polymer and PCF fibers, all designed to carry out the particular job at hand.

TX ports

Fiber optic ports (multimode)

Ex:

Ex:

	Technical data		Technical data	
	FL IF 2TX VS-RJ-F	FL IF 2PSE-F	FL IF 2FX SC-F	FL IF 2FX ST-D
Ethernet interface				
Number of ports	2 (RJ45 ports)	2 (PoE ports)	-	
Transmission speed	10/100 Mbps (connection direction to the front)		-	
Fiber optic interface				
Number of ports	-		2 (SC multimode)	2 (ST multimode)
Transmission speed	-		100 Mbps	
Wavelength	-		1300 nm	
Transmission distance	-		2800 m (fiberglass with F-G 50/125 1.6 dB/km F800)	10000 m (fiberglass with F-G 62.5/125 0.7 dB/km F1000)
	-		6400 m (fiberglass with F-G 50/125 0.7 dB/km F1200)	
	-		3000 m (fiberglass with F-G 62.5/125 2.6 dB/km F600)	
	-		2800 m (fiberglass with F-G 50/125 1.6 dB/km F800)	
Function				
Basic functions	Media module for Modular Managed Switch	Media module for Modular Managed Switch with Power over Ethernet IEEE802.3af, Power Source Equipment (PSE)	Media module for Modular Managed Switch	
Power supply				
Power supply connection	From FL SWITCH GHS or FXT		From FL SWITCH GHS or FXT	
Supply voltage	via head station	Internal / 48 V DC for PoE	via head station	
Typical current consumption	10 mA	10 mA (max. 900 mA)	200 mA	
General data				
Dimensions W / H / D	31 mm / 75.7 mm / 75.5 mm	31 mm / 84.7 mm / 75.5 mm	31 mm / 75.7 mm / 72.5 mm	31 mm / 83 mm / 72.5 mm
Degree of protection	IP20		IP20	
Ambient temperature (operation)	-20°C ... 55°C (non-condensing)		0°C ... 55°C (non-condensing)	
Permissible humidity (operation)	10% ... 95% (non-condensing)		10% ... 95% (non-condensing)	
Noise emission	EN 61000-6-3/-4		EN 61000-6-3/-4	
Noise immunity	EN 61000-6-2:2005		EN 61000-6-2:2005	
EMC note	Class A product, see page 527		Class A product, see page 527	

	Ordering data			Ordering data		
Description	Type	Order No.	Pcs./Pkt.	Type	Order No.	Pcs./Pkt.
Interface module, for Modular Managed Switch system						
- Outlet at the front	**FL IF 2TX VS-RJ-F**	2832344	1			
- Outlet at the bottom	**FL IF 2TX VS-RJ-D**	2832357	1			
- Power over Ethernet, outlet at the front	**FL IF 2PSE-F**	2832904	1			
Interface module, for connecting 100Base-FX fiberglass (1300 nm)						
- Outlet at the front, SC multimode				**FL IF 2FX SC-F**	2832412	1
- Outlet at the bottom, SC multimode				**FL IF 2FX SC-D**	2832425	1
- Outlet at the bottom, ST multimode				**FL IF 2FX ST-D**	2884033	1
- Outlet at the bottom, SC single mode						
Interface modules, 2 ports, SC-RJ for POF/PCF, diagnostics-capable						
Configuration memory, replaceable						
- MRM function						

Fiber optic ports (single mode)

POF SC-RJ ports

Configuration memory and MRP manager function

Ex:

Technical data	Technical data	Technical data	
		FL MEM PLUG	FL MEM PLUG/MRM
2	-	-	
100 Mbps	-	-	
2	2 (SC-RJ)	-	
100 Mbps	100 Mbps	-	
1300 nm	-	-	
36000 m (fiberglass with F-G 9/125 0.36 dB/km)	50 m (including 3 dB system reserve, polymer fiber with F-K 980/1000 230 dB/km)	-	
32000 m (fiberglass with F-G 9/125 0.4 dB/km)	100 m (PCF fiber with F-S 200/230 10 dB/km)	-	
26000 m (fiberglass with F-G 9/125 0.5 dB/km)	-	-	
-	-	-	
Media module for Modular Managed Switch	Media module for Modular Managed Switch with FO diagnostics	Configuration memory (plug-in)	Configuration memory and manager for the media redundancy protocol (MRP)
From FL SWITCH GHS or FXT	From FL SWITCH GHS or FXT	from FL SWITCH MCS/SMCS	
via head station	48 V DC (via head station)	-	
200 mA	200 mA	-	
31 mm / 85 mm / 72.5 mm	31 mm / 73.5 mm / 72.5 mm	16 mm / 49 mm / -	
IP20	IP20	IP20	
0°C ... 55°C (non-condensing)	0°C ... 55°C (non-condensing)	0°C ... 55°C (non-condensing)	
10% ... 95% (non-condensing)	10% ... 95% (non-condensing)	10% ... 95% (non-condensing)	
EN 61000-6-3/-4	EN 61000-6-3/-4	EN 61000-6-3/-4	
EN 61000-6-2:2005	EN 61000-6-2:2005	EN 61000-6-2:2005	
Class A product, see page 527	Class A product, see page 527		

Ordering data

Type	Order No.	Pcs./Pkt.
FL IF 2FX SM SC-D	2832205	1

Ordering data

Type	Order No.	Pcs./Pkt.
FL IF 2POF SCRJ-D	2891084	1

Ordering data

Type	Order No.	Pcs./Pkt.
FL MEM PLUG	2891259	1
FL MEM PLUG/MRM	2891275	1

SFP modules

The **FL SFP** modules are characterized by their high degree of flexibility when used in switches.

IEC 61850-3

Fiberglass, for transmission ranges up to 40 km

Fiberglass, for Gigabit transmission ranges up to 2 km

	Technical data		Technical data	
	FL SFP FX	FL SFP FX SM	FL SFP SX	FL SFP SX2
Ethernet interface				
Number of ports	-		-	
Transmission speed	-		-	
Fiber optic interface				
Number of ports	1 (LC multimode)	1 (LC single mode)	1 (LC multimode)	
Transmission speed	100 Mbps		1 Gbps	
Wavelength	1310 nm		850 nm	1310 nm
Transmission distance	typ. 2 km	typ. 40 km	275 m (Fiberglass, 62.5/125 µm (OM1))	2 km (Fiberglass 50/125)
	-		550 m (Fiberglass, 50/125 µm (OM2))	1 km (Fiberglass 62.5/125)
	-		1000 m (Fiberglass, 50/125 µm (OM3))	-
	-		1000 m (Fiberglass, 50/125 µm (OM4))	-
Function				
Basic functions	SFP module as FO port		SFP module as FO port	
Power supply				
Power supply connection	via SFP slot		via SFP slot	
Supply voltage	3.3 V (via Factoryline switch)		3.3 V (via Factoryline switch)	
General data				
Ambient temperature (operation)	-40°C ... 85°C (non-condensing)		-40°C ... 75°C (non-condensing)	-40°C ... 75°C
Permissible humidity (operation)	30% ... 95% (non-condensing)		30% ... 95% (non-condensing)	-

	Ordering data			Ordering data		
Description	Type	Order No.	Pcs./Pkt.	Type	Order No.	Pcs./Pkt.
Small form-factor pluggable (SFP) fiberglass module, 100 Mbps						
- Wavelength 1310 nm, multimode (2 km)	**FL SFP FX**	2891081	1			
- Wavelength 1300 nm, single mode (40 km)	**FL SFP FX SM**	2891082	1			
Small form-factor pluggable (SFP) fiberglass module, 1000 Mbps						
- Wavelength 850 nm, multimode (1 km)				**FL SFP SX**	2891754	1
- Wavelength 1310 nm, multimode (2 km)				**FL SFP SX2**	2702397	1
- Wavelength 1310 nm, single mode (10 km)						
- Wavelength 1310 nm, single mode (30 km)						
- Wavelength 1550 nm, single mode (80 km)						
WDM20 SFP fiberglass module, 100 Mbps						
- Set consisting of WDM20-A and WDM20-B modules						
- A module: wavelength 1310/1550 nm, single mode (20 km)						
- B module: wavelength 1550/1310 nm, single mode (20 km)						
WDM10 SFP fiberglass module, 1000 Mbps						
- Set consisting of WDM10-A and WDM10-B modules						
- A module: wavelength 1310/1550 nm, single mode (10 km)						
- B module: wavelength 1550/1310 nm, single mode (10 km)						
Small form-factor pluggable (SFP) copper module, 1000 Mbps						
- SFP module with RJ45 connection						

Fiberglass,
for Gigabit transmission ranges up to 80 km

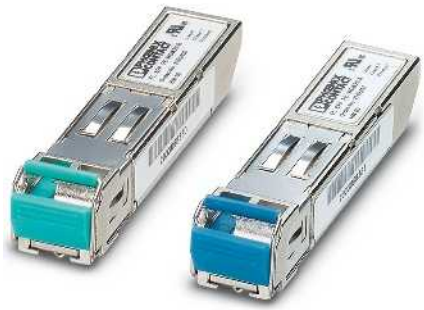

WDM technology,
for transmission via a single glass fiber

Gigabit transmission
with copper connection

Technical data

	FL SFP LX	FL SFP LH
	-	
	-	
	1 (LC single mode)	
	1 Gbps	
	1310 nm	1550 nm
	30 km (Fiberglass 9/125)	80 km (Fiberglass 9/125)
	250 m (Fiberglass 62.5/125)	-
	-	
	-	
	SFP module as FO port	
	via SFP slot	
	3.3 V (via Factoryline switch)	
	-40°C ... 85°C (non-condensing)	
	30% ... 95% (non-condensing)	

Ordering data

Type	Order No.	Pcs./Pkt.
FL SFP LX10-B	1025401	1
FL SFP LX	2891767	1
FL SFP LH	2989912	1

Technical data

	FL SFP FE WDM20-SET	FL SFP WDM10-SET
	-	
	-	
	1 (LC single mode)	
	100 Mbps	1 Gbps
	1310 nm / 1550 nm (TX)	
	20 km (Fiberglass 9/125)	10 km (Fiberglass 9/125)
	-	
	-	
	-	
	SFP module as FO port	
	via SFP slot	
	3.3 V (via Factoryline switch)	
	-40°C ... 75°C	
	-	

Ordering data

Type	Order No.	Pcs./Pkt.
FL SFP FE WDM20-SET	2702439	1
FL SFP FE WDM20-A	2702437	1
FL SFP FE WDM20-B	2702438	1
FL SFP WDM10-SET	2702442	1
FL SFP WDM10-A	2702440	1
FL SFP WDM10-B	2702441	1

Technical data

1 (RJ45 port)
1 Gbps
-
-
-
-
-
-
-
SFP module as copper port
via SFP slot
3.3 V (via Factoryline switch)
-40°C ... 85°C (non-condensing)
-

Ordering data

Type	Order No.	Pcs./Pkt.
FL SFP GT	2989420	1

Security routers for DIN rails

The compact and fanless DIN rail devices in metal housing suitable for industrial applications have an SD card slot at the front for configuration memory. The SD cards can be used for starting up or replacing the devices quickly and easily.

The devices feature an extended temperature range and contain a buffered real-time clock and trusted platform module (TPM) for secure and reliable key generation and management.

The **FL MGUARD RS4000** devices provide high-availability high-end security for industry and create a remote maintenance infrastructure for the secure connection of machines and systems.

The **FL MGUARD RS2000** devices are designed for price-sensitive applications with fewer complex requirements and allow secure remote maintenance of machines and systems in the field via the Internet. In this context, they are used as industrial remote service routers with a simplified configuration.

Secure networks also with Gigabit

The new router generation for top-class security:

– Replaceable configuration memory
– Comprehensive connection options
– Flexible routing
– Intelligent stateful inspection firewall
– Secure remote services (VPN) in accordance with IPsec standard or as OpenVPN client
– Central management tool available

VPN licenses

Operation with up to 250 parallel VPN tunnels is possible with optional VPN licenses.

Notes:

Central device management software, the Device Manager for FL MGUARD devices, can be found on page 342

Router for standard routing

Technical data

Ethernet interface		
Number of ports		2 (RJ45 ports)
Transmission speed		10/100 Mbps
Function		
Basic functions		Router for standard routing, NAT, 1:1-NAT and port forwarding
SNMP – Simple Network Management Protocol		SNMPv1, v2, v3
Security functions		
VPN throughput		-
Number of VPN tunnels		-
Encryption methods		-
Internet Protocol Security (IPsec) mode		-
Authentication		-
Data integrity		MD5, SHA-1, SHA 256, SHA-512
Firewall data throughput		-
Firewall rules		-
Filtering		-
Protection against		IP spoofing
Routing		Standard routing, NAT, 1:1-NAT, port forwarding
Power supply		
Supply voltage		24 V DC
Typical current consumption		100 mA (at U_S = 24 V DC)
General data		
Dimensions	W / H / D	45 mm / 130 mm / 114 mm
Ambient temperature (operation)		-20°C ... 60°C
EMC note		Class A product, see page 527

Ordering data

Description	Type	Order No.	Pcs./Pkt.
Router/firewall - Without VPN - With VPN	**FL MGUARD RS2000 TX/TX-B**	2702139	1

Accessories

Program and configuration memory, plug-in	**SD FLASH 512MB**	2988146	1
License for **lifetime software update** of FL MGUARD field devices	**FL MGUARD LIC LIFETIME FW**	2700184	1
License for activating CIFS Integrity Monitoring (CIM) on FL MGUARD			
License for activating the OPC inspector function on an FL MGUARD			
License for activating the firewall/router redundancy function on an FL MGUARD device pair			
License for activating the firewall/router and VPN redundancy function on an FL MGUARD device pair			

Router with simplified 2-click firewall and VPN

Ex:

Technical data

2 (RJ45 ports) 10/100 Mbps	
Router with firewall and VPN for 2 tunnels (fixed), metal housing, slot for any SD memory card, extended temperature range, high-performance firewall/VPN: up to 124 Mbps / 40 Mbps	
SNMPv1, v2, v3	
max. 40 Mbps (Router mode, VPN bidirectional throughput)	
2 (fixed, IPsec (IETF standard))	
DES, 3DES, AES-128, -192, -256 ESP tunnel / ESP transport X.509v3 certificates with RSA or PSK	
MD5, SHA-1, SHA 256, SHA-512 max. 124 Mbps (Router mode, default firewall rules, bidirectional throughput) Simple stateful inspection firewall, no user firewall, no conditional firewall, no rule sets	
Incoming or outgoing traffic - Standard routing, NAT, 1:1-NAT, port forwarding	
24 V DC 100 mA (at U_S = 24 V DC)	
45 mm / 130 mm / 114 mm -20°C ... 60°C Class A product, see page 527	

Ordering data

Type	Order No.	Pcs./Pkt.
FL MGUARD RS2000 TX/TX VPN	2700642	1

Accessories

SD FLASH 512MB	2988146	1
FL MGUARD LIC LIFETIME FW	2700184	1

Router with intelligent firewall and VPN

Ex:

Technical data

	FL MGUARD RS4000 TX/TX	FL MGUARD RS4000 TX/TX VPN
2 (RJ45 ports) 10/100 Mbps		
Router with intelligent firewall (VPN, 10 tunnels as an option, up to 250 with additional license), CIFS Integrity Monitoring (as an option), metal housing, slot for SD memory card, extended temperature range, high-performance firewall/VPN (as an option): up to 124 Mbps/40 Mbps (as an option)		Router with intelligent firewall and VPN for 10 tunnels (up to 250 supported with optional additional license), CIFS Integrity Monitoring (as an option), metal housing, slot for SD memory card, extended temperature range, high-performance firewall/VPN: up to 124 Mbps/40 Mbps
SNMPv1, v2, v3		
max. 40 Mbps (Router mode, VPN bidirectional throughput)		
0 (up to 250 tunnels with additional license as an option)		10 (up to 250 tunnels with additional license as an option)
DES, 3DES, AES-128, -192, -256 ESP tunnel / ESP transport X.509v3 certificates with RSA or PSK		
MD5, SHA-1, SHA 256, SHA-512 max. 124 Mbps (Router mode, default firewall rules, bidirectional throughput) Configurable stateful inspection firewall with full scope of functions		
MAC and IP addresses, ports, protocols IP spoofing, DoS and Syn Flood Protection Standard routing, NAT, 1:1-NAT, port forwarding		
24 V DC (redundant) 100 mA (at U_S = 24 V DC)		
45 mm / 130 mm / 114 mm -20°C ... 60°C Class A product, see page 527		

Ordering data

Type	Order No.	Pcs./Pkt.
FL MGUARD RS4000 TX/TX	2700634	1
FL MGUARD RS4000 TX/TX VPN	2200515	1

Accessories

SD FLASH 512MB	2988146	1
FL MGUARD LIC LIFETIME FW	2700184	1
FL MGUARD LIC CIM	2701083	1
FL MGUARD LIC OPC INSP	2702191	1
FL MGUARD LIC FW RD	2701356	1
FL MGUARD LIC FW/VPN RD	2702193	1

Gigabit router with firewall, replaceable memory

Technical data

	FL MGUARD GT/GT	FL MGUARD GT/GT VPN
2 (Combo ports) 10/100/1000 Mbps (SFP module: 100/1000 Mbps)		
Router with intelligent firewall and Gigabit connectivity		Router with intelligent firewall and Gigabit connectivity and VPN
SNMPv1, v2, v3		
max. 106 Mbps (Router mode, VPN bidirectional throughput)		
0 (up to 250 tunnels with additional license as an option)		10 (up to 250 tunnels with additional license as an option)
DES, 3DES, AES-128, -192, -256 -		ESP tunnel / ESP transport
-		X.509v3 certificates with RSA or PSK
MD5, SHA-1, SHA 256, SHA-512 max. 417 Mbps (Router mode, default firewall rules, bidirectional throughput) Configurable stateful inspection firewall		
MAC and IP addresses, ports, protocols IP spoofing, DoS and Syn Flood Protection Standard routing, NAT, 1:1-NAT, port forwarding		
24 V DC (redundant) 270 mA (at U_S = 24 V DC)		
128 mm / 110 mm / 69 mm -20°C ... 60°C Class A product, see page 527		

Ordering data

Type	Order No.	Pcs./Pkt.
FL MGUARD GT/GT	2700197	1
FL MGUARD GT/GT VPN	2700198	1

Accessories

FL MEM PLUG	2891259	1
FL MGUARD LIC LIFETIME FW	2700184	1
FL MGUARD LIC CIM	2701083	1
FL MGUARD LIC OPC INSP	2702191	1
FL MGUARD LIC FW RD	2701356	1
FL MGUARD LIC FW/VPN RD	2702193	1

Security routers for DIN rails

The compact, fanless security routers with 5 unmanaged ports or 4 managed ports and DMZ port for mutual protection of several networks are equipped with the simplified 2-click firewall or intelligent firewall with full functionality and easy configuration.

The devices have an SD card slot at the front for configuration memory. The SD cards can be used for starting up or replacing the devices quickly and easily.

The devices feature an extended temperature range and contain a buffered real-time clock and trusted platform module (TPM) for secure and reliable key generation and management.

VPN licenses

Operation with up to 250 parallel VPN tunnels is possible with optional VPN licenses.

Notes:

Central device management software, the Device Manager for FL MGUARD devices, can be found on page 342

Router with simplified 2-click firewall, VPN, and integrated switch

Technical data

Ethernet interface		
Number of ports		6 (RJ45 ports)
Transmission speed		10/100 Mbps
Function		
Basic functions		Router with firewall and VPN for 2 tunnels, integrated 5-port switch, metal housing, slot for SD memory card, extended temperature range, high-performance firewall/VPN: up to 124 Mbps/40 Mbps
SNMP – Simple Network Management Protocol		SNMPv1, v2, v3
Security functions		
VPN throughput		max. 40 Mbps (Router mode, VPN bidirectional throughput)
Number of VPN tunnels		2
Encryption methods		DES, 3DES, AES-128, -192, -256
Internet Protocol Security (IPsec) mode		ESP tunnel / ESP transport
Authentication		X.509v3 certificates with RSA or PSK
Data integrity		MD5, SHA-1, SHA 256, SHA-512
Firewall data throughput		max. 130 Mbps (Router mode, default firewall rules, bidirectional throughput)
Firewall rules		Simple stateful inspection firewall, no user firewall, no conditional firewall, no rule sets
Filtering		Incoming or outgoing traffic
Protection against		-
Routing		Standard routing, NAT, 1:1-NAT, port forwarding
Power supply		
Supply voltage		24 V DC (redundant)
Typical current consumption		100 mA (at U_S = 24 V DC)
General data		
Dimensions	W / H / D	45 mm / 130 mm / 114 mm
Ambient temperature (operation)		-20°C ... 60°C
EMC note		Class A product, see page 527

Ordering data

Description	Type	Order No.	Pcs./Pkt.
Router/firewall			
- Without VPN			
- With VPN	**FL MGUARD RS2005 TX VPN**	2701875	1

Accessories

Program and configuration memory, plug-in	**SD FLASH 512MB**	2988146	1
License for **lifetime software update** of FL MGUARD field devices	**FL MGUARD LIC LIFETIME FW**	2700184	1
License for activating CIFS Integrity Monitoring (CIM) on FL MGUARD			
License for activating the OPC inspector function on an FL MGUARD			
License for activating the firewall/router redundancy function on an FL MGUARD device pair			
License for activating the firewall/router and VPN redundancy function on an FL MGUARD device pair			

Router with intelligent firewall and integrated switch

Router with intelligent firewall, VPN, and integrated switch

Router with intelligent firewall, with VPN as an option

Technical data

		FL MGUARD DELTA TX/TX VPN / FL MGUARD DELTA TX/TX
6 (RJ45 ports) 10/100 Mbps	6 (RJ45 ports) 10/100 Mbps	2 (RJ45) 10/100 Mbps
Router with intelligent firewall, integrated 4-port managed switch, opt. VPN (opt. for 10 tunnels, up to 250 tunnels with additional license), CIFS Integrity Monitoring (opt.), metal housing, slot for SD memory card, extended temperature range, high-performance firewall/VPN: up to 124 Mbps / 40 Mbps	Router with intelligent firewall, integrated 4-port managed switch and VPN for 10 tunnels (opt. up to 250 with additional license), CIFS Integrity Monitoring (opt.), metal housing, slot for SD memory card, extended temperature range, high-performance firewall/VPN: up to 124 Mbps / 40 Mbps	Router with intelligent firewall and VPN for 10 tunnels (up to 250 supported with optional additional license), CIFS Integrity Monitoring (as an option), metal housing, slot for SD memory card Router with intelligent firewall (VPN, 10 tunnels as an option, up to 250 possible with additional license), CIFS Integrity Monitoring (as an option), metal housing, slot for SD memory card, extended temperature range, high-performance firewall/VPN (as an option): up to 99 Mbps / 35 Mbps (as an option)
SNMPv1, v2, v3	SNMPv1, v2, v3	SNMPv1, v2, v3
max. 42 Mbps (Router)	max. 42 Mbps (Router)	max. 42 Mbps (Router mode, VPN bidirectional throughput)
-	10 (up to 250 tunnels with additional license as an option)	As an option, 10 tunnels up to 250 tunnels, IPsec (IETF) standard with additional license FL MGUARD LIC VPN-10/Order No. 2700194 or FL MGUARD LIC VPN-250/Order No. 2700193 or 2700192.
DES, 3DES, AES-128, -192, -256	DES, 3DES, AES-128, -192, -256	DES, 3DES, AES-128, -192, -256
-	ESP tunnel / ESP transport	-
-	X.509v3 certificates with RSA or PSK	-
MD5, SHA-1, SHA 256, SHA-512	MD5, SHA-1, SHA 256, SHA-512	MD5, SHA-1, SHA 256, SHA-512
max. 130 Mbps (Router mode, default firewall rules, bidirectional throughput)	max. 130 Mbps (Router mode, default firewall rules, bidirectional throughput)	max. 130 Mbps (Router mode, default firewall rules, bidirectional throughput)
Configurable stateful inspection firewall with full scope of functions	Configurable stateful inspection firewall with full scope of functions	Configurable stateful inspection firewall with full scope of functions
MAC and IP addresses, ports, protocols IP spoofing, DoS and Syn Flood Protection Standard routing, NAT, 1:1-NAT, port forwarding	MAC and IP addresses, ports, protocols IP spoofing, DoS and Syn Flood Protection Standard routing, NAT, 1:1-NAT, port forwarding	MAC and IP addresses, ports, protocols IP spoofing, DoS and Syn Flood Protection Standard routing, NAT, 1:1-NAT, port forwarding
24 V DC (redundant) 100 mA (at U_S = 24 V DC)	24 V DC (redundant) 100 mA (at U_S = 24 V DC)	230 V AC 13 mA
45 mm / 130 mm / 114 mm -20°C ... 60°C Class A product, see page 527	45 mm / 130 mm / 114 mm -20°C ... 60°C Class A product, see page 527	130 mm / 50 mm / 114 mm 5°C ... 40°C

Ordering data

Type	Order No.	Pcs./Pkt.
FL MGUARD RS4004 TX/DTX	2701876	1

Accessories

SD FLASH 512MB	2988146	1
FL MGUARD LIC LIFETIME FW	2700184	1
FL MGUARD LIC CIM	2701083	1
FL MGUARD LIC OPC INSP	2702191	1
FL MGUARD LIC FW RD	2701356	1
FL MGUARD LIC FW/VPN RD	2702193	1

Ordering data

Type	Order No.	Pcs./Pkt.
FL MGUARD RS4004 TX/DTX VPN	2701877	1

Accessories

SD FLASH 512MB	2988146	1
FL MGUARD LIC LIFETIME FW	2700184	1
FL MGUARD LIC CIM	2701083	1
FL MGUARD LIC OPC INSP	2702191	1
FL MGUARD LIC FW RD	2701356	1
FL MGUARD LIC FW/VPN RD	2702193	1

Ordering data

Type	Order No.	Pcs./Pkt.
FL MGUARD DELTA TX/TX	2700967	1
FL MGUARD DELTA TX/TX VPN	2700968	1

Accessories

SD FLASH 512MB	2988146	1
FL MGUARD LIC LIFETIME FW	2700184	1
FL MGUARD LIC CIM	2701083	1
FL MGUARD LIC OPC INSP	2702191	1
FL MGUARD LIC FW RD	2701356	1
FL MGUARD LIC FW/VPN RD	2702193	1

Security appliances for special applications

The **FL MGUARD...-M** provides all the relevant maritime approvals and is therefore the ideal device for onshore and offshore applications.

The **FL MGUARD...-P** is specifically designed for process technology. In addition to its conformal coating, the device provides ATEX and IECEx approvals, as well as a very wide temperature range. Using the DPI (Deep Packet Inspection) function for OPC Classic and Modbus/TCP, the device can be used as an Application Layer firewall.

The **FL MGUARD CENTERPORT** delivers more than enough performance for large remote maintenance centers or for use as an extremely powerful firewall. To increase availability, the device has two separate power supply units. With optional redundancy licenses, you can develop the device into a high-availability solution.

Notes:

Central device management software, the Device Manager for FL MGUARD devices, can be found on page 342

With maritime approvals

Ex:

Technical data

Ethernet interface		
Number of ports		2 (RJ45 ports)
Transmission speed		10/100 Mbps
Function		
Basic functions		Router with intelligent firewall and VPN for 10 tunnels (up to 250 supported with optional additional license), CIFS Integrity Monitoring (as an option), metal housing, slot for SD memory card, extended temperature range, high-performance firewall/VPN: up to 124 Mbps/40 Mbps
SNMP – Simple Network Management Protocol		SNMPv1, v2, v3
Security functions		
VPN throughput		max. 40 Mbps (Router mode, VPN bidirectional throughput)
Number of VPN tunnels		10 (up to 250 tunnels with additional license as an option)
Encryption methods		DES, 3DES, AES-128, -192, -256
Internet Protocol Security (IPsec) mode		ESP tunnel / ESP transport
Authentication		X.509v3 certificates with RSA or PSK
Data integrity		MD5, SHA-1, SHA 256, SHA-512
Firewall data throughput		max. 124 Mbps (Router mode, default firewall rules, bidirectional throughput)
Firewall rules		Configurable stateful inspection firewall with full scope of functions
Filtering		MAC and IP addresses, ports, protocols
Protection against		IP spoofing, DoS and Syn Flood Protection
Routing		Standard routing, NAT, 1:1-NAT, port forwarding
Power supply		
Supply voltage		24 V DC (redundant)
Supply voltage range		11 V DC ... 36 V DC
Typical current consumption		100 mA (at U_S = 24 V DC)
General data		
Dimensions	W / H / D	45 mm / 130 mm / 114 mm
Ambient temperature (operation)		-40°C ... 70°C
EMC note		Class A product, see page 527

Ordering data

Description	Type	Order No.	Pcs./Pkt.
Security appliance, for special applications			
	FL MGUARD RS4000 TX/TX VPN-M	2702465	1

Accessories

Program and configuration memory, plug-in	**SD FLASH 512MB**	2988146	1
License for **lifetime software update** of FL MGUARD field devices	**FL MGUARD LIC LIFETIME FW**	2700184	1
License for activating CIFS Integrity Monitoring (CIM) on FL MGUARD	**FL MGUARD LIC CIM**	2701083	1
License for activating the OPC inspector function on an FL MGUARD	**FL MGUARD LIC OPC INSP**	2702191	1
License for activating the firewall/router redundancy function on an FL MGUARD device pair	**FL MGUARD LIC FW RD**	2701356	1
License for activating the firewall/router and VPN redundancy function on an FL MGUARD device pair			

For process engineering applications

High performance with high availability

Ex:

Technical data

2 (RJ45 ports)	4 (RJ45 ports)
10/100 Mbps	10/100/1000 Mbps
Router with intelligent firewall and OPC/Modbus inspector with ATEX and IECEx approval, from FW 8.5: VPN for up to 250 tunnels, CIFS Integrity Monitoring, redundancy function, metal housing, slot for SD memory card, extended temperature range, high-performance firewall/VPN: up to 124 Mbps / 40 Mbps	Security appliance for up to 3000 parallel VPN tunnels (with additional licenses) and more than 600 Mbps VPN data throughput (with hardware encryption)
SNMPv1, v2, v3	SNMPv1, v2, v3
max. 40 Mbps (Router mode, VPN bidirectional throughput)	600 Mbps (Router mode, VPN bidirectional throughput)
250 (Firmware 8.5 or later)	0 (in the best case, up to 3000 tunnels with additional licenses)
DES, 3DES, AES-128, -192, -256	DES, 3DES, AES-128, -192, -256
ESP tunnel / ESP transport	ESP tunnel / ESP transport
X.509v3 certificates with RSA or PSK	X.509v3 certificates with RSA or PSK
MD5, SHA-1, SHA 256, SHA-512	MD5, SHA-1, SHA 256, SHA-512
max. 124 Mbps (Router mode, default firewall rules, bidirectional throughput)	2000 Mbps (Router mode, default firewall rules, bidirectional throughput)
Configurable stateful inspection firewall with full scope of functions, deep packet inspection for OPC classic	Configurable stateful inspection firewall with full scope of functions
MAC and IP addresses, ports, protocols	MAC and IP addresses, ports, protocols
IP spoofing, DoS and Syn Flood Protection	IP spoofing, DoS and Syn Flood Protection
Standard routing, NAT, 1:1-NAT, port forwarding	Standard routing, NAT, 1:1-NAT, port forwarding
24 V DC (redundant)	-
11 V DC ... 36 V DC	2x 100 V AC ... 240 V AC (redundant)
100 mA (at U_S = 24 V DC)	-
45 mm / 130 mm / 114 mm	447 mm / 44 mm / 458 mm
-40°C ... 70°C	0°C ... 45°C
Class A product, see page 527	

Ordering data

Type	Order No.	Pcs./Pkt.
FL MGUARD RS4000 TX/TX-P	2702259	1

Accessories

SD FLASH 512MB	2988146	1
FL MGUARD LIC LIFETIME FW	2700184	1
FL MGUARD LIC CIM	2701083	1
FL MGUARD LIC OPC INSP	2702191	1
FL MGUARD LIC FW RD	2701356	1
FL MGUARD LIC FW/VPN RD	2702193	1

Ordering data

Type	Order No.	Pcs./Pkt.
FL MGUARD CENTERPORT	2702547	1

Accessories

SD FLASH 512MB	2988146	1
FL MGUARD LIC LIFETIME FW	2700184	1
FL MGUARD LIC CIM	2701083	1
FL MGUARD LIC OPC INSP	2702191	1
FL MGUARD LIC FW RD	2701356	1
FL MGUARD LIC FW/VPN RD	2702193	1

Firewall/router for office-based/mobile use

The **FL MGUARD SMART2** features maximum possible security and performance in a minimum amount of space.

With its robust housing and uncomplicated power supply via any USB port, the **FL MGUARD SMART2** is the ideal solution for the mobile protection of critical company resources.

The device is particularly suitable for the mobile and stationary protection of workstations and environments close to the production process with low requirements for industrial hardening.

It can be used as a secure firewall between office and production networks, as a remote maintenance client or as a security router for small workgroups.

Security routers without DIN rail mounting

Security is fundamental for PC-based automation. Do not leave any room for attack.

Distributed protection concepts where automation cells are protected individually provide maximum security.

In order to protect your PC reliably and easily in the network, PCI bus-based **FL MGUARD PCI** cards are the ideal choice. mGuard technology features:

– Maximum security
– Optimum performance
– Central management

VPN licenses

Operation with up to 250 parallel VPN tunnels is possible with optional VPN licenses.

Notes:

Central device management software, the Device Manager for FL MGUARD devices, can be found on page 342

Router with firewall for mobile use

EAC

Technical data

	FL MGUARD SMART2 VPN	FL MGUARD SMART2
Ethernet interface		
Number of ports	2 (RJ45)	
Transmission speed	10/100 Mbps	
Function		
Basic functions	Firewall/router for office use or mobile service technicians	
SNMP – Simple Network Management Protocol	SNMPv1, v2, v3	
Security functions		
Dynamic Host Configuration Protocol (DHCP) support	Server or Relay Agent	
Remote syslog logging	On external server	
VPN throughput	max. 42 Mbps (Router mode, VPN bidirectional throughput)	
Number of VPN tunnels	10 (up to 250 with license possible)	0 (up to 250 tunnels with additional license as an option)
Encryption methods	DES, 3DES, AES-128, -192, -256	
Internet Protocol Security (IPsec) mode	ESP tunnel / ESP transport	-
Authentication	X.509v3 certificates with RSA or PSK	-
Data integrity	MD5, SHA-1, SHA 256, SHA-512	
1:1 Network Address Translation (NAT) in the VPN	Supported	-
Firewall data throughput	max. 130 Mbps (Router mode, default firewall rules, bidirectional throughput)	
Firewall rules	Configurable stateful inspection firewall	
Filtering	MAC and IP addresses, ports, protocols	
Protection against	IP spoofing, DoS and Syn Flood Protection	
Routing	NAT, 1:1-NAT, Port Forwarding	
Power supply		
Supply voltage	5 V DC (from USB interface)	
General data		
Width	77 mm	
Degree of protection	IP30	
Ambient temperature (operation)	0°C ... 40°C	

Ordering data

Description	Type	Order No.	Pcs./Pkt.
Router with firewall			
- Without VPN	**FL MGUARD SMART2**	2700640	1
- With VPN	**FL MGUARD SMART2 VPN**	2700639	1

Accessories

Program and configuration memory, plug-in			
License for **lifetime software update** of FL MGUARD field devices	**FL MGUARD LIC LIFETIME FW**	2700184	1
License for activating CIFS Integrity Monitoring (CIM) on FL MGUARD	**FL MGUARD LIC CIM**	2701083	1
License for activating the OPC inspector function on an FL MGUARD	**FL MGUARD LIC OPC INSP**	2702191	1
License for activating the firewall/router redundancy function on an FL MGUARD device pair	**FL MGUARD LIC FW RD**	2701356	1
License for activating the firewall/router and VPN redundancy function on an FL MGUARD device pair	**FL MGUARD LIC FW/VPN RD**	2702193	1

Embedded router/firewall with VPN

Router with firewall and VPN for PCI

Router with firewall and VPN for PCIe

EAC

Technical data

1 (RJ45 port) 10/100 Mbps
Embedded router with intelligent firewall and VPN for 10 active tunnels
SNMPv1, v2, v3
Server or Relay Agent On external server max. 40 Mbps (Router mode, VPN bidirectional throughput)
10 (up to 250 tunnels with additional license as an option)
DES, 3DES, AES-128, -192, -256 ESP tunnel / ESP transport X.509v3 certificates with RSA or PSK
MD5, SHA-1, SHA 256, SHA-512 Supported max. 124 Mbps (Router mode, default firewall rules, bidirectional throughput) Configurable stateful inspection firewall with full scope of functions
MAC and IP addresses, ports, protocols IP spoofing, DoS and Syn Flood Protection Standard routing, NAT, 1:1-NAT, port forwarding
5 V DC
56 mm IP00 0°C ... 60°C

Ordering data

Type	Order No.	Pcs./Pkt.
FL MGUARD CORE TX VPN	2702831	1

Accessories

SD FLASH 512MB	2988146	1
FL MGUARD LIC LIFETIME FW	2700184	1
FL MGUARD LIC CIM	2701083	1
FL MGUARD LIC OPC INSP	2702191	1
FL MGUARD LIC FW RD	2701356	1
FL MGUARD LIC FW/VPN RD	2702193	1

cULus EAC

Technical data

2 (RJ45) 10/100 Mbps
Router with intelligent firewall and VPN for 10 tunnels (up to 250 supported with optional additional license), CIFS Integrity Monitoring (as an option), metal housing, slot for SD memory card, extended temperature range, high-performance firewall/VPN: up to 124 Mbps/40 Mbps
SNMPv1, v2, v3
Server or Relay Agent On external server max. 42 Mbps (Router)
10 (up to 250 tunnels with additional license as an option)
DES, 3DES, AES-128, -192, -256 ESP tunnel / ESP transport X.509v3 certificates with RSA or PSK
MD5, SHA-1, SHA 256, SHA-512 Supported max. 130 Mbps (Router mode, default firewall rules, bidirectional throughput) Configurable stateful inspection firewall with full scope of functions
MAC and IP addresses, ports, protocols IP spoofing, DoS and Syn Flood Protection Standard routing, NAT, 1:1-NAT, port forwarding
-
- IP00 0°C ... 70°C

Ordering data

Type	Order No.	Pcs./Pkt.
FL MGUARD PCI4000 VPN	2701275	1

Accessories

SD FLASH 512MB	2988146	1
FL MGUARD LIC LIFETIME FW	2700184	1
FL MGUARD LIC CIM	2701083	1
FL MGUARD LIC OPC INSP	2702191	1
FL MGUARD LIC FW RD	2701356	1
FL MGUARD LIC FW/VPN RD	2702193	1

cULus EAC

Technical data

2 (RJ45) 10/100 Mbps
Router with intelligent firewall and VPN for 10 tunnels (up to 250 supported with optional additional license), CIFS Integrity Monitoring (as an option), metal housing, slot for SD memory card, extended temperature range, high-performance firewall/VPN: up to 124 Mbps/40 Mbps
SNMPv1, v2, v3
Server or Relay Agent On external server max. 42 Mbps (Router)
10 (up to 250 tunnels with additional license as an option)
DES, 3DES, AES-128, -192, -256 ESP tunnel / ESP transport X.509v3 certificates with RSA or PSK
MD5, SHA-1, SHA 256, SHA-512 Supported max. 130 Mbps (Router mode, default firewall rules, bidirectional throughput) Configurable stateful inspection firewall with full scope of functions
MAC and IP addresses, ports, protocols IP spoofing, DoS and Syn Flood Protection Standard routing, NAT, 1:1-NAT, port forwarding
-
- IP00 0°C ... 70°C

Ordering data

Type	Order No.	Pcs./Pkt.
FL MGUARD PCIE4000 VPN	2701278	1

Accessories

SD FLASH 512MB	2988146	1
FL MGUARD LIC LIFETIME FW	2700184	1
FL MGUARD LIC CIM	2701083	1
FL MGUARD LIC OPC INSP	2702191	1
FL MGUARD LIC FW RD	2701356	1
FL MGUARD LIC FW/VPN RD	2702193	1

Network management software

Device Manager for FL MGUARD devices

Tool for the central configuration and management of any number of mGuard devices in the field.

– Template-based management tool
– Suitable for remote maintenance applications

FL Network Manager

SNMP-based configuration and firmware update software for the easy startup and monitoring of network components.

– Network topology detection
– Multi-device configuration

Central management software for FL MGUARD

Network management software for startup and monitoring

	Technical data	Technical data
Hardware requirements		
Processor	> 1 GHz	> 1.5 GHz
Main memory (RAM)	512 Mbyte	2 GByte
Hard disk memory	4 GByte (free memory space (server), 500 MB free memory space (client))	min. 1 GByte
Optical drive	CD-ROM	CD-RW/DVD-RW
Interfaces	Ethernet Port	Ethernet Port
Software requirements		
Operating system	Windows Server 2016 Windows Server 2012 R2 Windows Server 2008 R2 SP1 Windows 10 (only mdm Client) Windows 7 (only mdm Client) Ubuntu 16.04 LTS	Windows® 10 Windows® 8.1 (32-Bit/64-Bit) Windows® 7 (32-Bit/64-Bit)
Basic functions		
	Voucher for a license for MGUARD Device Manager, the central device management software for MGUARD devices for any number of devices in the field. For installation on a PC.	The FL Network Manager Basic software simplifies the startup of Managed Switches and provides a central configuration point
	-	With just a few clicks, the Network Manager identifies the network devices and, in addition to IP parameter assignment, enables easy multi-device firmware updates and configuration of the most important Industrial Ethernet functions for different types of devices, all at the same time.
Languages supported		
	English	English

	Ordering data			Ordering data		
Description	Type	Order No.	Pcs./Pkt.	Type	Order No.	Pcs./Pkt.
Central **device management software** for FL MGUARD devices, for installation on a PC. - For any number of devices in the field	**FL MGUARD DM UNLIMITED**	2981974	1			
Network management software				**FL NETWORK MANAGER BASIC**	2702889	1

PRP redundancy modules for parallel network redundancy

Energy networks rely on particularly high failsafe performance. The new PRP redundancy modules enable parallel redundancy without switch-over time in the event of a fault. You can therefore ensure maximum availability of your network.

Interruption-free communication

- The FL RED 2000E redundancy module is equipped with the Parallel Redundancy Protocol (PRP)
- Interoperability in high-availability networks is possible, as required in the energy sector
- The system continues to operate in the case of redundancy without switch-over time

Robust design

- Developed in accordance with the requirements of IEC 61850-3 and IEEE 1613: complies with the high requirements for network technology in this area
- Able to withstand voltage fluctuations due to a wide input voltage range of 18 V DC ... 58 V DC
- Robust metal housing
- Extended temperature range (-40°C ... +70°C)

Easy handling

- Creation of a high-availability network without configuration
- LED indicators provide on-site information regarding the status of the network and redundancy
- Alarm signal contact indicates the status of the module and network

IEC 61850-3

Technical data

		FL RED 2003E PRP	FL RED 2001E PRP 2LC
Ethernet interface			
Number of ports		3 (RJ45 ports)	1 (RJ45 port)
Transmission speed		10/100 Mbps	
Transmission distance		100 m (per segment)	
Fiber optic interface			
Interface		-	Ethernet FO
Number of ports		-	2 (LC multimode)
Transmission speed		-	100 Mbps (full duplex)
Connection method		-	LC
Transmission distance		-	2 km (per segment)
Function			
Basic functions		Ethernet redundancy module for the Parallel Redundancy Protocol	
Status and diagnostic indicators		LEDs: U_{S1}, U_{S2} (redundant voltage supply), link and activity per port	
Power supply			
Supply voltage		24 V DC (redundant) 48 V DC (redundant)	
Residual ripple		3.6 V_{PP}	
Supply voltage range		18 V DC ... 58 V DC	
Typical current consumption		250 mA (at U_S = 24 V DC)	
General data			
Dimensions	W / H / D	40 mm / 100 mm / 109 mm	
Degree of protection		IP20	
Ambient temperature (operation)		-40°C ... 70°C	
Permissible humidity (operation)		10% ... 95% (non-condensing)	
Noise emission		EN 61000-6-4	
Noise immunity		IEC 61850-3, IEEE 1613, EN 61000-6-2: 2005	
EMC note		Class A product, see page 527	

Ordering data

Description	Type	Order No.	Pcs./Pkt.
Redundancy module			
- 3 RJ45 ports	**FL RED 2003E PRP**	**2701863**	1
- 1 RJ45 port, 2 LC fiber optic ports (multimode)	**FL RED 2001E PRP 2LC**	**2701864**	1

Power over Ethernet components

The **FL PD 1001T GT** PoE splitter enables data and power to be separated in order to supply non-PoE-capable end devices via PoE.

The **FL PSE 2TX** PoE module can be used to convert two standard Ethernet ports into two PoE ports.

Power over Ethernet splitter

Power over Ethernet injector

Ex:

		Technical data	Technical data
Ethernet interface			
Number of ports		1 (RJ45 port)	2 (RJ45 ports)
Transmission speed		10/100/1000 Mbps	10/100 Mbps
Connection method		RJ45	RJ45
Ethernet interface (PoE)			
Number of ports		1 (RJ45 port)	2 (RJ45 ports)
Transmission speed		10/100/1000 Mbps	10/100 Mbps
Connection method		RJ45	RJ45
Function			
Basic functions		PD, complies with IEEE 802.3af/at	PSE/midspan, complies with IEEE 802.3af
Status and diagnostic indicators		LEDs: POE, 24 V DC	LEDs: US, PoE detection per port
Power supply			
Supply voltage		48 V DC (via PoE)	24 V DC (via COMBICON; max. conductor cross section 2.5 mm^2)
Residual ripple		-	3.6 V_{PP}
Supply voltage range		44 V DC ... 57 V DC	18.5 V DC ... 30.5 V DC
Typical current consumption		-	typ. 100 mA (during no load; approx. 1800 mA at 24 V at the input with maximum load and 25°C ambient temperature)
General data			
Dimensions	W / H / D	40 mm / 100 mm / 109 mm	45 mm / 99 mm / 112 mm
Degree of protection		IP20	IP20
Ambient temperature (operation)		-40°C ... 70°C	0°C ... 55°C
Permissible humidity (operation)		10% ... 95% (non-condensing)	30% ... 95% (non-condensing)
EMC note		Class A product, see page 527	Class A product, see page 527

	Ordering data			Ordering data		
Description	**Type**	**Order No.**	Pcs./Pkt.	**Type**	**Order No.**	Pcs./Pkt.
Power over Ethernet splitter	**FL PD 1001 T GT**	**2891042**	1			
Power over Ethernet module (PSE)				**FL PSE 2TX**	**2891013**	1

PoE injectors

- Midspan injectors with a PoE port
- Suitable for retrofitting, e.g., for upstream switch without PoE function
- When connecting to PoE-capable end devices, e.g., IP cameras, both devices negotiate the electrical power requirements autonomously
- DIP switches for selecting the cable pairs for power transmission
- Compliant with IEEE 802.3 af (PoE) and IEEE 802.3 at (PoE+) up to 30 W
- Product versions up to 60 W for 4-pair PoE (PoE++)

RJ45 to RJ45, 30 W

Ex:

RJ45 to RJ45, 60 W

Ex:

	Technical data		Technical data	
	INJ 1000	INJ 1100-T	INJ 1010	INJ 1110-T
Supply				
Nominal supply voltage	24 V DC / 48 V DC		24 V DC / 48 V DC	
Supply voltage range	18 V DC ... 57 V DC		18 V DC ... 57 V DC	
Max. current consumption	2.1 A 1.4 A (24 V DC) 0.7 A (48 V DC)		4.2 A 2.73 A (24 V DC) 1.34 A (48 V DC)	
Ethernet interface				
Connection method	RJ45 CAT5e		RJ45 CAT5e	
Ethernet interface (PoE)				
Transmission speed	10/100/1000 Mbps		10/100/1000 Mbps	
Connection method	RJ45 socket		RJ45 socket	
Output power	30 W		60 W	
Nominal output voltage	54 V DC (PoE)		54 V DC (PoE)	
Functions				
Basic functions	PSE/Midspan, compliant with IEEE 802.3af, at		PSE/Midspan, compliant with IEEE 802.3af, at	
General data				
Dimensions W / H / D	30.2 mm / 130 mm / 120 mm		30.2 mm / 130 mm / 120 mm	
Degree of protection	IP20		IP20	
Electrical isolation	-	VCC // FE // PoE	-	VCC // FE // PoE
Test voltage	-	1.5 kV AC (50 Hz, 1 min.)	-	1.5 kV AC (50 Hz, 1 min.)
Conformance/approvals				
UL, USA/Canada	Class I, Div. 2, Groups A, B, C, D, T4	Class I, Zone 2, AEx nA IIC T4, Ex nA IIC Gc X T4 Class I, Division 2, Groups A, B, C, D	Class I, Div. 2, Groups A, B, C, D, T4	Class I, Zone 2, AEx nA IIC T4, Ex nA IIC Gc X T4 Class I, Division 2, Groups A, B, C, D
Noxious gas test	ISA-S71.04-1985 G3 Harsh Group A		ISA-S71.04-1985 G3 Harsh Group A	
EMC note	Class A product, see page 527			

	Ordering data			Ordering data		
Description	Type	Order No.	Pcs./Pkt.	Type	Order No.	Pcs./Pkt.
PoE injector						
- Ambient temperature (operation): 0°C ... +60°C	**INJ 1000**	2703005	1	**INJ 1010**	2703007	1
- Ambient temperature (operation): -40°C ... +75°C	**INJ 1000-T**	2703006	1	**INJ 1010-T**	2703008	1
- Ambient temperature (operation): -40°C ... +75°C, electrical isolation	**INJ 1100-T**	2703009	1	**INJ 1110-T**	2703010	1

PoE injectors

The midspan injectors connect Ethernet devices without PoE (e.g., switches) to PoE-capable end devices (e.g., IP cameras). As power sourcing equipment (PSE), the injector supplies the required power to a powered device (PD) via the data cable. The injector and end device negotiate the electrical power requirements autonomously.

Features:

- Compliant with IEEE 802.3 af (PoE) and IEEE 802.3 at (PoE+) up to 30 W
- Product versions up to 60 W for 4-pair PoE (PoE++)
- DIP switches for selecting the cable pairs for power transmission
- Versions with IDC, Push-in or screw connection for easily connecting the field cable without the effort of RJ45 connector assembly
- Tool-free shield contacting with strain relief
- Shield current monitoring with visual display of undesirable cable shield currents
- Electrical isolation of the internal power supply unit for protection against short circuits on the PoE side
- Integrated surge protection in accordance with IEC 61643-21 with IEC test classification C2

RJ45 to screw connection

Ex:

Technical data

		INJ 2101-T	INJ 2111-T
Supply			
Nominal supply voltage		24 V DC / 48 V DC	
Supply voltage range		18 V DC ... 57 V DC	
Max. current consumption		2.1 A 1.4 A (24 V DC) 0.7 A (48 V DC)	4.2 A 2.73 A (24 V DC) 1.34 A (48 V DC)
Ethernet interface			
Connection method		RJ45 CAT5e	
Ethernet interface (PoE)			
Transmission speed		10/100/1000 Mbps	
Connection method		Screw terminal block	
Output power		30 W	60 W
Nominal output voltage		54 V DC (PoE)	
Connection cross section rigid / flexible / AWG		0.14 - 1.5 mm² / 0.14 - 1.5 mm² / 28 - 16	
Strain relief		Tool-free	
Functions			
Basic functions		PSE/Midspan, compliant with IEEE 802.3af, at	
Shield current monitoring			
Switch-on threshold		≥ 30 mA	
Local diagnostics		Yellow LED	
General data			
Dimensions	W / H / D	30.2 mm / 130 mm / 120 mm	
Degree of protection		IP20	
Ambient temperature (operation)		-40°C ... 75°C	
Electrical isolation		VCC // SCM + FE // PoE	
Test voltage		1.5 kV AC (50 Hz, 1 min.)	
Conformance/approvals			
UL, USA/Canada		Class I, Zone 2, AEx nA IIC T4, Ex nA IIC Gc X T4 Class I, Division 2, Groups A, B, C, D	
Noxious gas test		ISA-S71.04-1985 G3 Harsh Group A	
EMC note		Class A product, see page 527	

Ordering data

Description	Type	Order No.	Pcs./Pkt.
PoE injector, with electrical isolation			
- Output power up to 30 W (PoE, PoE+)	**INJ 2101-T**	2703011	1
- Output power up to 60 W (PoE++)	**INJ 2111-T**	2703013	1

RJ45 to IDC connection

RJ45 to Push-in connection

Ex:

Technical data	
INJ 2102-T	INJ 2112-T
24 V DC / 48 V DC 18 V DC ... 57 V DC	
2.1 A 1.4 A (24 V DC) 0.7 A (48 V DC)	4.2 A 2.73 A (24 V DC) 1.34 A (48 V DC)
RJ45 CAT5e	
10/100/1000 Mbps IDC connection	
30 W	60 W
54 V DC (PoE) 0.14 - 0.34 mm² / 0.14 - 0.34 mm² / 26 - 22 Tool-free	
PSE/Midspan, compliant with IEEE 802.3af, at	
≥ 30 mA Yellow LED	
30.2 mm / 130 mm / 120 mm IP20 -40°C ... 75°C VCC // SCM + FE // PoE 1.5 kV AC (50 Hz, 1 min.)	
Class I, Zone 2, AEx nA IIC T4, Ex nA IIC Gc X T4 Class I, Division 2, Groups A, B, C, D ISA-S71.04-1985 G3 Harsh Group A Class A product, see page 527	

Ex:

Technical data	
INJ 2103-T	INJ 2113-T
24 V DC / 48 V DC 18 V DC ... 57 V DC	
2.1 A 1.4 A (24 V DC) 0.7 A (48 V DC)	4.2 A 2.73 A (24 V DC) 1.34 A (48 V DC)
RJ45 CAT5e	
10/100/1000 Mbps Push-in connection	
30 W	60 W
54 V DC (PoE) 0.2 - 1.5 mm² / 0.2 - 1.5 mm² / 26 - 16 Tool-free	
PSE/Midspan, compliant with IEEE 802.3af, at	
≥ 30 mA Yellow LED	
30.2 mm / 130 mm / 120 mm IP20 -40°C ... 75°C VCC // SCM + FE // PoE 1.5 kV AC (50 Hz, 1 min.)	
Class I, Zone 2, AEx nA IIC T4, Ex nA IIC Gc X T4 Class I, Division 2, Groups A, B, C, D ISA-S71.04-1985 G3 Harsh Group A Class A product, see page 527	

Ordering data

Type	Order No.	Pcs./Pkt.
INJ 2102-T	**2703012**	1
INJ 2112-T	**2703014**	1

Ordering data

Type	Order No.	Pcs./Pkt.
INJ 2103-T	**1004065**	1
INJ 2113-T	**1004066**	1

IP communication via any two-wire cables up to 20 km

Existing two-wire cables can be used for networking. The system can be extended during operation without causing any adverse impact.

Basic features of fast startup via Plug and Play

– No configuration or settings necessary
– Automatic topology and data rate detection saves time and money
– Redundancy by means of RSTP (Rapid Spanning Tree Protocol)
– VLAN (Virtual Local Area Network) for logically separated IP networks
– Flexible use: point-to-point with double the bandwidth in 4-wire operation as well as line and ring topology with up to 50 devices

Unmanaged Ethernet extender

– No network configuration or IP address required
– Transparent transmission of all standard protocols including EtherNet/IP™, Modbus/TCP, PROFINET, PROFIsafe, EtherCAT®, KNX, BACnet/IP, etc.

Easy connection and monitoring of large networks

All extender devices and paths can be easily monitored remotely using a single managed device.

Managed Ethernet extender

– Alerts sent regarding all system events via SNMP (Simple Network Management Protocol)
– Remote diagnostics via IP: web-based or SNMP
– Integrated, replaceable SHDSL surge protection, automatic notification when replacement threshold reached or in the event of overload

Separate critical IP networks virtually with VLAN and ensure availability by means of RSTP redundancy

VLAN and RSTP are now also supported by the new firmware v5.xx. A free upgrade is available for devices that have already been installed.

VLAN – Virtual, logically separated IP networks

VLAN enables you to separate physical networks into logical subnetworks. As a result, communication is only possible within a VLAN, thereby increasing security in the overall network.

Startup without expert knowledge

– VLAN configuration via software wizard
– Replacement during servicing via Plug and Play

Redundancy by means of RSTP

RSTP enables you to set up redundant ring or point-to-point topologies. The protocol automatically disables duplicate or failed paths, thereby increasing network availability.

Your web code: #0943

Supply	
Supply voltage range	
Supply voltage	
Nominal current consumption	
Ethernet interface	
Connection method	
Transmission speed	
SHDSL interface	
Connection method	
Transmission speed	
USB interface	
Connection method	
Functions	
Management	
Digital output	
Number of outputs	
Signal range	
Behavior of outputs	
General data	
Dimensions	W / H / D
Ambient temperature (operation)	
Electrical isolation	
Test voltage	
Electromagnetic compatibility	
EMC note	

Description
Ethernet extender, for distances of up to 20 km on in-house copper cables - for point-to-point, line, ring, and star structures - for point-to-point connections
System power supply, primary-switched
DIN rail connector (optional), for routing through the supply voltage and data signal, two pieces are required per device
Replaceable surge protection module, with two-wire protection for floating SHDSL cables, two-level protective circuit
DATATRAB adapter, protective adapter for insertion in the data cable
DATATRAB adapter, protective adapter with RJ45 and screw connection for two SHDSL telecommunications interfaces
Program and configuration memory, plug-in

Managed Ethernet extender, 2 SHDSL ports, replaceable surge protection

Ex:

Technical data

10 V DC ... 60 V DC 24 V DC ±5%
90 mA (60 V DC)
RJ45 socket 10/100 Mbps, auto negotiation
SHDSL interface in accordance with ITU-T G.991.2.bis
Push-in spring connection 4-wire operation: 64 kbps ... 30 Mbps 2-wire operation: 32 kbps ... 15.3 Mbps
-
Web-based management: Diagnostics, log book, customized configuration
2 Depends on the operating voltage ≤ 500 mA (Short-circuit-proof) -
60 mm / 130 mm / 160 mm -25°C ... 60°C
VCC // Ethernet // DSL (A) // DSL (B) // FE 1.5 kV AC (50 Hz, 1 min.) Conformance with EMC Directive 2014/30/EU Class A product, see page 527

Ordering data

Type	Order No.	Pcs./Pkt.
TC EXTENDER 6004 ETH-2S	2702255	1

Accessories

MINI-SYS-PS-100-240AC/24DC/1.5	2866983	1
TC EXTENDER PT-IQ-2S	2702258	1
DT-LAN-CAT.6+	2881007	1
SD FLASH 512MB	2988146	1

Managed Ethernet extender, 1 SHDSL port, replaceable surge protection

Ex:

Technical data

10 V DC ... 60 V DC 24 V DC ±5%
80 mA (60 V DC)
RJ45 socket 10/100 Mbps, auto negotiation
SHDSL interface in accordance with ITU-T G.991.2.bis
Push-in spring connection 2-wire operation: 32 kbps ... 15.3 Mbps
-
Web-based management: Diagnostics, log book, customized configuration
1 Depends on the operating voltage ≤ 500 mA (Short-circuit-proof) -
60 mm / 130 mm / 160 mm -25°C ... 60°C
VCC // Ethernet // DSL (A/B) // FE 1.5 kV AC (50 Hz, 1 min.) Conformance with EMC Directive 2014/30/EU Class A product, see page 527

Ordering data

Type	Order No.	Pcs./Pkt.
TC EXTENDER 4001 ETH-1S	2702253	1

Accessories

MINI-SYS-PS-100-240AC/24DC/1.5	2866983	1
TC EXTENDER PT-IQ-1S	2702257	1
DT-LAN-CAT.6+	2881007	1
SD FLASH 512MB	2988146	1

Unmanaged Ethernet extender, 2 SHDSL ports

Ex:

Technical data

18 V DC ... 30 V DC 24 V DC ±5% (as an alternative or redundant, via backplane bus contact and system power supply)
< 180 mA (24 V DC)
RJ45 socket, shielded 10/100 Mbps, auto negotiation
SHDSL interface in accordance with ITU-T G.991.2.bis
2 x 2-pos. COMBICON plug-in screw terminal blocks 4-wire operation: 64 kbps ... 30 Mbps 2-wire operation: 32 kbps ... 15.3 Mbps
USB 2.0
Mini-USB type B, 5-pos.
Plug and Play, diagnostics via PSI-CONF software or web-based management (only with managed Ethernet extenders)
2 Depends on the operating voltage ≤ 150 mA (Short-circuit-proof) Deactivated for device supply via DIN rail connector
35 mm / 99 mm / 114.5 mm -20°C ... 60°C (Freestanding (40 mm spacing to the right and left), no supply of other modules via the device)
VCC // Ethernet // DSL (A) // DSL (B) // FE 1.5 kV_{rms} (50 Hz, 1 min.) Conformance with EMC Directive 2014/30/EU Class A product, see page 527

Ordering data

Type	Order No.	Pcs./Pkt.
TC EXTENDER 2001 ETH-2S	2702409	1

Accessories

MINI-SYS-PS-100-240AC/24DC/1.5	2866983	1
ME 17,5 TBUS 1,5/ 5-ST-3,81 GN	2709561	10
DT-TELE-SHDSL	2801593	1

Media converters – Universal devices

Optical transmission with FO technology provides superior immunity to interference at maximum transmission ranges without restricting the transmission bandwidth.

General features

– Auto negotiation and auto MDI/MDIx
– Connection monitoring with LFPT (link fault pass through)
– Signal LEDs for activity, link status, 10/100 Mbps
– Backplane bus contact, enabling alternative or redundant 24 V power supply

Devices with 1300 nm wavelength

The **FL MC EF 1300...** media converters support universal use.

Features:

– 1300 nm wavelength
– Multimode or single mode fiberglass cable
– B-FOC (ST®) or SC duplex

Devices with WDM technology

The **FL MC EF WDM...** media converters enable full duplex communication via a single glass fiber thanks to WDM (wavelength division multiplex) technology.

Features:

– 1310 nm and 1550 nm wavelengths for transmitting and receiving
– Multimode or single mode fiberglass cable
– SC simplex connection

Devices with 660 nm wavelength

The **FL MC EF 660 SCRJ** media converter is designed for use in networks covering short distances.

Features:

– 660 nm wavelength
– Polymer and PCF fibers
– SC-RJ connection
– Easy connection of the FO connector
– LED bar graph for signaling the optical receiving capacity

WDM technology
Single-fiber transmission

Ex:

Technical data

Supply		
Supply voltage range		18 V DC ... 30 V DC (screw connection)
Supply voltage range		18 V DC ... 30 V DC (as an alternative or redundant, via backplane bus contact and system power supply)
Nominal current consumption		< 110 mA (24 V DC)
FO interface		
Wavelength		1550 nm (send) / 1310 nm (receive)
Transmission distance incl. 3 dB system reserve		38 km (with F-E 9/125 0.36 dB/km) 34 km (with F-E 9/125 0.4 dB/km) 28 km (with F-E 9/125 0.5 dB/km) 21 km (with F-G 62.5/125 0.7 dB/km F 1000) 5.5 km (with F-G 62.5/125 2.6 dB/km F 600) 21 km (with F-G 50/125 0.7 dB/km F 1200) 9 km (with F-G 50/125 1.6 dB/km F 800)
Signal LEDs		Far end fault (red LED), link status (yellow LED)
Ethernet interface		
Connection method		RJ45 socket, shielded
Transmission speed		10/100 Mbps
Auto negotiation modes		Auto
Transmission distance		100 m (shielded twisted pair)
Link through		Link fault pass through
MDI-/MDI-X switchover		Auto-MDI(X)
Signal LEDs		Activity, link status, 10/100 Mbps
General data		
Dimensions	W / H / D	22.5 mm / 99 mm / 114.5 mm
Ambient temperature (operation)		-40°C ... 65°C
Electrical isolation		VCC // FE // Ethernet
Test voltage		1.5 kV_{rms} (50 Hz, 1 min.)
Conformance/approvals		
ATEX		II 3 G Ex nA IIC T4 Gc X
UL, USA/Canada		cULus listed UL 508 Class I, Zone 2, AEx nA IIC T4 Class I, Zone 2, Ex nA IIC T4 Gc X Class I, Div. 2, Groups A, B, C, D
EMC note		Class A product, see page 527

Ordering data

Description	Type	Order No.	Pcs./Pkt.
FO converter, for converting 10/100Base-TX to a single mode optical fiber, WDM technology			
WDM set with devices A and B, SC simplex connection	**FL MC EF WDM-SET SC**	2902660	1
WDM device A, SC simplex connection	**FL MC EF WDM-A SC**	2902658	1
WDM device B, SC simplex connection	**FL MC EF WDM-B SC**	2902659	1
FO converter, for converting 10/100Base-TX to multimode fiberglass (1300 nm) - Connection: SC duplex - Connection: B-FOC (ST®)			
FO converter, for converting 10/100Base-TX to single mode fiberglass (1300 nm) - Connection: SC duplex			
FO converter, for converting 100Base-T to polymer or PCF fiber (660 nm) - Connection: SC-RJ			

Universal devices with 1300 nm for multimode fiberglass

Ex:

Technical data

	18 V DC ... 30 V DC (screw connection) 18 V DC ... 30 V DC (as an alternative or redundant, via backplane bus contact and system power supply) < 100 mA (24 V DC)
	1300 nm 6.4 km (with F-G 50/125 0.7 dB/km F 1000) 2.8 km (with F-G 50/125 1.6 dB/km F 800) 10 km (with F-G 62.5/125 0.7 dB/km F 1000) 3 km (with F-G 62.5/125 2.6 dB/km F 600)
	Far end fault (red LED), link status (yellow LED)
	RJ45 socket, shielded 10/100 Mbps Auto 100 m (shielded twisted pair) Link fault pass through Auto-MDI(X) Activity, link status, 10/100 Mbps
	22.5 mm / 99 mm / 114.5 mm -40°C ... 65°C VCC // FE // Ethernet 1.5 kV_{rms} (50 Hz, 1 min.)
	II 3 G Ex nA IIC T4 Gc X II (2) D [Ex op is Db] IIIC (PTB 06 ATEX 2042 U) II (2) G [Ex op is Gb] IIC (PTB 06 ATEX 2042 U) cULus listed UL 508 Class I, Zone 2, AEx nA IIC T4 Class I, Zone 2, Ex nA IIC T4 Gc X Class I, Div. 2, Groups A, B, C, D Class A product, see page 527

Ordering data

Type	Order No.	Pcs./Pkt.
FL MC EF 1300 MM SC	2902853	1
FL MC EF 1300 MM ST	2902854	1

Universal device with 1300 nm for single mode fiberglass

Ex:

Technical data

	18 V DC ... 30 V DC (screw connection) 18 V DC ... 30 V DC (as an alternative or redundant, via backplane bus contact and system power supply) < 100 mA (24 V DC)
	1300 nm 36 km (with F-E 9/125 0.36 dB/km) 32 km (with F-E 9/125 0.4 dB/km) 26 km (with F-E 9/125 0.5 dB/km)
	Far end fault (red LED), link status (yellow LED)
	RJ45 socket, shielded 10/100 Mbps Auto 100 m (shielded twisted pair) Link fault pass through Auto-MDI(X) Activity, link status, 10/100 Mbps
	22.5 mm / 99 mm / 114.5 mm -40°C ... 65°C VCC // FE // Ethernet 1.5 kV_{rms} (50 Hz, 1 min.)
	II 3 G Ex nA IIC T4 Gc X cULus listed UL 508 Class I, Zone 2, AEx nA IIC T4 Class I, Zone 2, Ex nA IIC T4 Gc X Class I, Div. 2, Groups A, B, C, D Class A product, see page 527

Ordering data

Type	Order No.	Pcs./Pkt.
FL MC EF 1300 SM SC	2902856	1

Universal device with 660 nm for polymer and PCF fibers

Technical data

	18 V DC ... 32 V DC (via COMBICON plug-in screw terminal block) 18 V DC ... 32 V DC (as an alternative or redundant, via backplane bus contact and system power supply) ≤ 85 mA (24 V DC)
	660 nm 50 m (Polymer fiber with F-P 980/1000 230 dB/km) 100 m (PCF fiber with F-K 200/230 8 dB/km)
	Optical receiver power: Very good (green), good (green), critical (yellow), fault (red)
	RJ45 socket, shielded 100 Mbps - 100 m (shielded twisted pair) Link fault pass through - -
	22.5 mm / 99 mm / 114.5 mm -40°C ... 60°C VCC // Ethernet 1.5 kV_{rms} (50 Hz, 1 min.)
	- - Class A product, see page 527

Ordering data

Type	Order No.	Pcs./Pkt.
FL MC EF 660 SCRJ	2702944	1

Media converters

The class 1000 and 2000 media converters offer a robust design in metal housing. From the basic version to use in energy applications, they meet a wide range of different requirements.

General features

- 1300 nm wavelength
- Connection monitoring with LFPT (link fault pass through)
- Signal LEDs for activity, link status, 10/100 Mbps
- Robust design in metal housing for high EMC requirements

Devices for basic requirements

The **FL MC 1000...** media converters offer an easy and inexpensive entry-level solution for converting to FO technology.

Features:

- Multimode fiberglass cables
- B-FOC (ST®) or SC duplex
- Auto negotiation and auto MDI/MDIx

Devices for real-time applications

Thanks to their short delay times (latency), the **FL MC 2000T...** media converters are suitable for applications with real-time Ethernet protocols.

Features:

- Store-and-forward or pass-through mode can be selected via DIP switch (low latency, 835 ns)
- Multimode or single mode fiberglass cable
- B-FOC (ST®) or SC duplex
- Extended temperature range (-40°C ... +75°C)

Devices for harsh requirements

The **FL MC 2000E...** media converters are designed for use in energy technology. Thanks to their robust design, they are used in environments subject to high levels of EMI around switchgear.

Features:

- Multimode or single mode fiberglass cable
- LC duplex connection
- IEC 61850 and IEEE 1613
- Extended temperature range (-40°C ... +75°C)
- Redundant power supply with a wide range from 12 ... 57 V DC (24, 36, 48 V DC)

Basic requirements, multimode fiberglass

Ex:

Technical data

Supply		
Supply voltage range		12 V DC ... 48 V DC
Nominal current consumption		73 mA (24 V DC)
FO interface		
Wavelength		1310 nm
Transmission distance incl. 3 dB system reserve		8 km (fiberglass with F-G 62.5/125 0.7 dB/km F1000) 3.3 km (fiberglass with F-G 62.5/125 2.6 dB/km F600) 9.6 km (fiberglass with F-G 50/125 0.7 dB/km F1200) 5.3 km (fiberglass with F-G 50/125 1.6 dB/km F800)
Signal LEDs		LNK/ACT
Ethernet interface		
Connection method		RJ45 socket, shielded
Transmission speed		10/100 Mbps
Auto negotiation modes		Auto
Link through		Link fault pass through
MDI-/MDI-X switchover		Auto-MDI(X)
Signal LEDs		LNK/ACT, 100
Switching output		
Contact type		-
Max. switching voltage		-
General data		
Dimensions	W / H / D	28 mm / 110 mm / 70 mm
Ambient temperature (operation)		0°C ... 60°C
Electrical isolation		VCC // FE // Ethernet
Test voltage		1500 V AC (500 V AC, 1 minute)
EMC note		Class A product, see page 527

Ordering data

Description	Type	Order No.	Pcs./Pkt.
FO converter, for converting 10/100Base-TX to multimode fiberglass (1300 nm)			
- Connection: SC duplex	**FL MC 1000 SC**	2891320	1
- Connection: B-FOC (ST®)	**FL MC 1000 ST**	2891321	1
- Connection: LC duplex			
FO converter, for converting 10/100Base-TX to single mode fiberglass (1300 nm)			
- Connection: SC duplex			
- Connection: SC duplex			
- Connection: LC duplex			

Real-time protocols, multimode fiberglass

Ex:

Technical data

12 V DC ... 48 V DC 110 mA (24 V DC)
1310 nm 8 km (fiberglass with F-G 62.5/125 0.7 dB/km F1000) 3.3 km (fiberglass with F-G 62.5/125 2.6 dB/km F600) 9.6 km (fiberglass with F-G 50/125 0.7 dB/km F1200) 5.3 km (fiberglass with F-G 50/125 1.6 dB/km F800)
LNK/ACT
RJ45 socket, shielded 10/100 Mbps Auto Link fault pass through Auto-MDI(X) LNK/ACT, 100
1 x N/C contact ≤ 250 V AC
28 mm / 110 mm / 70 mm -40°C ... 75°C VCC // FE // Ethernet 1500 V AC (500 V AC, 1 minute) Class A product, see page 527

Ordering data

Type	Order No.	Pcs./Pkt.
FL MC 2000T SC	2891315	1
FL MC 2000T ST	2891316	1

Real-time protocols, single mode fiberglass

Ex:

Technical data

FL MC 2000T SM20 SC	FL MC 2000T SM40 SC
12 V DC ... 48 V DC 110 mA (24 V DC)	
1310 nm	
20 km (fiberglass with F-G 9/125 0.36 dB/km)	40 km (fiberglass with F-G 9/125 0.36 dB/km) 36 km (fiberglass with F-G 9/125 0.4 dB/km) 29 km (fiberglass with F-G 9/125 0.5 dB/km)
LNK/ACT	
RJ45 socket, shielded 10/100 Mbps Auto Link fault pass through Auto-MDI(X) LNK/ACT, 100	
1 x N/C contact ≤ 250 V AC	
28 mm / 110 mm / 70 mm -40°C ... 75°C VCC // FE // Ethernet 1500 V AC (500 V AC, 1 minute) Class A product, see page 527	

Ordering data

Type	Order No.	Pcs./Pkt.
FL MC 2000T SM20 SC	2891317	1
FL MC 2000T SM40 SC	2891318	1

IEC 61850-3

Harsh ambient conditions, IEC 61850

Ex:

Technical data

FL MC 2000E LC	FL MC 2000E SM40 LC
12 V DC ... 57 V DC 110 mA (24 V DC)	
1310 nm	
8 km (fiberglass with F-G 62.5/125 0.7 dB/km F1000) 3.3 km (fiberglass with F-G 62.5/125 2.6 dB/km F600) 9.6 km (fiberglass with F-G 50/125 0.7 dB/km F1200) 5.3 km (fiberglass with F-G 50/125 1.6 dB/km F800)	40 km (fiberglass with F-G 9/125 0.36 dB/km) 36 km (fiberglass with F-G 9/125 0.4 dB/km) 29 km (fiberglass with F-G 9/125 0.5 dB/km)
LNK/ACT	
RJ45 socket, shielded 100 Mbps Link fault pass through Auto-MDI(X) LNK/ACT, 100	
1 x N/C contact ≤ 250 V AC	
30 mm / 130 mm / 100 mm -40°C ... 75°C VCC // FE // Ethernet 1500 V AC (500 V AC, 1 minute) Class A product, see page 527	

Ordering data

Type	Order No.	Pcs./Pkt.
FL MC 2000E LC	2891056	1
FL MC 2000E SM40 LC	2891156	1

Device servers and gateways for implementing serial protocols for Ethernet

The new device servers and gateways offer versions with multiple serial ports and Ethernet ports, as well as advanced security functions. That's why they are particularly suitable for sensitive industries such as energy supply, infrastructure or the process industry, where increased requirements are placed on Ethernet security.

Hardware

The serial device servers and gateways are available in different hardware versions:
– 1 x Ethernet and 1 x RS-232/422/485
– 1 x Ethernet and 2 x RS-232/422/485
– 2 x Ethernet and 2 x RS-232/422/485
– 2 x Ethernet and 4 x RS-232/422/485

Functions:

Each hardware design is available in four different versions.

Device servers:
– Protocol-transparent transmission of serial data via Ethernet

Gateways:
– Converting Modbus/RTU to Modbus/TCP
– Converting any serial data (RAW/ASCII) to Modbus/TCP
– Converting any serial data (RAW/ASCII) to EtherNet/IP™
– Converting any serial data (RAW/ASCII) to PROFINET

Features:

– 256-bit AES encryption with additional programmable, password-protected settings
– Easy installation and startup
– Web-based management
– Monitoring and diagnostics of serial ports
– Easy connection to a variety of serial devices with D-SUB connectors from the SUBCON range

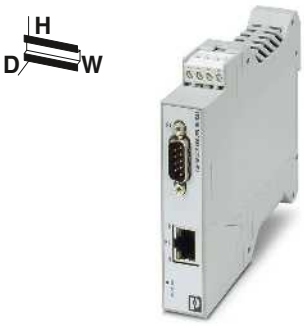

1 x Ethernet and 1 x RS-232/422/485

Ex:

Technical data

Supply		
Supply voltage range		10.8 V DC ... 30 V DC (via COMBICON plug-in screw terminal block)
Nominal current consumption		48 mA (24 V DC)
Serial port		
Interfaces		RS-232, RS-422, RS-485
Connection method		D-SUB 9 plug
Data format/encoding		5/6/7/8 Data bits, 1/2 Stop bits, None/Even/Odd/Mark/Space Parity
Data flow control/protocols		Software handshake, Xon/Xoff or hardware handshake RTS/CTS
Transmission speed		0.3; 0.6; 1.2; 2.4; 4.8; 9.6; 19.2; 38.4; 57.6; 115.2; 230.4 Kbps
Termination resistor		120 Ω
Ethernet interface		
Connection method		RJ45 socket, shielded
Transmission speed		10/100 Mbps, auto negotiation
Transmission distance		≤ 100 m (shielded twisted pair)
Auxiliary protocols		ARP, DHCP (Client), PING
Functions		
Management		Web-based management
General data		
Dimensions	W / H / D	22.5 mm / 99 mm / 115 mm
Ambient temperature (operation)		-40°C ... 70°C
Electrical isolation		IEC UL 61010-1 (VCC // Ethernet)
Test voltage		1.5 kV_{rms} (50 Hz, 1 min.)
Electromagnetic compatibility		Conformance with EMC Directive 2014/30/EU
Conformance/approvals		
UL, USA/Canada		Class I, Div. 2, Groups A, B, C, D T4A
EMC note		Class A product, see page 527

Ordering data

Description	Type	Order No.	Pcs./Pkt.
Serial device servers			
- Device servers for protocol-transparent transmission of serial data via Ethernet	**GW DEVICE SERVER 1E/1DB9**	2702758	1
Modbus gateway			
- Modbus gateways for converting Modbus/TCP to Modbus/RTU	**GW MODBUS TCP/RTU 1E/1DB9**	2702764	1
ASCII converters			
- ASCII to Modbus/TCP	**GW MODBUS TCP/ASCII 1E/1DB9**	2702768	1
- ASCII to EtherNet/IP™	**GW EIP/ASCII 1E/1DB9**	2702772	1
- ASCII to PROFINET	**GW PN/ASCII 1E/1DB9**	1021080	1

Accessories

D-SUB plug, with screw connection			
- 9-pos., socket	**SUBCON 9/F-SH**	2761499	1
D-SUB plug, with **two** cable entries, **universal type**, pin assignment 1,2,3,4,5,6,7,8,9 on **every** screw terminal block			
- Axial, 9-pos., socket	**SUBCON-PLUS-F/AX 9**	2311797	1

1 x Ethernet and 2 x RS-232/422/485

Ex:

Technical data

10.8 V DC ... 30 V DC (via COMBICON plug-in screw terminal block)
76 mA (24 V DC)
RS-232, RS-422, RS-485 D-SUB 9 plug 5/6/7/8 Data bits, 1/2 Stop bits, None/Even/Odd/Mark/Space Parity
Software handshake, Xon/Xoff or hardware handshake RTS/CTS
0.3; 0.6; 1.2; 2.4; 4.8; 9.6; 19.2; 38.4; 57.6; 115.2; 230.4 Kbps
120 Ω
RJ45 socket, shielded 10/100 Mbps, auto negotiation ≤ 100 m (shielded twisted pair) ARP, DHCP (Client), PING
Web-based management
22.5 mm / 99 mm / 115 mm -40°C ... 70°C IEC UL 61010-1 (VCC // Ethernet) 1.5 kV_{rms} (50 Hz, 1 min.) Conformance with EMC Directive 2014/30/EU
Class I, Div. 2, Groups A, B, C, D T4A Class A product, see page 527

Ordering data

Type	Order No.	Pcs./Pkt.
GW DEVICE SERVER 1E/2DB9	2702760	1
GW MODBUS TCP/RTU 1E/2DB9	2702765	1
GW MODBUS TCP/ASCII 1E/2DB9	2702769	1
GW EIP/ASCII 1E/2DB9	2702773	1
GW PN/ASCII 1E/2DB9	1021058	1

Accessories

SUBCON 9/F-SH	2761499	1
SUBCON-PLUS-F/AX 9	2311797	1

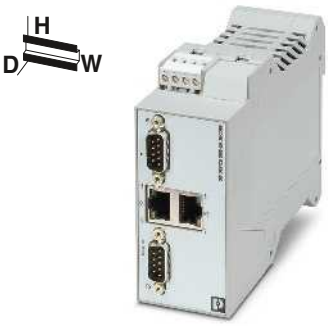

2 x Ethernet and 2 x RS-232/422/485

Ex:

Technical data

10.8 V DC ... 30 V DC (via COMBICON plug-in screw terminal block)
88 mA (24 V DC)
RS-232, RS-422, RS-485 D-SUB 9 plug 5/6/7/8 Data bits, 1/2 Stop bits, None/Even/Odd/Mark/Space Parity
Software handshake, Xon/Xoff or hardware handshake RTS/CTS
0.3; 0.6; 1.2; 2.4; 4.8; 9.6; 19.2; 38.4; 57.6; 115.2; 230.4 Kbps
120 Ω
RJ45 socket, shielded 10/100 Mbps, auto negotiation ≤ 100 m (shielded twisted pair) ARP, DHCP (Client), PING
Web-based management
45 mm / 99 mm / 115 mm -40°C ... 70°C IEC UL 61010-1 (VCC // Ethernet) 1.5 kV_{rms} (50 Hz, 1 min.) Conformance with EMC Directive 2014/30/EU
Class I, Div. 2, Groups A, B, C, D T4A Class A product, see page 527

Ordering data

Type	Order No.	Pcs./Pkt.
GW DEVICE SERVER 2E/2DB9	2702761	1
GW MODBUS TCP/RTU 2E/2DB9	2702766	1
GW MODBUS TCP/ASCII 2E/2DB9	2702770	1
GW EIP/ASCII 2E/2DB9	2702774	1
GW PN/ASCII 2E/2DB9	1021056	1

Accessories

SUBCON 9/F-SH	2761499	1
SUBCON-PLUS-F/AX 9	2311797	1

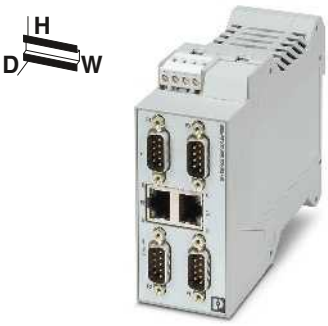

2 x Ethernet and 4 x RS-232/422/485

Ex:

Technical data

10.8 V DC ... 30 V DC (via COMBICON plug-in screw terminal block)
110 mA (24 V DC)
RS-232, RS-422, RS-485 D-SUB 9 plug 5/6/7/8 Data bits, 1/2 Stop bits, None/Even/Odd/Mark/Space Parity
Software handshake, Xon/Xoff or hardware handshake RTS/CTS
0.3; 0.6; 1.2; 2.4; 4.8; 9.6; 19.2; 38.4; 57.6; 115.2; 230.4 Kbps
120 Ω
RJ45 socket, shielded 10/100 Mbps, auto negotiation ≤ 100 m (shielded twisted pair) ARP, DHCP (Client), PING
Web-based management
45 mm / 99 mm / 115 mm -40°C ... 70°C IEC UL 61010-1 (VCC // Ethernet) 1.5 kV_{rms} (50 Hz, 1 min.) Conformance with EMC Directive 2014/30/EU
Class I, Div. 2, Groups A, B, C, D T4A Class A product, see page 527

Ordering data

Type	Order No.	Pcs./Pkt.
GW DEVICE SERVER 2E/4DB9	2702763	1
GW MODBUS TCP/RTU 2E/4DB9	2702767	1
GW MODBUS TCP/ASCII 2E/4DB9	2702771	1
GW EIP/ASCII 2E/4DB9	2702776	1
GW PN/ASCII 2E/4DB9	1020882	1

Accessories

SUBCON 9/F-SH	2761499	1
SUBCON-PLUS-F/AX 9	2311797	1

Device servers for converting serial interfaces

The **FL COMSERVER...232/422/485** products are used to integrate serial RS-232/RS-422/RS-485 interfaces into existing Ethernet networks. This provides an easy way of implementing functions such as cable replacement, network integration or a Modbus gateway.

Cable replacement

Two devices in combination tunnel serial connections via Ethernet, using either the TCP or UDP protocol.

Network integration

You can integrate automation devices such as controllers or frequency inverters into a network using corresponding programming and diagnostics software. COM diversion software creates a virtual COM port on the PC and transmits the data to the FL COMSERVER.

Modbus gateway

The integrated Modbus gateway function provided in FL COMSERVER UNI converts serial Modbus ASCII or RTU data into Modbus/TCP. Naturally, the conversion process also works in the opposite direction.

Features common to all devices:

- Serial interfaces: RS-232, RS-422, RS-485
- 10/100 Base-T(X) interface
- Software for virtual COM ports supplied as standard
- Extended temperature range (-25°C ... +60°C)
- Redundant power supply and modular station configuration with DIN rail connectors
- 3-way electrical isolation VCC // RS-232/RS-422/RS-485 // network
- Integration into network management tools and visualization systems with the support of SNMP services
- LED diagnostic indicators
- Configuration via web-based management

FL COMSERVER UNI...

- Supports TCP, UDP, Modbus TCP/RTU/ASCII
- Can be used exactly as required on Modbus master or slave

FL COMSERVER BASIC...

- Best-value version
- Supports TCP and UDP

Supply	
Supply voltage range	
Supply voltage range	
Nominal current consumption	
Serial port	
Interfaces	
Connection method	RS-232 RS-422 RS-485
Data format/encoding	
Data flow control/protocols	
Transmission speed	
Termination resistor	
Ethernet interface	
Connection method	
Transmission speed	
Transmission distance	
Supported protocols	
Auxiliary protocols	
Functions	
Management	
General data	
Dimensions	W / H / D
Ambient temperature (operation)	
Electrical isolation	
Test voltage	
Electromagnetic compatibility	
Conformance/approvals	
UL, USA/Canada	
EMC note	

Description
FL COMSERVER...232/422/485, for converting serial interfaces to Ethernet. COM port redirector software and additional software supplied as standard
TCP, UDP, Modbus, PPP
TCP, UDP

DIN rail connector
System power supply, primary-switched

Universal device – Modbus gateway between RTU/ASCII and TCP

Ex:

Technical data
19.2 V AC/DC ... 28.8 V AC/DC (via COMBICON plug-in screw terminal block) 22.8 V DC ... 25.2 V DC (as an alternative or redundant, via backplane bus contact and system power supply)
100 mA (24 V DC)
RS-232, RS-422, RS-485 D-SUB 9 plug Plug-in/screw connection via COMBICON Plug-in/screw connection via COMBICON UART/NRZ: 7/8 Bit Data, 1/2 Bit Stop, None/Even/Odd Parity
Software handshake, Xon/Xoff, or hardware handshake RTS/CTS // 3964 R compatible, Modbus RTU/ASCII
0.3; 0.6; 1.2; 2.4; 4.8; 7.2; 9.6; 19.2; 38.4; 57.6; 115.2; 187.5; 230.4 kbps 390 Ω / 180 Ω / 390 Ω (configurable)
RJ45 socket, shielded 10/100 Mbps, auto negotiation ≤ 100 m (shielded twisted pair) TCP/IP, UDP, Modbus (TCP, RTU/ASCII), PPP ARP, DHCP, BOOTP, SNMP, RIP, RARP, HTTP, TFTP, ICMP
Web-based management, SNMP, emergency access with Telnet and serial
22.5 mm / 99 mm / 116 mm -25°C ... 60°C DIN EN 50178 (VCC // Ethernet // Serial) 1.5 kV_{rms} (50 Hz, 1 min.) Conformance with EMC Directive 2014/30/EU
508 Listed Class I, Div. 2, Groups A, B, C, D Class A product, see page 527

Ordering data

Type	Order No.	Pcs./Pkt.
FL COMSERVER UNI 232/422/485	2313452	1

Accessories

ME 22,5 TBUS 1,5/ 5-ST-3,81 GN	2707437	50
MINI-SYS-PS-100-240AC/24DC/1.5	2866983	1

Basic version for redirector operation – TCP and UDP

Ex:

Technical data
19.2 V AC/DC ... 28.8 V AC/DC (via COMBICON plug-in screw terminal block) 22.8 V DC ... 25.2 V DC (as an alternative or redundant, via backplane bus contact and system power supply)
100 mA (24 V DC)
RS-232, RS-422, RS-485 D-SUB 9 plug Plug-in/screw connection via COMBICON Plug-in/screw connection via COMBICON UART/NRZ: 7/8 Bit Data, 1/2 Bit Stop, None/Even/Odd Parity
Software handshake, Xon/Xoff or hardware handshake RTS/CTS
0.3; 0.6; 1.2; 2.4; 4.8; 7.2; 9.6; 19.2; 38.4; 57.6; 115.2; 187.5; 230.4 kbps 390 Ω / 180 Ω / 390 Ω
RJ45 socket, shielded 10/100 Mbps, auto negotiation ≤ 100 m (shielded twisted pair) TCP/IP, UDP ARP, DHCP, BOOTP, SNMP, RIP, RARP, HTTP, TFTP, ICMP
Web-based management, SNMP, emergency access with Telnet and serial
22.5 mm / 99 mm / 116 mm -25°C ... 60°C DIN EN 50178 (VCC // Ethernet // Serial) 1.5 kV_{rms} (50 Hz, 1 min.) Conformance with EMC Directive 2014/30/EU
508 Listed Class I, Div. 2, Groups A, B, C, D Class A product, see page 527

Ordering data

Type	Order No.	Pcs./Pkt.
FL COMSERVER BASIC 232/422/485	2313478	1

Accessories

ME 22,5 TBUS 1,5/ 5-ST-3,81 GN	2707437	50
MINI-SYS-PS-100-240AC/24DC/1.5	2866983	1

PROFINET proxies

Gateways and proxies from Phoenix Contact are the intelligent solution for integrating networks into other networks.

Your advantages:

- 1:1 integration of networks or segments, thanks to proxy technology
- Easy system modernization with transparent communication over multiple bus systems
- Versatile diagnostics: thanks to topology detection and manufacturer-independent diagnostic concepts
- Fast device replacement with optional CF card as parameterization memory

Proxy for INTERBUS

Use your INTERBUS application easily in a PROFINET network: with the **FL NP PND-4TX IB**. Simply parameterize the device using your respective programming tool. Use the integrated switch in the control cabinet as an uplink to the control system or in the field for series connection.

Proxy for PROFIBUS

Integrate controllers, I/O stations, and other automation devices seamlessly into a PROFIBUS network. With the **FL NP PND-4TX PB**, you can configure and diagnose each PROFIBUS device directly, thanks to seamless integration. I/O signals of PROFIBUS devices are linked directly to program variables from the application. The PROFIBUS proxy is operated exclusively using PC Worx.

Additional features:

- Data exchange, diagnostics, and parameterization are via the PROFINET protocol
- Can be integrated and parameterized in any controller using the PROFINET functionality
- LLDP support for topology detection
- PROFINET update rates ≥ 1 ms

PROFINET INTERBUS proxy

Technical data

PROFINET		
Specification		PROFINET-IO RT, Spec. 2.2
Conformance class		B
Update rate		min. 1 ms
Software		
		Diagnostics software: DIAG+, version 2.0 or higher Configuration software: using the GSDML file or PC WORX version 5.0 or higher
Ethernet		
Connection method		RJ45 socket
Transmission speed		10/100 Mbps
INTERBUS		
Interface		INTERBUS (Master)
Connection method		9-pos. D-SUB socket
Number		1
Number of I/O nodes		8192
Number of devices with parameter channel		max. 126 (512 words)
Transmission speed		500 kbps / 2 Mbps (can be switched)
PROFIBUS		
Interface		-
Connection method		-
Number		-
Transmission speed		-
Number of supported devices		
Number of supported devices		max. 512 (depending on the control class and data direction)
Power supply		
Supply voltage		24 V DC
Supply voltage range		18.5 V DC ... 30.2 V DC
Typical current consumption		typ. 350 mA
General data		
Dimensions	W / H / D	128 mm / 95 mm / 69 mm
Ambient temperature (operation)		-25°C ... 60°C
Ambient temperature (storage/transport)		-25°C ... 70°C

Ordering data

Description	Type	Order No.	Pcs./Pkt.
Proxy for PROFINET - INTERBUS - INTERBUS FO - PROFIBUS	**FL NP PND-4TX IB**	2985974	1

Accessories

Parameterization memory	**CF FLASH 256MB**	2988780	1

PROFINET INTERBUS fiber optic proxy

PROFINET PROFIBUS proxy for PC Worx control systems

Technical data	Technical data
PROFINET-IO RT, Spec. 2.2 B min. 1 ms	PROFINET-IO RT, Spec. 2.1 B min. 1 ms
Diagnostics software: DIAG+, version 2.0 or higher Configuration software: using the GSDML file or PC WORX version 5.0 or higher	Diagnostics software: DIAG+, version 2.0 or higher Configuration software PC WORX starting from Version 5.20, Service Pack 3
RJ45 socket 10/100 Mbps	RJ45 socket 10/100 Mbps
INTERBUS (Master) F-SMA connector 1 8192 max. 126 (512 words) 500 kbps / 2 Mbps (can be switched)	- - - - - -
- - - -	PROFIBUS DP V0/V1 class 2 master 9-pos. D-SUB socket 1 up to 12 Mbps
max. 512 (depending on the control class and data direction)	max. 125
24 V DC 18.5 V DC ... 30.2 V DC typ. 350 mA	24 V DC 18.5 V DC ... 30.2 V DC 350 mA
128 mm / 95 mm / 69 mm -25°C ... 60°C -25°C ... 70°C	128 mm / 95 mm / 69 mm -25°C ... 55°C -25°C ... 70°C

Ordering data

Type	Order No.	Pcs./Pkt.
FL NP PND-4TX IB-LK	2985929	1

Accessories

CF FLASH 256MB	2988780	1

Ordering data

Type	Order No.	Pcs./Pkt.
FL NP PND-4TX PB	2985071	1

Accessories

CF FLASH 256MB	2988780	1

Patch panels

Ethernet patch panels enable quick and easy connection between the field cabling and control cabinet cabling. The passive termination panels are a convenient alternative to the on-site assembly of RJ45 connectors.

General features

- CAT5e
- 10/100/1000 Mbps
- Mounting on DIN rails
- Safe shield connection to ground potential
- Versions with IDC, Push-in, screw or RJ connection
- Quick and easy mounting
- Wiring space covered with front panel cover
- Tool-free shield contacting with strain relief

PP-RJ-...-F for high system availability

- Integrated surge protection in accordance with IEC 61643-21 with IEC test classification C2 for all eight cable wires
- When installed in PoE connections: shield current monitoring with visual display of undesirable cable shield currents

RJ45 to RJ45

Ex:

Technical data

		PP-RJ-RJ	PP-RJ-RJ-F
Supply			
Supply voltage range		-	36 V DC ... 52 V DC ±10% (via PoE (for shield current monitoring)) 42 V DC ... 57 V DC (with UL approval)
Shield current monitoring			
Switch-on threshold		-	≥ 30 mA
Local diagnostics		-	Yellow LED
General data			
Transmission speed		10/100/1000 Mbps	
Connecting cable		twisted pair, shielded, CAT5 or better	
Transmission distance		100 m (including patch cables)	
Plug connection		RJ45 CAT5e	
Current carrying capacity		-	≤ 1.5 A (≤ 60 W (PoE+))
External cable diameter			
Connection cross section rigid / flexible / AWG		-	
Strain relief		-	
Dimensions	W / H / D	23.8 mm / 101.3 mm / 50 mm	23.8 mm / 101.3 mm / 86 mm
Degree of protection		IP20	
Ambient temperature (operation)		-40°C ... 75°C	
Electrical isolation		-	FE // Ethernet

Ordering data

Description	Type	Order No.	Pcs./Pkt.
Patch panel			
	PP-RJ-RJ	2703015	1
Patch panel, with shield current monitoring and surge protection			
	PP-RJ-RJ-F	2703020	1

RJ45 to screw connection

Ex:

Technical data	
PP-RJ-SC	PP-RJ-SC-F
-	36 V DC ... 52 V DC ±10% (via PoE) 42 V DC ... 57 V DC (with UL approval)
-	≥ 30 mA
-	Yellow LED
10/100/1000 Mbps twisted pair, shielded, CAT5 or better 100 m (including patch cables) RJ45 CAT5e	
-	≤ 1.5 A (≤ 60 W (PoE+))
5.5 mm ... 6.5 mm	
0.14 - 1.5 mm² / 0.14 - 1.5 mm² / 28 - 16	
Tool-free	
23.8 mm / 101.3 mm / 50 mm	23.8 mm / 101.3 mm / 86 mm
IP20	
-40°C ... 75°C	
-	FE // Ethernet

Ordering data		
Type	**Order No.**	Pcs./Pkt.
PP-RJ-SC	2703016	1
PP-RJ-SC-F	2703021	1

RJ45 to Push-in connection

Ex:

Technical data	
PP-RJ-SCC	PP-RJ-SCC-F
-	36 V DC ... 52 V DC ±10% (via PoE) 42 V DC ... 57 V DC (with UL approval)
-	≥ 30 mA
-	Yellow LED
10/100/1000 Mbps twisted pair, shielded, CAT5 or better 100 m (including patch cables) RJ45 CAT5e	
-	≤ 1.5 A (≤ 60 W (PoE+))
5.5 mm ... 6.5 mm	
0.2 - 1.5 mm² / 0.2 - 1.5 mm² / 26 - 16	
Tool-free	
23.8 mm / 101.3 mm / 50 mm	23.8 mm / 101.3 mm / 86 mm
IP20	
-40°C ... 75°C	
-	FE // Ethernet

Ordering data		
Type	**Order No.**	Pcs./Pkt.
PP-RJ-SCC	2703018	1
PP-RJ-SCC-F	2703022	1

RJ45 to IDC connection

Ex:

Technical data	
PP-RJ-IDC	PP-RJ-IDC-F
-	36 V DC ... 52 V DC ±10% (via PoE) 42 V DC ... 57 V DC (with UL approval)
-	≥ 30 mA
-	Yellow LED
10/100/1000 Mbps twisted pair, shielded, CAT5 or better 100 m (including patch cables) RJ45 CAT5e	
-	≤ 1.5 A (≤ 60 W (PoE+))
5.5 mm ... 6.5 mm	
0.14 - 0.34 mm² / 0.14 - 0.34 mm² / 26 - 22	
Tool-free	
23.8 mm / 101.3 mm / 50 mm	23.8 mm / 101.3 mm / 86 mm
IP20	
-40°C ... 75°C	
-	FE // Ethernet

Ordering data		
Type	**Order No.**	Pcs./Pkt.
PP-RJ-IDC	2703019	1
PP-RJ-IDC-F	2703023	1

Patch panels

Ethernet patch panels enable quick and easy connection between the field cabling and control cabinet cabling. The passive termination panels are a convenient alternative to the on-site assembly of RJ45 connectors.

General features
- CAT5e
- 10/100/1000 Mbps
- Mounting on DIN rails
- Safe shield connection to ground potential

FL CAT 5 TERMINAL BOX
- Screw terminal blocks
- 4-pin assignment: 1, 2, 3, 6
- Clear marking by means of PROFINET cable colors

FL-PP-RJ45-...
- Spring connection terminal blocks
- Screw terminal blocks
- LSA connection terminal blocks
- 8-pin assignment: 1:1
- Option of shield contacting on DIN rail directly or via RC element with jumper

FL-PP-RJ45/RJ45
- Two RJ45 sockets
- 8-pin assignment: 1:1
- Version B as basic version with compact design and extended temperature range

FL-PP-RJ45-SCC/...
- Y-splitter for transmission of two individual network connections with 10/100 Mbps or phone line via a CAT cable with eight wires
- Spring connection terminal blocks
- Option of shield contacting on DIN rail directly or via RC element with jumper

1 x RJ45 to four connection terminal blocks, up to 100 Mbps

Technical data

General data		
Cable impedance		100 Ω
Transmission speed		10/100 Mbps
Connecting cable		twisted pair, shielded, CAT5 or better
Transmission distance		100 m (including patch cables)
Plug connection		RJ45 CAT5e
Insertion/withdrawal cycles		≤ 2500
External cable diameter		6 mm ... 10 mm
Connection cross section rigid / flexible / AWG		0.14 - 1.5 mm² / 0.14 - 1 mm² / 26 - 16
Dimensions	W / H / D	25 mm / 90 mm / 52 mm
Ambient temperature (operation)		-25°C ... 70°C

Ordering data

Description	Type	Order No.	Pcs./Pkt.
Patch panel, one **RJ45 socket to 4 screw connection terminal blocks** (assignment 1, 2, 3, 6), CAT5, 10/100 Mbps, DIN rail mounting, IP20, shield contacting on DIN rail	**FL CAT5 TERMINAL BOX**	2744610	10
Patch panel, one **RJ45 socket to 8 connection terminal blocks** (1:1 assignment), CAT5e, 10/100/1000 Mbps, DIN rail mounting, IP20, option of shield contacting on DIN rail via jumpers - RJ45 to spring connection terminal blocks - RJ45 to screw connection terminal blocks - RJ45 to LSA connection terminal blocks (without ATEX approval)			
Patch panel, two RJ45 sockets (1:1 assignment), CAT5, 10/100/1000 Mbps, DIN rail mounting, IP20, option of shield contacting on DIN rail via jumpers			
Patch panel, two RJ45 sockets (1:1 assignment), **extended temperature range,** CAT5, 10/100 Mbps, DIN rail mounting, IP20, consistent shield, width 22.5 mm - without ATEX approval			
Cable sharing module, two RJ45 sockets with Ethernet assignment to 8 spring-cage connection terminal blocks, CAT5e, 10/100 Mbps, DIN rail mounting, IP20, option of shield contacting on DIN rail via jumpers - Cable outlet at the front, width 52 mm - Cable outlet at the top, width 56 mm			

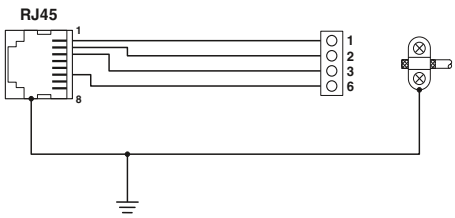

1 x RJ45 to eight connection terminal blocks, up to 1000 Mbps

Ex:

Technical data

100 Ω
10/100/1000 Mbps
twisted pair, shielded, CAT5 or better
100 m (including patch cables)
RJ45 CAT5e
≤ 2500
6 mm ... 10 mm
0.2 - 1.5 mm² / 0.2 - 1 mm² / 24 - 16
29 mm / 90 mm / 53 mm
-25°C ... 70°C

Ordering data

Type	Order No.	Pcs./Pkt.
FL-PP-RJ45-SCC	2901642	10
FL-PP-RJ45-SC	2901643	10
FL-PP-RJ45-LSA	2901645	10

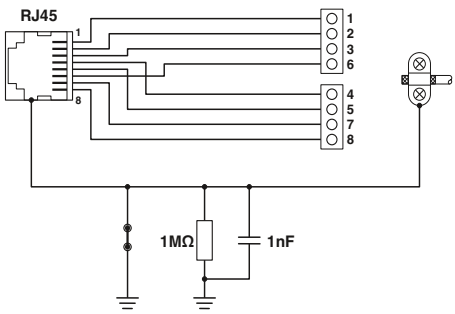

2x RJ45

Ex:

Technical data

	FL-PP-RJ45/RJ45	FL-PP-RJ45/RJ45-B
	100 Ω	
	10/100/1000 Mbps	10/100 Mbps
	twisted pair, shielded, CAT5 or better	
	100 m (including patch cables)	
	RJ45 CAT5e	RJ45 CAT5
	≤ 2500	
	6 mm ... 10 mm	
	0.2 - 1.5 mm² / 0.2 - 1 mm² / 24 - 16	
	-	
	29 mm / 90 mm / 53 mm	22.5 mm / 78 mm / 44 mm
	-25°C ... 70°C	-40°C ... 85°C

Ordering data

Type	Order No.	Pcs./Pkt.
FL-PP-RJ45/RJ45	2901646	10
FL-PP-RJ45/RJ45-B	2904933	10

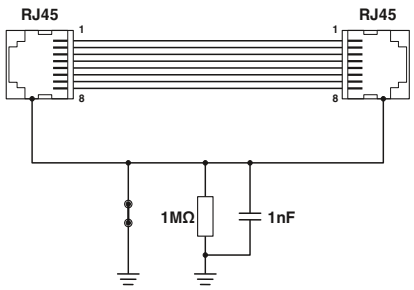

2 x RJ45 to eight connection terminal blocks, Y-splitter

Technical data

	FL-PP-RJ45-SCC/SC041	FL-PP-RJ45-SCC/SC045
	100 Ω	
	10/100 Mbps	
	twisted pair, shielded, CAT5 or better	
	100 m (including patch cables)	
	RJ45 CAT5e	
	≤ 750	≤ 200
	6 mm ... 10 mm	
	0.2 - 1.5 mm² / 0.2 - 1 mm² / 24 - 16	
	52 mm / 90 mm / 51 mm	56 mm / 90 mm / 51 mm
	-10°C ... 50°C	

Ordering data

Type	Order No.	Pcs./Pkt.
FL-PP-RJ45-SCC/SC041	2903532	1
FL-PP-RJ45-SCC/SC045	2904577	1

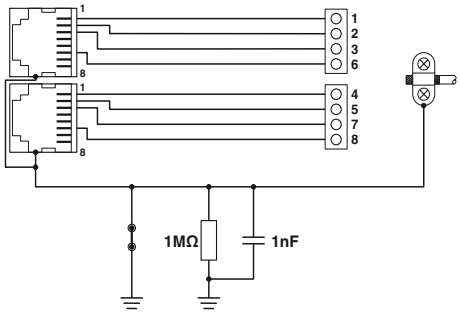

4 kV Ethernet ISOLATOR for electrical isolation

The **FL ISOLATOR** is used for electrical isolation in copper-based Ethernet networks.

In industrial environments, potential differences pose a constant problem with regard to interference-free data transmission.

The high-quality isolation for up to 4 kV provides reliable protection for Ethernet devices and interfaces. This results in considerably higher immunity to interference in industrial applications.

The **FL ISOLATOR 100-M12** has been specifically developed for use in the railway industry. Featuring M12 connection technology and optional wall mounting, this network isolator can be used flexibly.

Features:

- Electrical isolation of data cables and cable shielding
- Dielectric strength up to 4 kV
- Transmission speed of up to 1000 Mbps, device-specific
- No power supply required
- Protection against aggressive environmental influences, particularly harsh industrial environments, thanks to coated PCB
- Approval for railway applications (rolling stock) in accordance with EN 50155 and EN 50121
- Extended temperature range

Transmission speeds up to 1 Gbps, two RJ45 connections

Technical data

Ethernet interface		
Connection method		RJ45 socket, shielded
Transmission speed		10/100/1000 Mbps
Transmission distance		≤ 100 m (total length across both ports (dependent on data rate and cable used))
General data		
Dimensions	W / H / D	22.5 mm / 99 mm / 92 mm
Ambient temperature (operation)		-25°C ... 75°C
Electrical isolation		Ethernet // Ethernet
Test voltage		4 kV AC (50 Hz, 1 min.)
Electromagnetic compatibility		Conformance with EMC Directive 2014/30/EU
Standards/regulations		EN 50121 and EN 50155 (for railway applications)
Conformance/approvals		
UL, USA/Canada		508 Listed
EMC note		

Ordering data

Description	Type	Order No.	Pcs./Pkt.
Passive network isolator, for electrical isolation in Ethernet networks. For protection against potential differences of up to 4 kV. - For transmission speeds of up to 1 Gbps, connection: 2x RJ45 sockets - For transmission speeds of up to 100 Mbps, connection: 2x RJ45 sockets - For transmission speeds of up to 100 Mbps, connection: 1x RJ45 socket and COMBICON plug-in screw terminal block	**FL ISOLATOR 1000-RJ/RJ**	2313915	1
Passive network isolator, for electrical isolation in Ethernet networks. For protection against potential differences of up to 4 kV. - For transmission speeds of up to 100 Mbps, connection: two M12 sockets (D-coded)			

Transmission speeds up to 100 Mbps
Two RJ45 connections

Technical data

RJ45 socket, shielded 10/100 Mbps ≤ 100 m (total length across both ports (dependent on data rate and cable used))
22.5 mm / 99 mm / 92 mm -25°C ... 75°C
Ethernet // Ethernet 4 kV AC (50 Hz, 1 min.) Conformance with EMC Directive 2014/30/EU EN 50121 and EN 50155 (for railway applications)
508 Listed

Ordering data

Type	Order No.	Pcs./Pkt.
FL ISOLATOR 100-RJ/RJ	2313931	1

Transmission speeds up to 100 Mbps
RJ45 and screw connection

Technical data

RJ45 socket, shielded 10/100 Mbps ≤ 100 m (total length across both ports (dependent on data rate and cable used))
22.5 mm / 99 mm / 92 mm -25°C ... 75°C
Ethernet // Ethernet 4 kV AC (50 Hz, 1 min.) Conformance with EMC Directive 2014/30/EU EN 50121 and EN 50155 (for railway applications)
508 Listed

Ordering data

Type	Order No.	Pcs./Pkt.
FL ISOLATOR 100-RJ/SC	2313928	1

Transmission speeds up to 100 Mbps
M12 connection

Technical data

M12 connector (D-coded, female) 10/100 Mbps ≤ 100 m (total length across both ports (dependent on data rate and cable used))
66 mm / 91 mm / 34 mm -40°C ... 75°C (85°C for 10 min.; thereafter function can no longer be guaranteed – check device)
Port X1//port X2 4 kV AC (50 Hz, 1 min.) Conformance with EMC Directive 2014/30/EU EN 50121 and EN 50155 (for railway applications), IEC 60571, DIN EN 50153
- Class A product, see page 527

Ordering data

Type	Order No.	Pcs./Pkt.
FL ISOLATOR 100-M12	2902985	1

Accessories

The reliability of networks is becoming more and more important and is a decisive factor for the future of entire companies. Independent studies show that more than 70% of network errors and crashes are due to faulty cabling infrastructure and manipulation of the connecting cables.

With the new accessories for Factoryline patch cables, the various safety requirements for automation are comprehensively met.

Dust protection for SFN switches and FL MC 1000 and 2000 media converters

Security lock for SFN switches and FL MC 1000 and 2000 media converters

	Ordering data			Ordering data		
Description	Type	Order No.	Pcs./Pkt.	Type	Order No.	Pcs./Pkt.
Dust protection with color marking, for SFN switch and angled patch connector						
- Black	FL DUST CVR BK	2891107	10			
- Blue	FL DUST CVR BU	2891204	10			
- Brown	FL DUST CVR BN	2891301	10			
- Yellow	FL DUST CVR YE	2891408	10			
- Gray	FL DUST CVR GY	2891505	10			
- Green	FL DUST CVR GN	2891602	10			
- Red	FL DUST CVR RD	2891709	10			
- Violet	FL DUST CVR VT	2891806	10			
- White	FL DUST CVR WH	2891903	10			
Security frame for SFN switch and patch fields						
- Green				FL PLUG GUARD GN	2891615	20
- Red				FL PLUG GUARD RD	2891712	20
- White				FL PLUG GUARD WH	2891819	20
Locking element for security frame FL PLUG GUARD...						
- Locking element				FL PORT GUARD	2891220	20
- Key				FL PLUG GUARD KEY	2891327	1
Color marking for FL CAT... patch...						
- Black						
- Blue						
- Brown						
- Yellow						
- Gray						
- Green						
- Red						
- Violet						
Security element for FL CAT... patch...						
- Security element						
- Security element, lockable						
- Key						
Dust protection cap for RJ45 socket						
- Black						

Color coding for RJ45 FL patch cables

Security element for RJ45 FL patch cables

Dust protection for RJ45 sockets

Ordering data

Type	Order No.	Pcs./Pkt.
FL PATCH CCODE BK	2891194	20
FL PATCH CCODE BU	2891291	20
FL PATCH CCODE BN	2891495	20
FL PATCH CCODE YE	2891592	20
FL PATCH CCODE GY	2891699	20
FL PATCH CCODE GN	2891796	20
FL PATCH CCODE RD	2891893	20
FL PATCH CCODE VT	2891990	20

Ordering data

Type	Order No.	Pcs./Pkt.
FL PATCH SAFE CLIP	2891246	20
FL PATCH GUARD	2891424	20
FL PATCH GUARD KEY	2891521	1

Ordering data

Type	Order No.	Pcs./Pkt.
FL RJ45 PROTECT CAP	2832991	10

WLAN 5100
MODE
PHOENIX CONTACT

Industrial communication technology – Industrial Wireless

Signals that could previously only be acquired with a great deal of effort, or not at all, can now be acquired and transmitted quickly and efficiently using wireless systems.

Wireless LAN

WLAN is a wireless standard in accordance with IEEE 802.11 a/b/g/n for creating wireless networks.

– High data rates of up to 300 Mbps
– Fast roaming
– Device mobility in wide area networks
– High degree of reliability, thanks to MIMO (multiple input, multiple output) technology

Trusted Wireless

Trusted Wireless is a form of wireless technology that has been designed specifically for industrial applications.

– Long range from a few hundred meters to several kilometers
– Robust and reliable communication in industrial environments
– License-free ISM band
– High local system density of several hundred networks possible
– Can be operated in parallel with WLAN 802.11 and Bluetooth systems without interference
– FHSS method for high immunity to interference

WirelessHART

WirelessHART is a transmission technology intended for process automation.

– Wireless module in accordance with IEEE 802.15.4
– Time-synchronized communication
– Supports fully meshed networks
– Secure data transfer

Bluetooth

With Bluetooth, you can configure local wireless networks with up to seven devices.

– Range of up to 100 m in industrial halls and up to 200 m outdoors
– Cyclic and fast data transmission of small data packets
– High local system density, i.e., WLAN 802.11 systems can be operated in parallel without interference
– High data security, thanks to 128-bit data encryption
– FHSS method for high immunity to interference

Product overview	**370**
Wireless Ethernet	
WLAN access points	**372**
Industrial WLAN – WLAN Ethernet adapter	**374**
Wireless I/O / Wireless Serial	
Radioline wireless system	
– Wireless transceivers (2.4 GHz, 900 MHz, 868 MHz)	**376**
– Multipoint multiplexer	**379**
Wireless I/O	
I/O extension modules	**380**
WirelessHART gateway and adapter (2.4 GHz)	**384**
Wireless multiplexer with antennas (2.4 GHz)	**386**
Trusted Wireless Ethernet	
RAD-Line wireless transceiver (900 MHz)	**387**
Antennas and cables	**388**
Remote communication	**402**

Product overview

Wireless Ethernet

Industrial WLAN – 5110 series
WLAN access points
Page 372

Industrial WLAN – 1100 and 2100 series
WLAN access points
Page 373

Industrial WLAN –
WLAN Ethernet adapter
Page 374

Wireless I/O / Wireless Serial

2.4 GHz – Wireless transceiver for
serial interfaces
Page 376

868 MHz – Wireless transceiver for
serial interfaces
Page 377

900 MHz – Wireless transceiver for
serial interfaces
Page 377

900 MHz – Wireless transceiver for
outdoor installation (NEMA 4X)
Page 377

Multipoint multiplexer for RS-485 bus system
Page 379

Fieldbus communication

PROFIBUS PA I/O multiplexer
Page 461

Wireless I/O

Analog/digital I/O module,
2 digital I/Os and 1 analog I/O
Page 380

Digital I/O modules,
4 inputs or 4 relay outputs,
8 inputs or 8 transistor outputs
Page 380

Analog I/O modules,
4 inputs or 4 outputs
Page 382

Temperature I/O module,
4 Pt 100 inputs
Page 383

Trusted Wireless Ethernet

900 MHz – Wireless transceiver with Trusted Wireless, for Ethernet
Page 387

Wireless I/O

Wireless multiplexer with antennas
Page 386

WirelessHART

WirelessHART gateway
Page 384

WirelessHART adapter
Page 385

Wired HART

Ethernet HART multiplexer
Page 463

Remote communication

Alerts – Remote signaling and remote control system
Page 402

Remote maintenance – mGuard security router
Page 404

Remote control – Mobile router
Page 412

Antennas and cables

Antennas
Page 388

Adapters, extension cables
Page 396

5110 series WLAN access points

The latest generation of WLAN modules offers maximum reliability, data throughput, and range.

Features:

- The **FL WLAN 5110** brings WLAN 802.11n to industrial applications and with it a data rate of up to 300 Mbps
- Central cluster management enables the entire wireless network to be set up in just minutes
- MIMO technology with two antennas for wireless communication that is more robust, faster, and covers a wider range
- Optimized for fast roaming under industrial conditions

WLAN

WLAN access point / client
2.4 GHz / 5 GHz

Technical data

Wireless interface		
Wireless standard		IEEE 802.11 / a / b / g / n
Frequency band		2.4 GHz / 5 GHz
Transmission power		max. 20 dBm
Antenna connection method		RSMA (female)
Number		2
Antenna		
Assembly instructions		Antennas not included in scope of supply
Ethernet ports		
Number		2
Connection method		RJ45
Power supply for module electronics		
Supply voltage		24 V DC
Connection method		Via COMBICON
Supply voltage range		10 V DC ... 36 V DC
Supply current		200 mA (at 24 V DC)
Security		
		802.11i WPA PSK (preshared key) WPA2 AES TKIP Supports 802.1X/RADIUS MAC filter
Function		
Operating modes		Access Point / Client Adapter / Repeater
Basic functions		SNMP (V2/V3), CLI, WPS, DHCP, DCP, BootP, HTTP, HTTPS, Syslog, SD card, dual FW image, 1 x DI, 1 x DO, 2 x Ethernet 10/100 Mbit, auto crossover, auto negotiation, MODE button
Configuration		Cluster management, web-based management, WPS
General data		
Wireless licenses		EU, more countries in e-shop
Dimensions	W / H / D	40 mm / 109 mm / 109 mm
Degree of protection		IP20
Ambient temperature (operation)		-25°C ... 60°C (extended temperature range on request)
Permissible humidity (operation)		10% ... 95% (non-condensing)
Air pressure (operation)		800 hPa ... 1080 hPa (up to 2000 m above sea level)
Shock in acc. with EN 60068-2-27/IEC 60068-2-27		30g, 11 ms half-sine shock pulse
Vibration resistance in acc. with EN 60068-2-6/IEC 60068-2-6		5g, 10 ... 150 Hz

Ordering data

Description	Type	Order No.	Pcs./Pkt.
Wireless LAN access point			
- WLAN 802.11 a,b,g,n, frequency 2.4 GHz, 5 GHz, IP20	**FL WLAN 5110**	1043193	1
- Approval for the USA and Canada	**FL WLAN 5111**	1043201	1

Accessories

Parameterization memory, Flash card without license	**SD FLASH 2GB**	2988162	1
Control cabinet set, IP66, including DIN rail, plugs, and screw connections	**FL RUGGED BOX**	2701204	1
- With 3 omnidirectional antennas and antenna cables	**FL RUGGED BOX OMNI-1**	2701430	1
- With 3 omnidirectional antennas, antenna cables, and 100 ... 240 V AC power supply	**FL RUGGED BOX OMNI-2**	2701439	1
- With one panel antenna, antenna cable, and 100 ... 240 V AC power supply	**FL RUGGED BOX DIR-1**	2701440	1

1100 and 2100 series WLAN access points

The **FL WLAN 1100** and **2100** make it easy to install a fast and stable WLAN network on machinery. The powerful integrated antennas enable space-saving and robust installation combined with low solution costs.

Features:
- Fast and easy connection, thanks to single-hole mounting
- Extremely robust housing, shockproof in accordance with IK08
- Optimized for fast roaming under industrial conditions

WLAN

WLAN access point / client – 2.4 GHz / 5 GHz, internal MIMO antennas, IP54 protection

EAC

WLAN

WLAN access point / client – 2.4 GHz / 5 GHz, internal MIMO antennas, IP65 / IP66 / IP67 / IP68 protection

EAC

	Technical data	Technical data
Wireless interface		
Wireless standard	IEEE 802.11 / a / b / g / n	IEEE 802.11 / a / b / g / n
Frequency band	2.4 GHz / 5 GHz	2.4 GHz / 5 GHz
Transmission power	max. 20 dBm (EIRP)	max. 20 dBm (EIRP)
Antenna connection method	(Internal)	(Internal)
Ethernet ports		
Number	1	1
Connection method	RJ45	RJ45
Power supply for module electronics		
Supply voltage	24 V DC (SELV)	24 V DC (SELV)
Connection method	Push-in spring connection	Push-in spring connection
Supply voltage range	18 V DC ... 32 V DC (PELV/SELV)	18 V DC ... 32 V DC (PELV/SELV)
Supply current	typ. 120 mA (at 24 V DC)	typ. 120 mA (at 24 V DC)
Security		
	802.11i WPA PSK (preshared key) WPA2 AES TKIP MAC filter	802.11i WPA PSK (preshared key) WPA2 AES TKIP MAC filter
Function		
Operating modes	Access Point / Client Adapter / Repeater	Access Point / Client Adapter / Repeater
Configuration	Web-based management, automated CLI	Web-based management, automated CLI
General data		
Wireless licenses	EU, more countries in e-shop	EU, more countries in e-shop
Dimensions W / H / D	62.8 mm / 36.5 mm / 113.2 mm	62.8 mm / 36.5 mm / 113.2 mm
Degree of protection	IP54	IP65 / IP66 / IP67 / IP68
Ambient temperature (operation)	0°C ... 60°C	-40°C ... 60°C
Permissible humidity (operation)	5% ... 95% (non-condensing)	5% ... 95% (non-condensing)
Air pressure (operation)	800 hPa ... 1080 hPa (up to 2000 m above sea level)	800 hPa ... 1080 hPa (up to 2000 m above sea level)
Shock in acc. with EN 60068-2-27/IEC 60068-2-27	30g, 11 ms half-sine shock pulse	30g, 11 ms half-sine shock pulse
Vibration resistance in acc. with EN 60068-2-6/IEC 60068-2-6	5g, 10 ... 150 Hz	5g, 10 ... 150 Hz

	Ordering data			Ordering data		
Description	Type	Order No.	Pcs./Pkt.	Type	Order No.	Pcs./Pkt.
Wireless LAN access point						
- WLAN 802.11 a,b,g,n, frequency 2.4 GHz, 5 GHz, IK08	**FL WLAN 1100**	2702534	1	**FL WLAN 2100**	2702535	1
- Approval for the USA and Canada	**FL WLAN 1101**	2702538	1	**FL WLAN 2101**	2702540	1
	Accessories			**Accessories**		
Mechanical adapter, for protecting the rear connector when not mounted directly on control cabinets, etc.	**FL M32 ADAPTER**	2702544	1			

Industrial WLAN – WLAN Ethernet adapter

The **FL EPA 2** modules wirelessly connect Ethernet-capable automation devices to the control network.

Features:

- Robust housing with M12 connections in IP65
- WLAN and Bluetooth in a single device as an option
- Particularly robust with integrated antenna or flexible use with external antenna connection

With external antenna connection, including antenna

Technical data

Wireless interface		
Wireless standard		Bluetooth 2.1 + EDR / IEEE 802.11 / b / g / a
Frequency band		2.4 GHz / 5 GHz
Transmission power		max. 16 dBm (Bluetooth: 10 dBm)
Antenna connection method		RSMA (female)
Antenna		
Connection method		RSMA (male)
Assembly instructions		External OMNI omnidirectional antenna supplied as standard, antennas can be exchanged
Ethernet ports		
Connection method		M12 connector (D-coded, female)
Power supply for module electronics		
Supply voltage		24 V DC
Connection method		M12 connector (A-coded, male)
Supply voltage range		9 V DC ... 30 V DC
Supply current		typ. 54 mA (at 24 V DC)
Security		
		802.11i WPA PSK (preshared key) WPA2 AES TKIP PIN Non-discoverable
Function		
Operating modes		Access point/client adapter for WLAN and Bluetooth
Configuration		Web interface, MODE button, AT commands (TCP/IP), SSC
General data		
Wireless licenses		Europe, USA, Canada, additional countries in the e-shop
Dimensions	W / H / D	67.8 mm / 92.7 mm / 33.2 mm
Degree of protection		IP65
Ambient temperature (operation)		-40°C ... 65°C
Permissible humidity (operation)		5% ... 93% (non-condensing)
Mounting type		Wall mounting

Ordering data

Description	Type	Order No.	Pcs./Pkt.
Combined Ethernet wireless module, with Bluetooth and WLAN - External RSMA antenna connection (female) - Internal 2.4 GHz/5 GHz directional antenna	**FL EPA 2 RSMA**	1005957	1
Bluetooth/Ethernet wireless module			

Accessories

Mounting material, for wall or mast mounting	**FL EPA WMS**	2701134	1
Mounting material, for DIN rail mounting	**FL EPA RMS**	2701133	1

With internal panel antenna

With internal panel antenna

Technical data

Bluetooth 2.1 + EDR / IEEE 802.11 / b / g / a 2.4 GHz / 5 GHz max. 16 dBm (Bluetooth: 10 dBm) (Internal)	Bluetooth 2.1 + EDR 2.4 GHz max. 10 dBm (Internal)
- Internal antenna	- Internal antenna
M12 connector (D-coded, female)	M12 connector (D-coded, female)
24 V DC M12 connector (A-coded, male) 9 V DC ... 30 V DC typ. 54 mA (at 24 V DC)	24 V DC M12 connector (A-coded, male) 9 V DC ... 30 V DC typ. 36 mA (at 24 V DC)
802.11i WPA PSK (preshared key) WPA2 AES TKIP PIN Non-discoverable	PIN Non-discoverable
Access point/client adapter for WLAN and Bluetooth Web interface, MODE button, AT commands (TCP/IP), SSC	- Web interface, MODE button, AT commands (TCP/IP), SSC
Europe, USA, Canada, additional countries in the e-shop	Europe, USA, Canada, additional countries in the e-shop
67.8 mm / 92.7 mm / 33.2 mm IP65 -40°C ... 65°C 5% ... 93% (non-condensing) Wall mounting	67.8 mm / 92.7 mm / 33.2 mm IP65 -40°C ... 65°C 5% ... 93% (non-condensing) Wall mounting

Ordering data

Type	Order No.	Pcs./Pkt.
FL EPA 2	1005955	1

Accessories

FL EPA WMS	2701134	1
FL EPA RMS	2701133	1

Ordering data

Type	Order No.	Pcs./Pkt.
FL BT EPA 2	1005869	1

Accessories

FL EPA WMS	2701134	1
FL EPA RMS	2701133	1

Radioline wireless system

Easy startup with I/O mapping

Radioline is the transmission system from Phoenix Contact for extended systems and networks with up to 250 stations.

Radioline transmits I/O signals as well as serial data.

With a slight turn of the thumbwheel, you can distribute and multiply I/O signals freely in your network.

The range* depends on the wireless system selected:

– 2.4 GHz - up to 5 km
– 868 MHz - up to 20 km
– 900 MHz - up to 32 km

Network applications

– I/O data mode: simple I/O signal distribution in the network
– PLC/Modbus RTU mode: I/O integration into the control level using the Modbus protocol
– PLC/Modbus RTU dual mode: I/O integration into the control level using the Modbus protocol. Parallel connection of additional Modbus/RTU slaves
– Serial data mode: networking of controllers and serial I/O devices, simple RS-232/RS-485 cable replacement

Radioline NEMA 4X

– For outdoor installation
– 2 digital inputs, 2 relay outputs, 1 analog input (cannot be extended)
– Interoperable with RAD-900-IFS

Notes:

*The range may be considerably above or below that stated. It is dependent on the environment, antenna technology, transmission power, and the product used.

The latest country registrations for the relevant product can be found on the Internet at phoenixcontact.com.

2.4 GHz wireless transceiver, for worldwide use

Ex:

Technical data

Wireless path		
Direction	Bi-directional	
Frequency range	2.4002 GHz ... 2.4785 GHz	
Data rate (adjustable)	16 kbps / 125 kbps / 250 kbps	
Number of channels	8 x 55	
Security	128-bit data encryption	
Connection method	RSMA (female)	
Serial port	RS-232	RS-485
Connection method	COMBICON plug-in screw terminal block	COMBICON plug-in screw terminal block
Serial transmission speed	0.3 ... 115.2 kbps	0.3 ... 187.5 kbps
Termination resistor (switchable via DIP switches)	-	390 Ω / 150 Ω / 390 Ω
Analog output	RSSI voltage output	
Signal range	0 V ... 3 V	
Digital output	RF link relay output	
Contact type	PDT	
Switching voltage	30 V AC/DC / 60 V DC	
Switching current	500 mA (30 V AC/DC)	
General data		
Supply voltage	19.2 V DC ... 30.5 V DC	
Current consumption	≤ 65 mA (at 24 V DC, at 25°C, stand-alone)	
Degree of protection	IP20	
Ambient temperature range	-40°C ... 70°C (>55°C derating) -40 °F ... 158 °F (>131°F derating)	
Permissible humidity (operation)	20% ... 85%	
Dimensions W / H / D	17.5 / 116 / 114.5 mm	
Screw connection rigid / flexible / AWG	0.2 ... 2.5 mm² / 0.2 ... 2.5 mm² / 24 - 14	
EMC note	Class A product, see page 527	
Conformance/approvals		
ATEX	II 3 G Ex nA nC IIC T4 Gc	
IECEx	Ex nA nC IIC T4 Gc	
UL, USA/Canada	UL 508 Listed Class I, Div. 2, Groups A, B, C, D T4A Class I, Zone 2, IIC T4	

Ordering data

Description	Type	Order No.	Pcs./Pkt.
Wireless module, can be extended with I/O extension modules			
	RAD-2400-IFS	2901541	1
- With Japan approval (no ATEX, IECEx or UL approval)	**RAD-2400-IFS-JP**	2702863	1
- For use in North America			
- For use in Australia			
Wireless module			
- For use in North America			

Accessories

CONFSTICK, configuration memory for the safe parallel operation of several wireless paths or networks			
RF band 1			
RF band 3	**RAD-CONF-RF3**	2902814	1
RF band 5	**RAD-CONF-RF5**	2902815	1
RF band 7	**RAD-CONF-RF7**	2902816	1
Memory stick, for saving custom configuration data	**RAD-MEMORY**	2902828	1
USB cable, for diagnostics and extended configuration	**RAD-CABLE-USB**	2903447	1

new

868 MHz wireless transceiver, for license-free use in Europe

Ex:

Technical data	
Bi-directional	
869.4 MHz ... 869.65 MHz	
1.2 kbps / 9.6 kbps / 19.2 kbps / 60 kbps / 120 kbps	
14	
128-bit data encryption	
RSMA (female)	
RS-232	RS-485
COMBICON plug-in screw terminal block	COMBICON plug-in screw terminal block
0.3 ... 115.2 kbps	0.3 ... 115.2 kbps
-	390 Ω / 150 Ω / 390 Ω
RSSI voltage output	
0 V ... 3 V	
RF link relay output	
PDT	
30 V AC / 60 V DC	
500 mA	
19.2 V DC ... 30.5 V DC	
≤ 65 mA (at 24 V DC, at 25°C, stand-alone)	
IP20	
-40°C ... 70°C	
-40 °F ... 158 °F	
20% ... 85%	
17.5 / 116 / 114.5 mm	
0.2 ... 2.5 mm² / 0.2 ... 2.5 mm² / 24 - 14	
Class A product, see page 527	
II 3 G Ex nA nC IIC T4 Gc	
Ex nA nC IIC T4 Gc	
-	

Ordering data		
Type	Order No.	Pcs./Pkt.
RAD-868-IFS	2904909	1

Accessories		
RAD-868-CONF-RF1	2702197	1
RAD-MEMORY	2902828	1
RAD-CABLE-USB	2903447	1

900 MHz wireless transceiver, for license-free use in America and Australia

Ex:

Technical data	
RAD-900-IFS	RAD-900-IFS-AU
Bi-directional	Bi-directional
902 MHz ... 928 MHz	915 MHz ... 928 MHz
16 kbps / 125 kbps / 250 kbps / 500 kbps	16 kbps / 125 kbps / 250 kbps
-	-
128-bit data encryption	128-bit data encryption
RSMA (female)	RSMA (female)
RS-232	RS-485
COMBICON plug-in screw terminal block	COMBICON plug-in screw terminal block
0.3 ... 115.2 kbps	0.3 ... 115.2 kbps
-	390 Ω / 150 Ω / 390 Ω
RSSI voltage output	
0 V ... 3 V	
RF link relay output	
PDT	
30 V AC/DC	
500 mA	
10.8 V DC ... 30.5 V DC	
328 mA (@24 V DC)	
IP20	
-40°C ... 70°C	
-40 °F ... 158 °F	
20% ... 85%	
35 / 116 / 114.5 mm	
0.2 ... 2.5 mm² / 0.2 ... 2.5 mm² / 24 - 14	
-	
-	
Class I, Div. 2, Groups A, B, C, D	

Ordering data		
Type	Order No.	Pcs./Pkt.
RAD-900-IFS	2901540	1
RAD-900-IFS-AU	2702878	1

Accessories		
RAD-900-CONF-RF1	2702122	1
RAD-MEMORY	2902828	1
RAD-CABLE-USB	2903447	1

900 MHz wireless transceiver, for outdoor installation (NEMA 4X)

Ex:

Technical data
Bi-directional
902 MHz ... 928 MHz
16 kbps / 125 kbps / 250 kbps / 500 kbps
-
128-bit data encryption
N (female)
-
-
RSSI voltage output
0 V ... 3 V
RF link relay output
PDT
30 V AC/DC
500 mA
10.8 V DC ... 30.5 V DC / 100 V AC ... 240 V AC
110 mA (120 V AC) / 368 mA (10.8 V DC)
NEMA 4
-40°C ... 70°C (DC)
-40°C ... 65°C (AC)
20% ... 85%
220 / 90 / 120 mm
0.14 ... 2.5 mm² / 0.14 ... 2.5 mm² / 26 - 14
-
-
ANSI/ISA/CSA 22.2 61010-2-201, UL 50E Type 4
Class I, Div. 2, Groups A, B, C, D T4
Class I, Zone 2, IIC T4

Ordering data		
Type	Order No.	Pcs./Pkt.
RAD-900-DAIO6	2702877	1

Accessories

Radioline – I/O mapping now in wired format too

The popular, straightforward method of distributing I/O information using white thumbwheels on the front of the equipment is now also available for RS-485 networks.

Addressing the RS-485 front module is quick and easy too – all it takes is a turn of the yellow thumbwheel. This enhances the Radioline system's flexibility, allowing it to be used for solutions in even more applications.

The device supports three functions:

Supplementing a wireless system

A Radioline wireless system on an existing master can be expanded to include new RS-485 stations. RS-485 and wireless modules form a combined system.

Operation in a purely RS-485 network

In an RS-485 network with up to 99 Radioline stations, you can now distribute I/O signals between the stations. This is done without the need for software configuration by simply turning the thumbwheel.

Stand-alone operation as a Modbus slave

The new Radioline RS-485 stations can also be operated on any Modbus/RTU master.

Alternative transmission media

To increase the range, it is of course possible to replace the RS-485 line with alternative transmission media.

Phoenix Contact offers a range of converters for fiber optic cables, SHDSL, wireless or Ethernet technology.

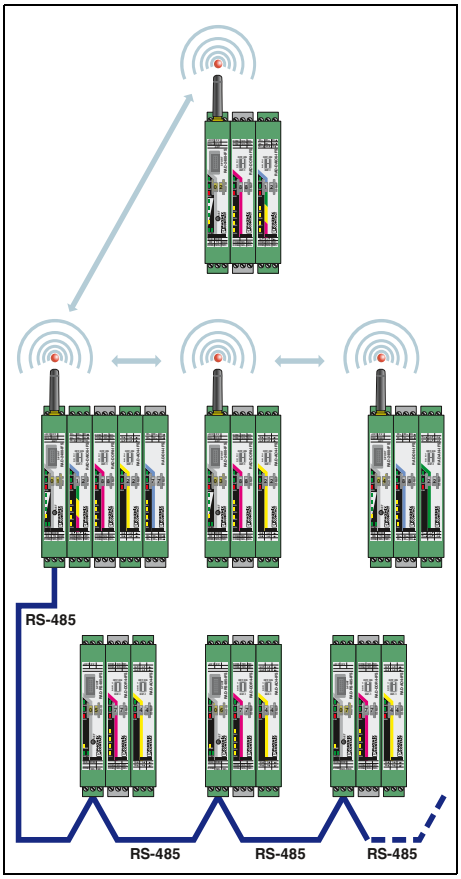

I/O to I/O in a combined system

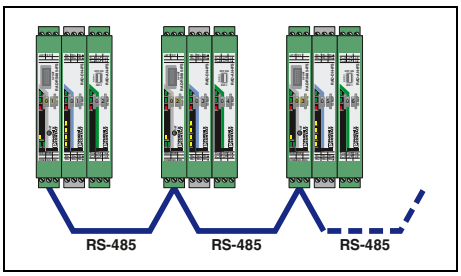

I/O to I/O via RS-485

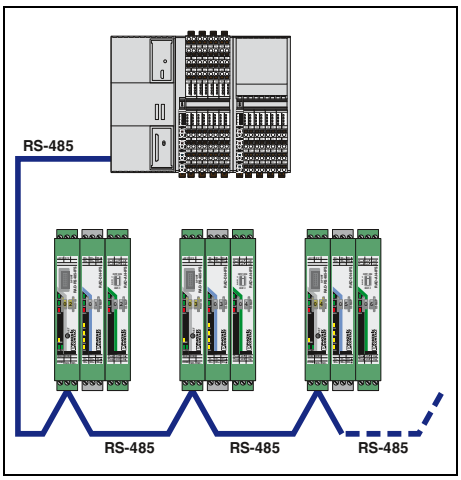

I/O to serial (Modbus/RTU slave)

Multipoint multiplexer

Your advantages
- Up to 99 bus stations in the network
- Modular extension with up to 32 I/O extension modules supported
- Quick and easy startup without programming
- Can be combined with Radioline wireless modules

RS-485 serial interface

Ex:

Technical data

Serial port		RS-485
Connection method		COMBICON plug-in screw terminal block
Serial transmission speed		0.3 ... 115.2 kbps (default setting: 19.2/8/E/1)
Termination resistor (switchable via DIP switches)		390 Ω / 150 Ω / 390 Ω
Digital output		Link relay output
Contact type		PDT
Switching voltage		30 V AC/DC / 60 V DC
Switching current		500 mA (30 V AC/DC)
General data		
Supply voltage		19.2 V DC ... 30.5 V DC
Current consumption		≤ 65 mA (at 24 V DC, at 25°C, stand-alone)
Degree of protection		IP20
Ambient temperature range		-40°C ... 70°C (>55°C derating) -40 °F ... 158 °F (>131°F derating)
Permissible humidity (operation)		20% ... 85%
Dimensions	W / H / D	17.5 / 113 / 114.5 mm
Screw connection rigid / flexible / AWG		0.2 ... 2.5 mm² / 0.2 ... 2.5 mm² / 24 - 14
EMC note		Class A product, see page 527
Conformance/approvals		
ATEX		II 3 G Ex nA nC IIC T4 Gc
IECEx		Ex nA nC IIC T4 Gc
UL, USA/Canada		UL 508 Listed Class I, Div. 2, Groups A, B, C, D T4A Class I, Zone 2, IIC T4

Ordering data

Description	Type	Order No.	Pcs./Pkt.
Multipoint multiplexer			
	RAD-RS485-IFS	2702184	1

Accessories

Shield connection terminal block, with snap-on foot, for mounting on NS 35... DIN rail, for shield support on busbars Ø 3-8 mm	**SKS 8-SNS35**	3062786	10
Plug-in terminal, for connecting the incoming and outgoing bus line	**TVFKC 1,5/ 3-ST**	1713842	50
USB cable, for diagnostics and extended configuration	**RAD-CABLE-USB**	2903447	1

I/O extension modules

- Easy I/O mapping via thumbwheel
- Digital wide-range inputs (0 ... 250 V AC/DC)
- 0 ... 100 Hz digital pulse inputs
- Relay or transistor outputs
- Easy module replacement even during operation (hot swap)
- Extended temperature range (-40°C ... +70°C)

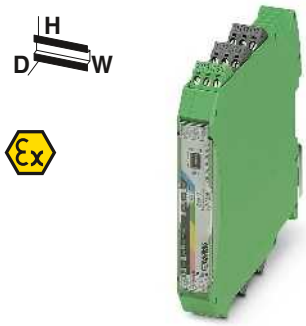

2 digital inputs/outputs and 1 analog input/output

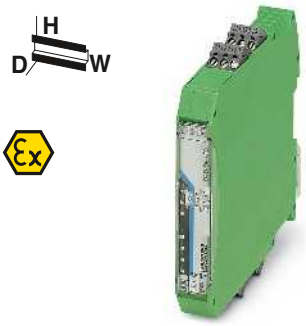

4 digital inputs

		Technical data		Technical data
Analog input				
Number of inputs		1		-
Resolution		16 bit		-
Signal range (configurable using the DIP switch)		0 mA ... 20 mA / 4 mA ... 20 mA		-
Accuracy		≤ 0.02% (at 25°C)		-
Supply voltage		≥ 12 V DC (for passive sensors (via terminal PWR1, +I1))		-
Digital input				
Number of inputs		2		4
Switching level	1 signal ("H")	10 V AC/DC ... 50 V AC/DC (low-voltage input) 50 V AC/DC ... 250 V AC/DC (high-voltage input)		10 V AC/DC ... 50 V AC/DC (low-voltage input) 50 V AC/DC ... 250 V AC/DC (high-voltage input)
Switching level	0 signal ("L")	0 V AC/DC ... 4 V AC/DC (low-voltage input) 0 V AC/DC ... 20 V AC/DC (high-voltage input)		0 V AC/DC ... 4 V AC/DC (low-voltage input) 0 V AC/DC ... 20 V AC/DC (high-voltage input)
Input frequency		≤ 2 Hz		≤ 2 Hz
Pulse input				
Number of inputs		-		-
Signal range		-		-
Input frequency		-		-
Pulse length		-		-
Analog output				
Number of outputs		1		-
Signal range		0 mA ... 20 mA 4 mA ... 20 mA	0 V ... 10 V	-
Accuracy		≤ 0.02% (at 25°C)	typ. 0.5%	-
Load R_B		≤ 500 Ω	≥ 10 kΩ	-
Digital output				
Contact type		2 x Relay output		-
Switching voltage		250 V AC 24 V DC		-
Switching current	min./max.	≥ 10 mA / 2 A (per channel)		-
Switching frequency		2 Hz		-
General data				
Supply voltage		19.2 V DC ... 30.5 V DC (DIN rail connector)		19.2 V DC ... 30.5 V DC (DIN rail connector)
Current consumption		≤ 95 mA (at 24 V DC, at 25°C)		≤ 11 mA (at 24 V DC, at 25°C)
Degree of protection		IP20		IP20
Ambient temperature range		-40°C ... 70°C		-40°C ... 70°C
Dimensions	W / H / D	17.5 / 113 / 114.5 mm		17.5 / 113 / 114.5 mm
EMC note		Class A product, see page 527		Class A product, see page 527
Conformance/approvals				
ATEX		Ex II 3 G Ex nA nC IIC T4 Gc		Ex II 3 G Ex nA IIC T4 Gc
IECEx		Ex nA nC IIC T4 Gc		Ex nA IIC T4 Gc
UL, USA/Canada		UL 508 Listed Class I, Div. 2, Groups A, B, C, D T4A Class I, Zone 2, IIC T4		UL 508 Listed Class I, Div. 2, Groups A, B, C, D T4A Class I, Zone 2, IIC T4

	Ordering data			Ordering data		
Description	Type	Order No.	Pcs./Pkt.	Type	Order No.	Pcs./Pkt.
Analog/digital I/O module	RAD-DAIO6-IFS	2901533	1			
Digital input module				RAD-DI4-IFS	2901535	1
Digital relay output module						
Digital/pulse input module						
Digital transistor output module						

	Accessories			Accessories		
Analog/digital I/O module	RAD-DAIO6-IFS	2901533	1			
Digital relay output module				RAD-DOR4-IFS	2901536	1
Digital input module						
Digital transistor output module						
Digital/pulse input module						

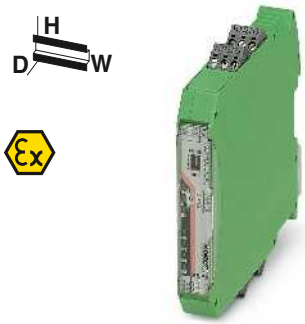

4 digital relay outputs

8 digital inputs and 2 pulse inputs

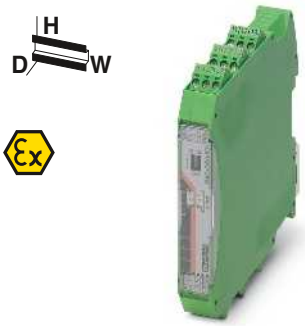

8 digital transistor outputs

Ex:

Technical data

-	
-	
-	
-	
-	
-	
-	
-	8
-	10 V DC ... 30.5 V DC
-	0 V DC ... 4 V DC
-	≤ 10 Hz (Static mode)
-	2
-	0 V DC ... 30.5 V DC
-	< 100 Hz (Pulse counter mode)
-	≥ 5 ms (Pulse/pause ratio 1:1)
-	-
-	-
-	-
-	-
4 x Relay output	-
250 V AC/DC	-
≥ 10 mA / 5 A (per channel)	-
2 Hz	-
19.2 V DC ... 30.5 V DC (DIN rail connector)	19.2 V DC ... 30.5 V DC (DIN rail connector)
≤ 55 mA (at 24 V DC, at 25°C)	≤ 18 mA (at 24 V DC, at 25°C)
IP20	IP20
-40°C ... 70°C	-40°C ... 70°C
17.5 / 113 / 114.5 mm	17.5 / 113 / 114.5 mm
Class A product, see page 527	Class A product, see page 527
II 3 G Ex nA nC IIC T4 Gc	II 3 G Ex nA IIC T4 Gc
Ex nA nC IIC T4 Gc	Ex nA IIC T4 Gc
UL 508 Listed	UL 508 Listed
Class I, Div. 2, Groups A, B, C, D T4A	Class I, Div. 2, Groups A, B, C, D T4A
Class I, Zone 2, IIC T4	Class I, Zone 2, IIC T4

Ordering data

Type	Order No.	Pcs./Pkt.
RAD-DOR4-IFS	2901536	1
RAD-DI8-IFS	2901539	1

Accessories

RAD-DI4-IFS	2901535	1
RAD-DO8-IFS	2902811	1

Technical data

-	
-	
-	
-	
-	
-	
-	
-	8
-	10 V DC ... 30.5 V DC
-	0 V DC ... 4 V DC
-	≤ 10 Hz (Static mode)
-	2
-	0 V DC ... 30.5 V DC
-	< 100 Hz (Pulse counter mode)
-	≥ 5 ms (Pulse/pause ratio 1:1)
-	-
-	-
-	-
-	-
8 x Transistor output, active	-
30.5 V DC	-
- / 200 mA (per channel)	-
10 Hz	-
19.2 V DC ... 30.5 V DC (DIN rail connector)	19.2 V DC ... 30.5 V DC (DIN rail connector)
≤ 22 mA (at 24 V DC, at 25°C)	≤ 55 mA (at 24 V DC, at 25°C)
IP20	IP20
-40°C ... 70°C	-40°C ... 70°C
17.5 / 113 / 114.5 mm	17.5 / 113 / 114.5 mm
Class A product, see page 527	Class A product, see page 527
II 3 G Ex nA IIC T4 Gc	II 3 G Ex nA IIC T4 Gc
Ex nA IIC T4 Gc	Ex nA IIC T4 Gc
UL 508 Listed	UL 508 Listed
Class I, Div. 2, Groups A, B, C, D T4A	Class I, Div. 2, Groups A, B, C, D T4A
Class I, Zone 2, IIC T4	Class I, Zone 2, IIC T4

Ordering data

Type	Order No.	Pcs./Pkt.
RAD-DO8-IFS	2902811	1

Accessories

RAD-DI8-IFS	2901539	1

I/O extension modules

- Easy I/O mapping via thumbwheel
- Analog inputs (0/4 ... 20 mA)
- Temperature inputs for Pt 100 sensors
- Analog outputs (0/4 ... 20 mA or 0 ... 10 V)
- Easy module replacement even during operation (hot swap)
- Extended temperature range (-40°C ... +70°C)

4 analog current inputs

Ex:

Technical data

Analog input		
Number of inputs		4
Resolution		16 bit
Signal range (configurable using the DIP switch)		0 mA ... 20 mA / 4 mA ... 20 mA
Accuracy		≤ 0.02% (at 25°C)
Supply voltage		≥ 12 V DC (for passive sensors (via terminal PWR1, +I1))
Analog input		
Description of the input		-
Number of inputs		-
Temperature measuring range		-
Analog output		
Number of outputs		-
Signal range		-
Accuracy		-
Load R_B		-
General data		
Supply voltage		19.2 V DC ... 30.5 V DC (DIN rail connector)
Current consumption		≤ 120 mA (at 24 V DC, at 25°C)
Degree of protection		IP20
Ambient temperature range		-40°C ... 70°C
Dimensions	W / H / D	17.5 / 113 / 114.5 mm
EMC note		Class A product, see page 527
Conformance/approvals		
ATEX		II 3 G Ex nA IIC T4 Gc
IECEx		Ex nA IIC T4 Gc
UL, USA/Canada		UL 508 Listed Class I, Div. 2, Groups A, B, C, D T4A Class I, Zone 2, IIC T4

Ordering data

Description	Type	Order No.	Pcs./Pkt.
Analog input module Temperature input module Analog output module	**RAD-AI4-IFS**	2901537	1

Accessories

Analog output module Analog input module Temperature input module	**RAD-AO4-IFS**	2901538	1

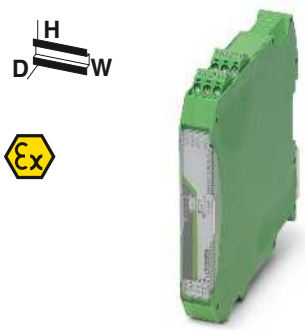

4 temperature inputs

Ex:

Technical data

-	
-	
-	
-	
-	
Pt 100 input	
4	
-50°C ... 250°C	
-	
-	
-	
-	
19.2 V DC ... 30.5 V DC (DIN rail connector)	
≤ 38 mA (at 24 V DC, at 25°C)	
IP20	
-40°C ... 70°C	
17.5 / 113 / 114.5 mm	
Class A product, see page 527	
II 3 G Ex nA IIC T4 Gc	
Ex nA IIC T4 Gc	
UL 508 Listed	
Class I, Div. 2, Groups A, B, C, D T4A	
Class I, Zone 2, IIC T4	

Ordering data

Type	Order No.	Pcs./Pkt.
RAD-PT100-4-IFS	2904035	1

Accessories

RAD-AO4-IFS	2901538	1

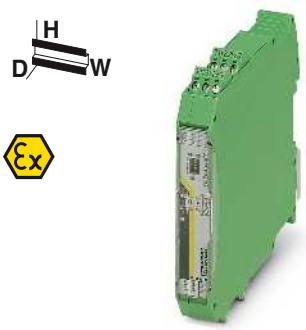

4 analog current/voltage outputs

Ex:

Technical data

-	
-	
-	
-	
-	
-	
-	
-	
4	
0 mA ... 20 mA	0 V ... 10 V
4 mA ... 20 mA	
≤ 0.02% (at 25°C)	typ. 0.5%
≤ 500 Ω	≥ 10 kΩ
19.2 V DC ... 30.5 V DC (DIN rail connector)	
≤ 115 mA (at 24 V DC, at 25°C)	
IP20	
-40°C ... 70°C	
17.5 / 113 / 114.5 mm	
Class A product, see page 527	
II 3 G Ex nA IIC T4 Gc	
Ex nA IIC T4 Gc	
UL 508 Listed	
Class I, Div. 2, Groups A, B, C, D T4A	
Class I, Zone 2, IIC T4	

Ordering data

Type	Order No.	Pcs./Pkt.
RAD-AO4-IFS	2901538	1

Accessories

RAD-AI4-IFS	2901537	1
RAD-PT100-4-IFS	2904035	1

WirelessHART gateway

The **RAD-WHG/WLAN-XD** is a WirelessHART gateway with integrated 802.11b/g WLAN transceiver. It converts HART data to Modbus/TCP for easy integration into almost any host system.

Features:

- Simple programming and diagnostics using an embedded web server or HART programmer
- WirelessHART gateway supports 250 WirelessHART devices
- 802.11b/g client can be used as WirelessHART backhaul connection with 802.11i (WPA2) 128-bit AES encryption
- Fully meshed routing (self-organizing and self-healing network) with WirelessHART
- WirelessHART uses channel hopping as a means of tolerating interference

WirelessHART gateway, for worldwide use

Ex:

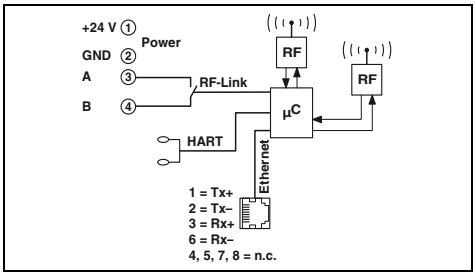

Technical data

Wireless path		
Interface description		WLAN in accordance with IEEE 802.11 b/g
Direction		Bi-directional
Frequency range		2.4 GHz ... 2.472 GHz
Number of channels		13
Connection method		RSMA (female)
Wireless path		
Interface description		WirelessHART
Frequency range		2.4 GHz ... 2.4835 GHz
Transmission power		0 ... 10 dBm
Number of channels		15
Connection method		RSMA (female)
Ethernet interface		
Connection method		RJ45
Transmission speed		10/100 Mbps
General data		
Supply voltage		9 V DC ... 30 V DC
Current consumption	typ. / max.	125 mA (at 24 V DC) / 300 mA (at 24 V DC)
Degree of protection		IP20
Ambient temperature range		-40°C ... 70°C
Housing material		Polyamide PA non-reinforced
Dimensions	W / H / D	45 / 99 / 114.5 mm
Screw connection rigid / flexible / AWG		0.2 ... 4 mm^2 / 0.2 ... 2.5 mm^2 / 24 - 14
Conformance/approvals		
CSA, USA		Class I, Zone 2, Group IIC; AEx nA IIC T4
CSA, Canada		Class I, Div. 2 Groups A,B,C,D Ex nA IIC T4

Ordering data

Description	Type	Order No.	Pcs./Pkt.
WirelessHART gateway			
	RAD-WHG/WLAN-XD	**2900178**	1

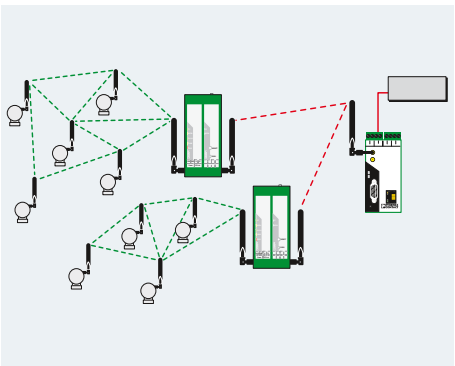

WirelessHART adapter

The **RAD-WHA-1/2NPT** is an adapter that allows up to 4 HART devices to be connected to a WirelessHART network.

Features:
- Allows wired HART devices to transfer data on a WirelessHART network
- Connect up to 4 HART device to one adapter
- Allows connection of one standard 4... 20 mA signal for easy integration of non-HART devices into a WirelessHART network
- 1/2-inch NPT fitting for distributed or direct device connection
- Removable antenna for connection of coaxial cable and high gain antenna

WirelessHART

WirelessHART adapter, for worldwide use

Ex:

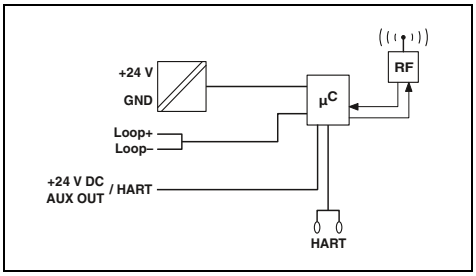

Technical data

Wireless path		
Interface description		WirelessHART
Direction		Bi-directional
Frequency range		2.4 GHz ... 2.4835 GHz
Number of channels		15
Connection method		N (female)
Analog input		
Number of inputs		1
Signal range		4 mA ... 20 mA
General data		
Supply voltage		11 V DC ... 30 V DC
Current consumption	max.	95 mA
Degree of protection		IP65
Ambient temperature range		-40°C ... 70°C
Housing material		Aluminum, die-cast, corrosion resistant, powder-coated
Dimensions	W / H / D	87.2 / 161 / 65.3 mm
Connection method		Flying leads, 20 AWG

Ordering data

Description	Type	Order No.	Pcs./Pkt.
WirelessHART adapter			
	RAD-WHA-1/2NPT	**2900100**	1

Wireless multiplexer

Wireless MUX – The wireless signal cable

The Wireless MUX transmits 16 digital and 2 analog signals bidirectionally. The Wireless MUX is supplied ready to use: Unpack – connect – switch on – and you have a working wireless path.

– Range*:
With omnidirectional antenna, 50 m to 100 m in halls, up to 200 m outdoors.

Features:

– Automatic establishment of the connection and signal exchange, thanks to fixed device pairing
– No configuration or settings necessary
– Extremely robust and reliable
– Interference-free operation alongside WLAN
– Typical transmission time of 10 ms

Notes:

* The range may be significantly above or below that stated, and depends on the environment, antenna technology, and the product used.

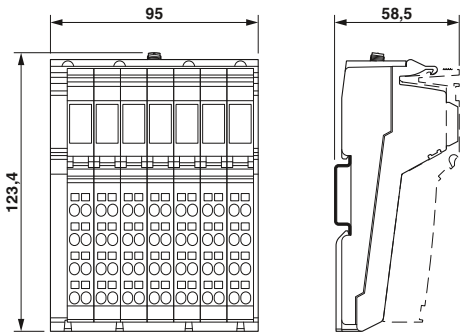

Wireless set

EAC MIC

Technical data

Wireless interface		
Wireless standard		Based on Bluetooth 4.0
Frequency range		2.402 GHz ... 2.48 GHz (ISM bandwidth)
Antenna connection method		RSMA (female)
Power supply for module electronics		
Supply voltage		24 V DC
Supply voltage range		19.2 V DC ... 30.5 V DC (via power connector)
Digital inputs		
Connection technology		1-conductor
Number of inputs		16
Digital outputs		
Connection technology		1-conductor
Number of outputs		16
Analog inputs		
Number of inputs		2
Voltage input signal		0 V ... 10 V
Current input signal		0 mA ... 20 mA
Measured value resolution		12 bits
Analog outputs		
Number of outputs		2
Voltage output signal		0 V ... 10 V
Current output signal		0 mA ... 20 mA
DAC resolution		12 Bit
General data		
Dimensions	W / H / D	95 mm / 123.4 mm / 57 mm
Degree of protection		IP20
Ambient temperature (operation)		-25°C ... 60°C
EMC note		Class A product, see page 527
Conformance/approvals		
Conformance		CE-compliant (RED Directive 2014/53/EU) FCC Directive, Part 15.247 ISC Directive RSS 210
UL, USA/Canada		UL 508 Listed

Ordering data

Description	Type	Order No.	Pcs./Pkt.
Wireless MUX set, consisting of two modules including antennas, each with 16 digital and 2 analog inputs and outputs			
- With OMNI antennas	**ILB BT ADIO MUX-OMNI**	2884208	1
- Without antennas	**ILB BT ADIO MUX**	2702875	1

RAD-Line Ethernet with Trusted Wireless

The **RAD-ISM-900-EN-BD...** wireless transceiver enables the wireless connection of several distributed controllers to a central location (controller) via an Ethernet or serial connection.

Features:

- Operates in the license-free 902 - 928 MHz ISM band
- Frequency-hopping spread spectrum technology
- Provides an interface for data transfer between a 900 MHz wireless transmission system and Ethernet, RS-232, RS-422 or RS-485 interfaces
- Contains an adjustable 10 mW ... 1 W transmitter
- Supports TCP/IP, UDP and IP v4 protocols
- Programmable for point-to-point, point-to-multipoint and multipoint-to-point configurations
- Incorporates security using selectable 128/192/256-bit AES encryption
- **RAD-ISM-900-EN-BD-BUS** features an integrated bus foot to connect I/O modules (addressable via Modbus)
- Individual modules can be configured as master, slave or repeater using integrated web browser interface
- **RAD-ISM-900-EN-BD/B** is a dedicated slave wireless transceiver with no Ethernet ports

Notes:

The products are offered exclusively for export outside the European Economic Area (EEA).

Wireless transceiver for Ethernet and serial interfaces (RS-232, RS-422/RS-485)

Ex:

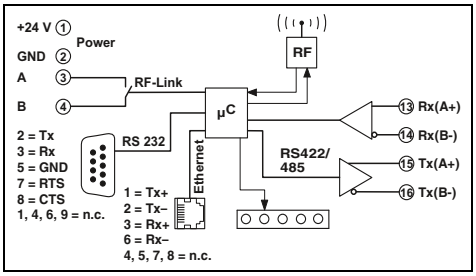

Technical data

Wireless path			
Direction		Bi-directional	
Frequency range		902 MHz ... 928 MHz	
Transmission power		10 ... 30 dBm	
Serial port		RS-232	RS-485
Connection method		D-SUB-9 female connector	COMBICON plug-in screw terminal block
Serial transmission speed		300 ... 57.6 kbps	
Data format/encoding		Asynchronous	
Data flow control/protocols		RTS/CTS	
General data			
Supply voltage		11 V DC ... 30 V DC	
Current consumption		250 mA (at 24 V DC)	
Degree of protection		IP20	
Ambient temperature range		-40°C ... 65°C	
Dimensions	W / H / D	52 / 99 / 115 mm	
Screw connection rigid / flexible / AWG		0.2 ... 4 mm² / 0.2 ... 2.5 mm² / 24 - 14	
Conformance/approvals			
Conformance		FCC Directive, Part 15.247 ISC Directive RSS 210	
UL, USA/Canada		Class I, Div. 2, Groups A, B, C, D	

Ordering data

Description	Type	Order No.	Pcs./Pkt.
Wireless module with optional Ethernet and serial interfaces			
Bus foot for I/O extension modules	**RAD-ISM-900-EN-BD-BUS**	2900017	1
Cannot be extended	**RAD-ISM-900-EN-BD**	2900016	1
Without serial interfaces	**RAD-ISM-900-EN-BD/B**	2901205	1

2.4 GHz/5 GHz accessories

Omnidirectional antennas

Omnidirectional antennas to increase gain.

– Standard omnidirectional antennas

Gain 2 dBi (2.4 GHz)

Gain 2.5 dBi (2.4 GHz) / 5 dBi (5 GHz)

	Technical data	Technical data
General data		
Ambient temperature (operation)	-20°C ... 65°C	-40°C ... 70°C
Degree of protection	IP65	IP68
Gain	2 dBi -	2.5 dBi (2.4 GHz) 5 dBi (5 GHz)
Impedance	50 Ω	50 Ω
Horizontal / vertical apex angle	360 ° / 75 °	360 ° / 30 ° (at 2.4 GHz) 360 ° / 16 ° (at 5 GHz)
Dimensions W / H	7.8 mm / 82.5 mm	23 mm / 180 mm
Frequency range	2.4 GHz	2.4 GHz ... 2.5 GHz / 5.15 GHz ... 5.83 GHz
Scope of delivery	incl. mounting material	-

	Ordering data			Ordering data		
Description	Type	Order No.	Pcs./Pkt.	Type	Order No.	Pcs./Pkt.
Omnidirectional antenna						
With connection RSMA (male)	RAD-ISM-2400-ANT-OMNI-2-1-RSMA	2701362	1			
With connection N (male)				ANT-OMNI-2459-02	2701408	1

2.4 GHz/5 GHz accessories

Omnidirectional antennas

Omnidirectional antennas to increase gain.

– With vandalism protection, thanks to increased impact strength

Gain 3 dBi (2.4 GHz)

Dual band,
gain up to 6 dBi (2.4 GHz) / up to 8 dBi (5 GHz)

	Technical data	Technical data
General data		
Ambient temperature (operation)	-40°C ... 80°C	-40°C ... 80°C
Degree of protection	IP55	IP68
Impact strength	IK08	-
Gain	3 dBi -	6 dBi (2.4 GHz, when mounted on metal surface) 8 dBi (5.6 GHz, when mounted on metal surface)
Impedance	50 Ω	50 Ω
Horizontal / vertical apex angle	360 ° / 85 °	360 ° / -
Dimensions W / H	86 mm / 43 mm	92 mm / 51 mm
Frequency range	2.4 GHz	2.4 GHz / 5.15 GHz ... 5.83 GHz

	Ordering data			Ordering data		
Description	Type	Order No.	Pcs./Pkt.	Type	Order No.	Pcs./Pkt.
OMNI omnidirectional antenna with protection against vandals						
With connection RSMA (male)	RAD-ISM-2400-ANT-VAN-3-0-RSMA	2701358	1			
With connection N (female)				RAD-ISM-2459-ANT-FOOD-6-0-N	2702898	1
Mounting material for wall mounting	RAD-ANT-VAN-MKT	2885870	1			

2.4 GHz/5 GHz accessories

Omnidirectional antennas

Omnidirectional antennas to increase gain.
– High-quality omnidirectional antennas for wall and mast mounting

Gain 6 dBi (2.4 GHz)

Gain 5 dBi (5 GHz)

	Technical data	Technical data
General data		
Ambient temperature (operation)	-40°C ... 75°C	-45°C ... 70°C
Degree of protection	IP67	IP64
Gain	6 dBi	5 dBi
Impedance	50 Ω	50 Ω
Horizontal / vertical apex angle	360 ° / 30 °	360 ° / 25 °
Dimensions W / H	22 mm / 250 mm	16 mm / 130 mm
Frequency range	2.4 GHz ... 2.5 GHz	5.15 GHz ... 5.875 GHz
Scope of delivery	incl. mounting material	incl. mounting material

	Ordering data			Ordering data		
Description	Type	Order No.	Pcs./Pkt.	Type	Order No.	Pcs./Pkt.
Omnidirectional antenna						
With connection N (female)	**RAD-ISM-2400-ANT-OMNI-6-0**	2885919	1	**ANT-OMNI-5900-01**	2701347	1

2.4 GHz/5 GHz accessories

Directional wireless antennas

Directional wireless antennas with high gain for transmission over longer distances.
– For wall or mast mounting

Gain 9 dBi (2.4 GHz / 5 GHz)

Gain: 19 dBi (2.4 GHz)

	Technical data		Technical data
General data	ANT-DIR-2459-01	ANT-DIR-5900-01	
Ambient temperature (operation)	-40°C ... 75°C	-40°C ... 80°C	-40°C ... 70°C
Degree of protection	IP67	IP67	IP65
Gain	9 dBi	9 dBi	19 dBi
Impedance	50 Ω	50 Ω	50 Ω
Horizontal / vertical apex angle	75 ° / 55 ° (at 2.4 GHz) 55 ° / 55 ° (at 5 GHz)	70 ° / 60 ° (at 5 GHz) -	17 ° / 11 °
Dimensions W / H	80 mm / 101 mm	80 mm / 101 mm	610 mm / 419 mm
Frequency range	2.4 GHz ... 2.5 GHz / 5.15 GHz ... 5.875 GHz	5.15 GHz ... 5.875 GHz	2.4 GHz
Scope of delivery	incl. mounting material	incl. mounting material	incl. mounting material

	Ordering data			Ordering data		
Description	Type	Order No.	Pcs./Pkt.	Type	Order No.	Pcs./Pkt.
Panel directional wireless antenna (without cable)						
With connection N (female), dual band	**ANT-DIR-2459-01**	2701186	1			
With connection N (female), 2 emitters	**ANT-DIR-5900-01**	2701348	1			
Parabolic antenna						
With connection N (female)				**RAD-ISM-2400-ANT-PAR-19-0**	2867885	1

868 MHz/900 MHz accessories

Omnidirectional antennas
– For wall or mast mounting

Gain: 4 dBi (868 MHz)

Gain: 2.5 dBi (868 MHz)

	Technical data	Technical data
General data		
Ambient temperature (operation)	-40°C ... 75°C	-40°C ... 85°C
Degree of protection	IP67	IP67
Impact strength	-	IK08
Gain	4 dBi	2.5 dBi
Impedance	50 Ω	50 Ω
Connection method	N (female)	N (female)
Horizontal / vertical apex angle	360 ° / 30 °	360 ° / 55 °
Dimensions W / H	20 mm / 620 mm	80 mm / 40 mm
Frequency range	868 MHz ... 870 MHz	868 MHz ... 870 MHz
Scope of delivery	incl. mounting material	-

	Ordering data			Ordering data		
Description	Type	Order No.	Pcs./Pkt.	Type	Order No.	Pcs./Pkt.
Omnidirectional antenna						
	ANT-OMNI-868-01	2702136	1			
OMNI omnidirectional antenna with protection against vandals						
With connection N (female)				**ANT-OMNI-VAN-868-01**	1090616	1
Mounting material for wall mounting				**RAD-ANT-VAN-MKT**	2885870	1

868 MHz/900 MHz accessories

Directional wireless antennas
– For wall or mast mounting

Gain: 3.5 dBi (868 MHz)
Circular polarized

Yagi directional antenna,
up to 12 dBi gain (868/900 MHz)

	Technical data	Technical data	
General data		...-YAGI-6.5-N	...-YAGI-10-N
Ambient temperature (operation)	-40°C ... 75°C	-40°C ... 80°C	-40°C ... 80°C
Degree of protection	IP67	IP65	IP65
Gain	3.5 dBi	8.5 dBi	12.15 dBi
Impedance	50 Ω	50 Ω	50 Ω
Connection method	N (female)	N (female) with cable (0.6 m)	N (female) with cable (0.6 m)
Horizontal / vertical apex angle	135 ° / 90 °	100 ° / 62 °	56 ° / 46 °
Dimensions W / H	80 mm / 101 mm	60.5 mm / 172 mm	60.5 mm / 172 mm
Frequency range	865 MHz ... 870 MHz	868 MHz ... 960 MHz	868 MHz ... 960 MHz
Scope of delivery	incl. mounting material	incl. mounting material	incl. mounting material

	Ordering data			Ordering data		
Description	Type	Order No.	Pcs./Pkt.	Type	Order No.	Pcs./Pkt.
Panel directional wireless antenna (without cable)						
	ANT-DIR-868-01	2702137	1			
Directional wireless antenna						
				RAD-ISM-900-ANT-YAGI-6.5-N	2867814	1
				RAD-ISM-900-ANT-YAGI-10-N	5606614	1

Antenna cables

– Various cables for connection of different antennas
– Frequency range: 300 MHz ... 6 GHz

Antenna adapter cable, N (male) -> RSMA (male)

Antenna extension cable

	Technical data			Technical data		
General data						
Ambient temperature range	-40°C ... 85°C			-40°C ... 105°C		
Impedance	50 Ω			50 Ω		
	Ordering data			**Ordering data**		
Description	**Type**	**Order No.**	Pcs./Pkt.	**Type**	**Order No.**	Pcs./Pkt.
Antenna adapter cable						
0.5 m long	**RAD-PIG-RSMA/N-0.5**	2903263	1			
1 m long	**RAD-PIG-RSMA/N-1**	2903264	1			
2 m long	**RAD-PIG-RSMA/N-2**	2903265	1			
3 m long	**RAD-PIG-RSMA/N-3**	2903266	1			
5 m long	**RAD-PIG-RSMA/N-5**	2702140	1			
Antenna extension cable						
3 m long, N connection at both ends (male)				**RAD-CAB-EF393- 3M**	2867649	1
5 m long, N connection at both ends (male)				**RAD-CAB-EF393- 5M**	2867652	1
10 m long, N connection at both ends (male)				**RAD-CAB-EF393-10M**	2867665	1
15 m long, N connection at both ends (male)				**RAD-CAB-EF393-15M**	2885634	1

Accessories
Adapter/extension cables

– Extension or adaptation of wireless module for antenna
– Frequency range: 300 MHz ... 6 GHz

Panel feed-through

	Technical data			Technical data		
General data						
Ambient temperature range	-40°C ... 105°C			-40°C ... 105°C		
Impedance	50 Ω			50 Ω		
	Ordering data			**Ordering data**		
Description	**Type**	**Order No.**	Pcs./Pkt.	**Type**	**Order No.**	Pcs./Pkt.
Antenna cable						
50 cm long, N (male) -> N (male)	**FL LCX PIG-EF142-N-N**	2700677	1			
Antenna adapter cable						
0.5 m, N (female) -> RSMA (male)				**RAD-PIG-EF316-N-RSMA**	2701402	1

Accessories

Surge protection

– For installing the antenna outside buildings from a cable length of 3 m

Antenna surge protection

Surge protective device for coaxial lines

	Technical data	Technical data
General data		
Ambient temperature range	-40°C ... 90°C	-40°C ... 90°C
Degree of protection	IP68	IP68
Attenuation	typ. 0.05 dB (≤ 0.15 dB)	0.1 dB (≤ 6 GHz)
Frequency range	2.4 GHz ... 5.9 GHz	0 Hz ... 6 GHz

	Ordering data			Ordering data		
Description	Type	Order No.	Pcs./Pkt.	Type	Order No.	Pcs./Pkt.
COAXTRAB, protection adapter for antenna connections with Lambda/4 technology, 2.4 to 5.9 GHz						
Socket-socket	**CN-LAMBDA/4-5.9-BB**	2838490	1			
Male/female	**CN-LAMBDA/4-5.9-SB**	2800023	1			
COAXTRAB, protection adapter for coaxial cable systems, DC to 6 GHz						
Female-female				**CN-UB-70DC-6-BB**	2803166	1
Male-female				**CN-UB-70DC-6-SB**	2803153	1

Adapter

– For installing the antenna inside buildings

Sealing tape

– Provides additional weather protection for adapters, splitters, cable connections, etc.
– Self-vulcanizing

Adapter

Sealing tape

	Technical data	Technical data
General data		
Ambient temperature range	-65°C ... 165°C	-40°C ... 90°C
Degree of protection	IP20	
Impedance	50 Ω	-
Features	-	Self-vulcanizing
Width	38 mm	19 mm
Length	-	3 m
Thickness	-	0.75 mm

	Ordering data			Ordering data		
Description	Type	Order No.	Pcs./Pkt.	Type	Order No.	Pcs./Pkt.
Adapter						
N (female) -> N (female)	**RAD-ADP-N/F-N/F**	2867843	1			
Weather protection tape						
1.2 m long, 90° MCX (male) -> N (male)				**RAD-TAPE-SV-19-3**	2903182	1

Accessories

Antenna barrier

– For the safe use of standard antennas in the hazardous area

The antenna barrier limits the ignition energy at the antenna connection in an intrinsically safe way according to protection type Ex i. Standard antennas can therefore be used up to Ex zone 0.

For installation in Ex zone 2

	Technical data
General data	
Ambient temperature range	-40°C ... 75°C
Degree of protection	IP65
Frequency range	0.3 GHz ... 6 GHz
Conformance/approvals	
ATEX	Ex I (M1) [Ex ia Ma] I Ex II (1) G [Ex ia Ga] IIC Ex II (1) D [Ex ia Da] IIIC Ex II 3 (1) G Ex nA [ia Ga] IIC T6 Gc X Please follow the special installation instructions in the documentation!
IECEx	[Ex ia Ma] I [Ex ia Ga] IIC [Ex ia Da] IIIC Ex nA [ia Ga] IIC T6 Gc X

Ordering data			
Description	Type	Order No.	Pcs./Pkt.
Antenna barrier, universal frequency range			
N (female) -> N (female)	**BAR-ANT-N-N-EX**	2702198	1

Accessories

Antenna splitter

– For splitting HF signals between two antennas
– For connecting two panel antennas for repeater applications
– Use the **FL LCX PIG-EF142-N-N** antenna cable to connect two directional antennas

Antenna splitter

	Technical data
General data	
Ambient temperature range	-40°C ... 100°C
Degree of protection	IP65, when installed
Frequency range	0.3 GHz ... 6 GHz

Ordering data			
Description	Type	Order No.	Pcs./Pkt.
Antenna splitter			
	RAD-SPL-2-N/N	2702293	1
Antenna cable			
50 cm long, N (male) -> N (male)	**FL LCX PIG-EF142-N-N**	2700677	1

Leaky wave conductor and accessories

The leaky wave conductor is a cable that acts as an antenna, which emits continuously along its length. It ensures a continuous wireless connection when using track-guided systems, even in angled or difficult to reach spaces.

Leaky wave conductor

Alignment tool and cable tie

	Technical data	Technical data
General data		
Ambient temperature (operation)	-40°C ... 85°C	-
Cable, attenuation	14.7 dB/100 m, longitudinal attenuation (2.4 GHz)	-
Connection method	open end	-

	Ordering data			Ordering data		
Description	Type	Order No.	Pcs./Pkt.	Type	Order No.	Pcs./Pkt.
Leaky wave conductor						
- 2.4 GHz frequency band	**FL LCX CABLE 24 E**	2702553	1			
- 5 GHz frequency band	**FL LCX CABLE 5 E**	2702860	1			
Connector for leaky wave conductor	**FL LCX CON-N-F E**	2702518	1			
Termination resistor						
- for leaky wave conductor, N (male)	**FL LCX 50-OHM**	2884978	1			
- for device, RSMA (male)	**FL LCX 50-OHM-RSMA**	2702702	1			
Alignment tool for leaky wave conductor				**FL LCX TOOL E**	2702519	1
Cable tie for leaky wave conductor				**FL LCX CLAMP E**	2702520	100

Control box sets

Control box set for the FL WLAN 5100 access point for use directly in industrial environments or in protected outdoor areas.

Features:

- IP66 control box
- Mounting suitable for industrial use
- Bore holes, screw connections already included
- Various sets, suitable for the most common applications

		Technical data
General data		
Dimensions	W / H / D	174 mm / 254 mm / 137 mm

	Ordering data		
Description	Type	Order No.	Pcs./Pkt.
Control box set, IP66, including DIN rail, plugs, and screw connections			
- With 3 omnidirectional antennas and antenna cables	**FL RUGGED BOX**	2701204	1
	FL RUGGED BOX OMNI-1	2701430	1
- With 3 omnidirectional antennas, antenna cables, and 100 ... 240 V AC power supply	**FL RUGGED BOX OMNI-2**	2701439	1
- With one panel antenna, antenna cable, and 100 ... 240 V AC power supply	**FL RUGGED BOX DIR-1**	2701440	1
	Accessories		
Set for mast mounting of the FL RUGGED BOX housing, including screw clamps for masts up to 89 mm in diameter	**FL RUGGED BOX POLE SET**	2701205	1

900 MHz accessories

Omnidirectional antennas

- Mobile or stationary applications
- Point-to-multipoint configurations
- Small antennas are suitable for applications with a shorter range
- Large antennas are suitable for applications requiring longer range

2.15 dBi/7 dBi gain

5 dBi/8 dBi gain

	Technical data		Technical data	
General data	...-OMNI-0-6 / ...-OMNI-2-2-...	...-OMNI-5	...-OMNI-FG-3-N	...-OMNI-FG-6-N
Ambient temperature (operation)	-40°C ... 75°C	-40°C ... 80°C	-40°C ... 80°C	-40°C ... 80°C
Degree of protection	IP65	IP65	IP65	IP65
Gain	2.15 dBi	7 dBi	5.15 dBi	8 dBi
Impedance	50 Ω	50 Ω	50 Ω	50 Ω
Horizontal / vertical apex angle	360 ° / N/A	360 ° / 30 °	360 ° / 28 °	360 ° / 15 °
Dimensions W / H	0.3 cm / 8.9 cm	0.3 cm / 60.9 cm	2.38 in. / 44.25 in.	6.05 cm / 180.34 cm
Frequency range	900 MHz	900 MHz	902 MHz ... 928 MHz	900 MHz
Scope of delivery	incl. mounting material	incl. mounting material	incl. mounting material	incl. mounting material

	Ordering data			Ordering data		
Description	Type	Order No.	Pcs./Pkt.	Type	Order No.	Pcs./Pkt.
Omnidirectional antenna						
With connection MCX (male)	**RAD-ISM-900-ANT-OMNI-0-6**	2867160	1			
With connection RSMA (male)	**RAD-900-ANT-OMNI-2-2-RSMA**	2904801	1			
With connection N (female)	**RAD-ISM-900-ANT-OMNI-5**	2867199	1	**RAD-ISM-900-ANT-OMNI-FG-3-N**	2867791	1
With connection N (female)				**RAD-ISM-900-ANT-OMNI-FG-6-N**	2885579	1

900 MHz accessories

Directional wireless antennas (YAGI)

- Stationary applications
- Point-to-point configurations with line of sight

5 dBi gain,
with 0.6 m connecting cable

8.5 dBi/12 dBi gain,
with 0.6 m connecting cable

	Technical data	Technical data	
General data		...-YAGI-6.5-N	...-YAGI-10-N
Ambient temperature (operation)	-40°C ... 80°C	-40°C ... 80°C	-40°C ... 80°C
Degree of protection	IP65	IP65	IP65
Gain	5 dBi	8.5 dBi	12.15 dBi
Impedance	50 Ω	50 Ω	50 Ω
Connection method	N (female) with cable (0.6 m)	N (female) with cable (0.6 m)	N (female) with cable (0.6 m)
Horizontal / vertical apex angle	168 ° / 78 °	100 ° / 62 °	56 ° / 46 °
Dimensions W / H	6 cm / 17 cm	60.5 mm / 172 mm	60.5 mm / 172 mm
Frequency range	900 MHz	868 MHz ... 960 MHz	868 MHz ... 960 MHz
Scope of delivery	incl. mounting material	incl. mounting material	incl. mounting material

	Ordering data			Ordering data		
Description	Type	Order No.	Pcs./Pkt.	Type	Order No.	Pcs./Pkt.
Directional wireless antenna						
	RAD-ISM-900-ANT-YAGI-3-N	2867801	1	**RAD-ISM-900-ANT-YAGI-6.5-N**	2867814	1
				RAD-ISM-900-ANT-YAGI-10-N	5606614	1

Antenna cable

– Various cables for connection of different antennas
– Frequency range: 300 MHz ... 6 GHz

Antenna adapter cable, N (male) -> RSMA (male)

Technical data

General data	
Ambient temperature range	-40°C ... 85°C
Impedance	50 Ω

Ordering data

Description	Type	Order No.	Pcs./Pkt.
Antenna adapter cable			
0.5 m long	**RAD-PIG-RSMA/N-0.5**	2903263	1
1 m long	**RAD-PIG-RSMA/N-1**	2903264	1
2 m long	**RAD-PIG-RSMA/N-2**	2903265	1
3 m long	**RAD-PIG-RSMA/N-3**	2903266	1
5 m long	**RAD-PIG-RSMA/N-5**	2702140	1

Antenna cable

– Various cables for connection of different antennas
– Frequency range: 300 MHz ... 6 GHz

Technical data

General data	
Ambient temperature range	-40°C ... 75°C
Impedance	50 Ω

Ordering data

Description	Type	Order No.	Pcs./Pkt.
Antenna adapter cable			
1.2 m long, MCX (male) -> N (female)	**RAD-CON-MCX-N-SB**	2867717	1
1.2 m long, 90° MCX (male) -> N (male)	**RAD-CON-MCX90-N-SS**	2885207	1
1.2 m long, SMA (male) -> N (female)	**RAD-CON-SMA-N-SS**	2867403	1

Extension cable

– Various cables to extend the distance between the wireless module and antenna

Antenna extension cable, N (male)

	Technical data
General data	
Ambient temperature range	-40°C ... 85°C
Impedance	50 Ω

Description	Type	Order No.	Pcs./Pkt.
Antenna extension cable, N connection at both ends (male)			
3 m long, attenuation (at 900 MHz) 0.96 dB	**RAD-CAB-PFP240-10**	5606124	1
6 m long, attenuation (at 900 MHz) 0.98 dB	**RAD-CAB-PFP400-20**	5606125	1
7.5 m long, attenuation (at 900 MHz) 1 dB	**RAD-CAB-PFP500-25**	5606126	1
12 m long, attenuation (at 900 MHz) 0.25 dB/m	**RAD-CAB-RG213-40**	2867377	1
15 m long, attenuation (at 900 MHz) 0.25 dB/m	**RAD-CAB-RG213-50**	2867225	1
18 m long, attenuation (at 900 MHz) 0.13 dB/m	**RAD-CAB-PFP400-60**	2867380	1
24 m long, attenuation (at 900 MHz) 0.13 dB/m	**RAD-CAB-PFP400-80**	2867393	1
30 m long, attenuation (at 900 MHz) 0.13 dB/m	**RAD-CAB-PFP400-100**	2867238	1
45 m long, attenuation (at 900 MHz) 0.08 dB/m	**RAD-CAB-PFP600-150**	2885184	1

Simplified antenna connection

– All wireless modules with an RSMA connection are connected directly to the N connection of the antennas via a cable
– Various cable lengths between 50 cm and 5 m are available

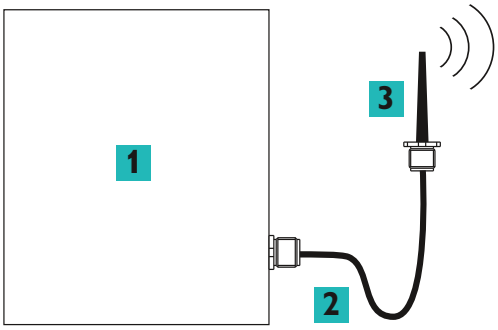

1 Wireless module
2 Adapter cable
3 Antenna

Installation in the Ex area

The antenna barrier makes the high-frequency outputs of wireless modules intrinsically safe in accordance with Ex i protection. It limits the ignition energy in the event of an error.

The antenna barrier is installed in an IP54 control box in zone 2 or in the safe area. This makes it possible to use standard antennas in potentially explosive areas up to zone 0.

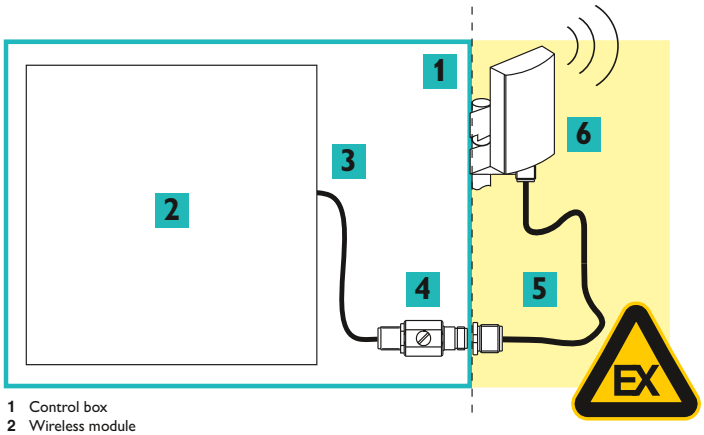

1 Control box
2 Wireless module
3 Adapter cable
4 Antenna barrier
5 Antenna cable
6 Antenna

PHOENIX CONTACT
mGuard
P1 Stat Mod Info2
P2 Err Fault Info1
WAN 1
DMZ
LAN 1
LAN 4
LAN 2
LAN 3
ANT
Configuration
SIM 1
SIM 2
GPS
US
ERR
CON
Micro SD
Micro SD
LAN 1
SIM
TC ROUTER
DI1 DI2 DI3 DI4 - +
SIM
Network
Device
Digital IN 1 2 3 4
Relay OUT
ISB
SIM
TC MOBILE
U1 I1 I1 U2 I2 I2 O1 UB1 O2 O3 UB2 O4

Industrial communication technology – Remote communication

Do you want to communicate with your machines and systems on a worldwide basis? From efficient remote maintenance and continuous data transmission for remote control technology through to automatic early warning messages: Phoenix Contact offers a comprehensive portfolio for industrial remote communication.

Alerts

– Reduced machine and system downtimes, thanks to automatic alerts via SMS and e-mail
– Decreased communication costs, thanks to event-driven alerts

Remote maintenance

– VPN infrastructure with IPsec (Internet Protocol Security) for operators, machine builders, and system manufacturers
– Secure and reliable, thanks to industry-proven mGuard security technology
– Compatible with all mGuard security appliances and certified VPN clients
– Cloud-based remote maintenance with the mGuard Secure Cloud

Remote control

Are you looking to connect remote stations to your control center over great distances? We offer the right transmission path for every remote control application – whether using mobile networks or copper-based solutions.

– Wide range of transmission solutions for industrial communication from a single source
– Flexible selection based on economic or technical aspects

Product overview	**400**
Alerts	
Remote signaling and remote control system	**402**
Remote maintenance	
mGuard security routers	**404**
Cloud client	**406**
mGuard Secure Cloud	**408**
ADSL broadband router and analog modem	**410**
Remote control	
Mobile routers	**412**
Serial quad band modem	**414**
Antennas and surge protection	**415**
Protocol converter	**416**

Product overview

Alerts

Remote signaling and remote control system, 2G mobile network
Page 402

Remote signaling and remote control system, 4G mobile network
Page 403

COMPLETE line

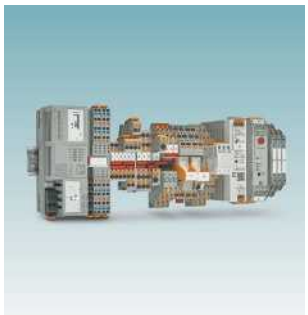

The comprehensive solution for your control cabinet: Easy planning, intuitive installation
Page 522

Remote maintenance

mGuard security router, mobile network
Page 404

mGuard security router, Ethernet
Page 334

mGuard security routers for mounting without a DIN rail
Page 340

Remote maintenance

Cloud client, mobile network, LAN
Page 406

mGuard Secure Cloud
Page 408

DSL broadband router for the public telephone network
Page 410

Analog modem for the public telephone network
Page 411

Remote control

Mobile routers
Page 412

Serial quad band modem for GPRS and GSM
Page 414

Protocol converter
Page 416

Extenders

Managed Ethernet extender
Page 349

Unmanaged Ethernet extender
Page 349

Serial extender, PROFIBUS extender
Page 428

Accessories

Mobile communication antennas
Page 415

Surge protection
Page 415

Media converters

Universal media converters for conversion to fiber optics
Page 350

Media converters for real-time protocols and IEC 61850 environments
Page 352

Industrial Wireless

Radioline wireless modules and I/O extension modules
Page 369

Wireless multiplexer with antennas
Page 386

WirelessHART, gateway and adapter
Page 384

Remote signaling and remote control system

Alerts and remote control via the mobile network

Use the mobile network, monitor analog and digital values, and switch relays remotely using the TC Mobile I/O product range.

Depending on the product version, data is transmitted via SMS, e-mail or ODP protocol (GPRS).

Thanks to the large voltage range and the different inputs, the signaling system is suitable for use in a wide range of applications.

Features:

- Event-driven or continuous communication
- 4 digital inputs
- DC version: 2 analog inputs (current/voltage)
- 4 relay outputs, can be switched via mobile communication
- SMS alerts in the event of voltage failure
- Configuration via USB and web browser
- Standard SIM card
- Compact design also for domestic installations (4 HP, DIN 43880)
- Cover can be sealed
- Numerous helpful software functions

Applications:

- Machine, building, and system monitoring
- Pumps, sewage treatment plants, water supply
- Light controllers, remote switching systems
- Elevators, doors
- Alarm and domestic engineering
- Climate and ventilation engineering
- Battery monitoring up to 60 V
- Railway applications in accordance with EN 50121-4

TC Mobile I/O app

Switch your outputs conveniently using the app. This means you can check the status of your device at any time. The TC Mobile I/O app makes handling the SMS version even easier. The alerts are sent as usual via SMS and e-mail. This makes it easy to be contacted in the field.

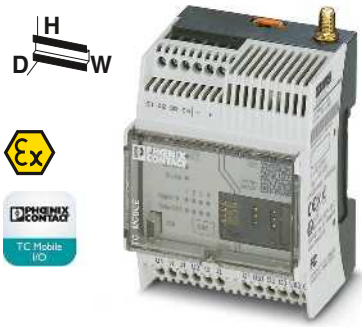

Communication via SMS and e-mail, 2G mobile network (GSM/GPRS)

Ex: Ⓔx

Technical data

		TC MOBILE I/O X200	TC MOBILE I/O X200 AC
Supply			
Supply voltage range		10 V DC ... 60 V DC	93 V AC ... 250 V AC (47.5 Hz ... 63 Hz)
Nominal current consumption		50 mA (24 V DC)	15 mA (230 V AC)
Max. current consumption		80 mA	25 mA
USB interface		USB 2.0	
Connection method		Mini-USB type B, 5-pos.	
Transmission distance		≤ 3 m (only for configuration and diagnostics)	
Mobile communication			
Frequencies		850 MHz (2 W (EGSM)) 900 MHz (2 W (EGSM)) 1800 MHz (1 W (EGSM)) 1900 MHz (1 W (EGSM))	
Digital input			
Number of inputs		4	
Analog input			
Number of inputs		2	-
Signal range		0 V DC ... 60 V DC / 0 mA ... 20 mA / 4 mA ... 20 mA (configurable)	-
Resolution		15 bit	-
Accuracy		± 0.1%	-
Switching output			
Contact type		4 x N/O contact	
Max. switching voltage		250 V AC	
Limiting continuous current		6 A AC	5 A
General data			
Dimensions	W / H / D	72 mm / 90 mm / 62 mm	
Ambient temperature (operation)		-25°C ... 70°C (for derating, see technical documentation)	
Approvals for countries		EU, other countries in preparation	
Electromagnetic compatibility		Conformance with EMC Directive 2014/30/EU	
ATEX		Ⓔx II 3 G Ex nA nC IIC T4 Gc X	
EMC note		Class A product, see page 527	

Ordering data

Description	Type	Order No.	Pcs./Pkt.
Compact signaling system, for mobile networks, monitors inputs, switches relay outputs			
- Analog and digital inputs	**TC MOBILE I/O X200**	2903805	1
- Digital inputs	**TC MOBILE I/O X200 AC**	2903806	1

Accessories

Description	Type	Order No.	Pcs./Pkt.
Multiband mobile communication antenna, with mounting bracket for outdoor installation, 5 m antenna cable with SMA circular connector, dimensions: 82 mm x 48 mm	**TC ANT MOBILE WALL 5M**	2702273	1
Multiband antenna for UMTS and quad band GSM, with omnidirectional characteristic, 2 m antenna cable with SMA circular connector, degree of protection: IP65, dimensions: 76 x 20 mm	**PSI-GSM/UMTS-QB-ANT**	2313371	1
Mobile communication antenna, for direct assembly on the device, SMA circular connector with articulated joint	**PSI-GSM-STUB-ANT**	2313342	1
Power supply, primary-switched	**STEP-PS/ 1AC/24DC/0.75**	2868635	1
USB connecting cable (individual) for configuration	**CABLE-USB/MINI-USB-3,0M**	2986135	1
Surge protection for UMTS and quad-band GSM antenna, with SMA plug and SMA coupling	**CSMA-LAMBDA/4-2.0-BS-SET**	2800491	1
Antenna extension cable for UMTS and quad-band GSM, with SMA plug and SMA coupling			
5 m long	**PSI-CAB-GSM/UMTS- 5M**	2900980	1
10 m long	**PSI-CAB-GSM/UMTS-10M**	2900981	1

Communication via ODP protocol, 2G mobile network (GSM/GPRS)

new

Communication via SMS and e-mail, 4G mobile network (LTE)

Ex:

Technical data

TC MOBILE I/O X300	TC MOBILE I/O X300 AC
10 V DC ... 60 V DC	93 V AC ... 250 V AC (47.5 Hz ... 63 Hz)
140 mA (24 V DC)	40 mA (230 V AC)
180 mA	60 mA
USB 2.0	
Mini-USB type B, 5-pos. ≤ 3 m (only for configuration and diagnostics)	
850 MHz (2 W (EGSM)) 900 MHz (2 W (EGSM)) 1800 MHz (1 W (EGSM)) 1900 MHz (1 W (EGSM))	
4	
2	-
0 V DC ... 60 V DC / 0 mA ... 20 mA / 4 mA ... 20 mA (configurable)	-
15 bit	-
± 0.1%	-
4 x N/O contact 250 V AC	
6 A AC	5 A
72 mm / 90 mm / 62 mm	
-25°C ... 70°C (for derating, see technical documentation)	
EU, other countries in preparation Conformance with EMC Directive 2014/30/EU II 3 G Ex nA nC IIC T4 Gc X	
Class A product, see page 527	

Technical data

TC MOBILE I/O X200-4G	TC MOBILE I/O X200-4G AC
10 V DC ... 60 V DC	93 V AC ... 250 V AC (47.5 Hz ... 63 Hz)
50 mA (24 V DC)	15 mA (230 V AC)
80 mA	25 mA
USB 2.0	
Mini-USB type B, 5-pos. ≤ 3 m (only for configuration and diagnostics)	
850 MHz (2 W (EGSM)) 900 MHz (2 W (EGSM)) 1800 MHz (1 W (EGSM)) 1900 MHz (1 W (EGSM)) 800 MHz (LTE B20) 1800 MHz (LTE B3) 2600 MHz (LTE B7)	
4	
2	-
0 V DC ... 60 V DC / 0 mA ... 20 mA / 4 mA ... 20 mA (configurable)	-
15 bit	-
± 0.1%	-
4 x N/O contact 250 V AC	
6 A	5 A
72 mm / 90 mm / 62 mm	
-25°C ... 70°C (for derating, see technical documentation)	
EU, other countries in preparation Conformance with RED Directive 2014/53/EU	

Ordering data

Type	Order No.	Pcs./Pkt.
TC MOBILE I/O X300	2903807	1
TC MOBILE I/O X300 AC	2903808	1

Accessories

TC ANT MOBILE WALL 5M	2702273	1
PSI-GSM/UMTS-QB-ANT	2313371	1
PSI-GSM-STUB-ANT	2313342	1
STEP-PS/ 1AC/24DC/0.75	2868635	1
CABLE-USB/MINI-USB-3,0M	2986135	1
CSMA-LAMBDA/4-2.0-BS-SET	2800491	1
PSI-CAB-GSM/UMTS- 5M	2900980	1
PSI-CAB-GSM/UMTS-10M	2900981	1

Ordering data

Type	Order No.	Pcs./Pkt.
TC MOBILE I/O X200-4G	1038567	1
TC MOBILE I/O X200-4G AC	1038568	1

Accessories

TC ANT MOBILE WALL 5M	2702273	1
STEP-PS/ 1AC/24DC/0.75	2868635	1
CABLE-USB/MINI-USB-3,0M	2986135	1
CSMA-LAMBDA/4-2.0-BS-SET	2800491	1
PSI-CAB-GSM/UMTS- 5M	2900980	1
PSI-CAB-GSM/UMTS-10M	2900981	1

mGuard security routers

The **TC MGUARD...** security appliances are industrial mobile routers with mGuard technology. As such, the routers offer a remote maintenance infrastructure for the secure connection of machines and systems via the Internet.

A high-speed mobile network interface and a 4-port switch are integrated into a compact metal housing. Secure remote communication on a global scale takes place via 4G LTE as well as UMTS and CDMA networks.

With the help of an SD card as a configuration memory, the devices can be quickly and easily started up or replaced. The devices have a buffered real-time clock and Trusted Platform Module (TPM) for secure key generation and management.

The **TC MGUARD RS4000...** devices provide high-availability high-end security for industry. The integrated 4-port switch offers management features and supports EtherNet/IP™.

The **TC MGUARD RS2000...** devices are designed for applications with fewer complex requirements for secure remote maintenance. The integrated 4-port switch saves valuable space on the DIN rail.

Serial device server included

The integrated COMSERVER function is used to integrate serial RS-232 interfaces into Ethernet networks. This provides an easy way of implementing functions such as cable replacement or network integration.

Device Manager

The Device Manager simplifies the management of mGuard security appliances. The tool features a template mechanism that enables the user to configure and manage all mGuard devices centrally.

Notes:

Central device management software, the Device Manager for FL MGUARD devices, can be found on page 342

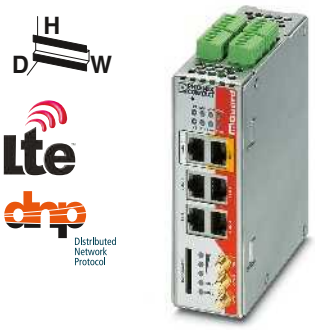

With firewall and VPN, managed 4-port switch, DMZ port, and 2nd WAN interface

Technical data

	TC MGUARD RS4000 4G VPN	TC MGUARD RS4000 3G VPN
Supply		
Supply voltage range	11 V DC ... 36 V DC (via COMBICON plug-in screw terminal block)	
Nominal current consumption	< 320 mA (24 V DC)	
Ethernet interface		
Connection method	RJ45	
Transmission speed	10/100 Mbps (auto negotiation)	
Transmission distance	100 m (shielded twisted pair)	
Functions		
Management	Web-based management, SNMP	
Basic functions	Router with intelligent firewall and VPN for 10 tunnels (up to 250 supported with optional additional license), CIFS Integrity Monitoring (as an option), metal housing, slot for SD memory card	
Security functions		
Number of VPN tunnels	10 (up to 250 tunnels with additional license as an option)	
Encryption methods	DES, 3DES, AES-128, -192, -256	
Internet Protocol Security (IPsec) mode	ESP tunnel / ESP transport	
Authentication	X.509v3 certificates with RSA or PSK	
Firewall rules	Configurable stateful inspection firewall with full scope of functions	
Routing	Standard routing, NAT, 1:1-NAT, port forwarding	
Mobile communication		
Frequencies	850 MHz (2 W (EGSM)) 900 MHz (2 W (EGSM)) 1800 MHz (1 W (EGSM)) 1900 MHz (1 W (EGSM)) 850 MHz (UMTS/HSPA B5) 900 MHz (UMTS/HSPA B8) 1900 MHz (UMTS/HSPA B2) 2100 MHz (UMTS/HSPA B1) 800 MHz (LTE B20) 850 MHz (LTE B5) 900 MHz (LTE B8) 1700 MHz (LTE B4) 1800 MHz (LTE B3) 1900 MHz (LTE B2) 2100 MHz (LTE B1) 2600 MHz (LTE B7)	850 MHz (2 W (EGSM)) 900 MHz (2 W (EGSM)) 1800 MHz (1 W (EGSM)) 1900 MHz (1 W (EGSM)) 800 MHz (UMTS/HSPA B6) 850 MHz (UMTS/HSPA B5) 900 MHz (UMTS/HSPA B8) 1900 MHz (UMTS/HSPA B2) 2100 MHz (UMTS/HSPA B1) 800 MHz (CDMA2000 EV-DO) 1900 MHz (CDMA2000 EV-DO)
SIM interface	1.8 volt, 3 volt	
GPRS compatibility	Class 12, Class B	
Network check	LED bar graph to display receive quality	
Antenna connection	50 Ω impedance SMA antenna socket	
Digital input		
Number of inputs	3	
Signal range	10 V DC ... 30 V DC / 5 mA	
Digital output		
Number of outputs	3	
Signal range	10 V DC ... 30 V DC (depending on the operating voltage) ≤ 125 mA (short-circuit-proof)	
General data		
Dimensions W / H / D	45 mm / 130 mm / 114 mm	
Ambient temperature (operation)	-40°C ... 60°C	
Electrical isolation	VCC // PE	
Test voltage	1 kV (50 Hz, 1 min.)	
EMC note	Class A product, see page 527	

Ordering data

Description	Type	Order No.	Pcs./Pkt.
Mobile router with mGuard technology			
- UMTS/HSPA	**TC MGUARD RS4000 3G VPN**	2903440	1
- 4G LTE (European version)	**TC MGUARD RS4000 4G VPN**	2903586	1
- 4G LTE (US version, AT&T)			
- 4G LTE (US version, Verizon)			

With firewall and VPN, integrated 4-port switch

Ex:

Technical data

TC MGUARD RS2000 4G VPN	TC MGUARD RS2000 3G VPN
11 V DC ... 36 V DC (via COMBICON plug-in screw terminal block)	
< 320 mA (24 V DC)	
RJ45 10/100 Mbps (auto negotiation) 100 m (shielded twisted pair)	
Web-based management, SNMP Router with simplified 2-click firewall and VPN for 2 tunnels (fixed), metal housing, slot for any SD memory card	
2 (fixed, IPsec (IETF standard))	
DES, 3DES, AES-128, -192, -256 ESP tunnel / ESP transport X.509v3 certificates with RSA or PSK Simplified 2-click stateful inspection firewall	
Standard routing, NAT, 1:1-NAT, port forwarding	
850 MHz (2 W (EGSM)) 900 MHz (2 W (EGSM)) 1800 MHz (1 W (EGSM)) 1900 MHz (1 W (EGSM)) 850 MHz (UMTS/HSPA B5) 900 MHz (UMTS/HSPA B8) 1900 MHz (UMTS/HSPA B2) 2100 MHz (UMTS/HSPA B1) 800 MHz (LTE B20) 850 MHz (LTE B5) 900 MHz (LTE B8) 1700 MHz (LTE B4) 1800 MHz (LTE B3) 1900 MHz (LTE B2) 2100 MHz (LTE B1) 2600 MHz (LTE B7)	850 MHz (2 W (EGSM)) 900 MHz (2 W (EGSM)) 1800 MHz (1 W (EGSM)) 1900 MHz (1 W (EGSM)) 800 MHz (UMTS/HSPA B6) 850 MHz (UMTS/HSPA B5) 900 MHz (UMTS/HSPA B8) 1900 MHz (UMTS/HSPA B2) 2100 MHz (UMTS/HSPA B1) 800 MHz (CDMA2000 EV-DO) 1900 MHz (CDMA2000 EV-DO)
1.8 volt, 3 volt Class 12, Class B LED bar graph to display receive quality 50 Ω impedance SMA antenna socket	
3 10 V DC ... 30 V DC / 5 mA	
3 10 V DC ... 30 V DC (depending on the operating voltage) ≤ 125 mA (short-circuit-proof)	
45 mm / 130 mm / 114 mm -40°C ... 60°C VCC // PE 1 kV (50 Hz, 1 min.)	
Class A product, see page 527	

Ordering data

Type	Order No.	Pcs./Pkt.
TC MGUARD RS2000 3G VPN	2903441	1
TC MGUARD RS2000 4G VPN	2903588	1

new

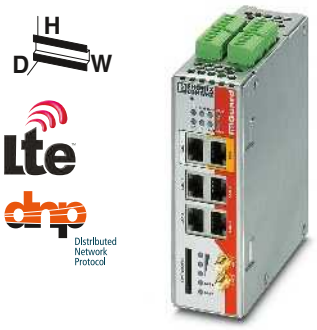

With firewall and VPN, managed 4-port switch, DMZ port, and 2nd WAN interface (US version)

Ex:

Technical data

TC MGUARD RS4000 4G ATT VPN	TC MGUARD RS4000 4G VZW VPN
11 V DC ... 36 V DC (via COMBICON plug-in screw terminal block)	
< 320 mA (24 V DC)	
RJ45 10/100 Mbps (auto negotiation) 100 m (shielded twisted pair)	
Web-based management, SNMP Router with intelligent firewall and VPN for 10 tunnels (up to 250 supported with optional additional license), CIFS Integrity Monitoring (as an option), metal housing, slot for SD memory card	
10 (up to 250 tunnels with additional license as an option)	
DES, 3DES, AES-128, -192, -256 ESP tunnel / ESP transport X.509v3 certificates with RSA or PSK Configurable stateful inspection firewall with full scope of functions	
Standard routing, NAT, 1:1-NAT, port forwarding	
850 MHz (UMTS/HSPA B5) 1900 MHz (UMTS/HSPA B2) 700 MHz (LTE B13 / B17) 850 MHz (LTE B5) 1700 MHz (LTE B4) 1900 MHz (LTE B2)	700 MHz (LTE B13) 1700 MHz (LTE B4)
1.8 volt, 3 volt	
50 Ω impedance SMA antenna socket	
3 10 V DC ... 30 V DC / 5 mA	
3 10 V DC ... 30 V DC (depending on the operating voltage) ≤ 125 mA (short-circuit-proof)	
45 mm / 130 mm / 114 mm -40°C ... 60°C VCC // PE 1 kV (50 Hz, 1 min., manufacturer's declaration)	
Class A product, see page 527	

Ordering data

Type	Order No.	Pcs./Pkt.
TC MGUARD RS4000 4G ATT VPN	1010463	1
TC MGUARD RS4000 4G VZW VPN	1010461	1

new

With firewall and VPN, integrated 4-port switch (US version)

Ex:

Technical data

TC MGUARD RS2000 4G ATT VPN	TC MGUARD RS2000 4G VZW VPN
11 V DC ... 36 V DC (via COMBICON plug-in screw terminal block)	
< 320 mA (24 V DC)	
RJ45 10/100 Mbps (auto negotiation) 100 m (shielded twisted pair)	
Web-based management, SNMP Router with simplified 2-click firewall and VPN for 2 tunnels (fixed), metal housing, slot for any SD memory card	
2 (fixed, IPsec (IETF standard))	
DES, 3DES, AES-128, -192, -256 ESP tunnel / ESP transport X.509v3 certificates with RSA or PSK Simplified 2-click stateful inspection firewall	
Standard routing, NAT, 1:1-NAT, port forwarding	
850 MHz (UMTS/HSPA B5) 1900 MHz (UMTS/HSPA B2) 700 MHz (LTE B13 / B17) 850 MHz (LTE B5) 1700 MHz (LTE B4) 1900 MHz (LTE B2)	700 MHz (LTE B13) 1700 MHz (LTE B4)
1.8 volt, 3 volt	
50 Ω impedance SMA antenna socket	
3 10 V DC ... 30 V DC / 5 mA	
3 10 V DC ... 30 V DC (depending on the operating voltage) ≤ 125 mA (short-circuit-proof)	
45 mm / 130 mm / 114 mm -40°C ... 60°C VCC // PE 1 kV (50 Hz, 1 min., manufacturer's declaration)	
Class A product, see page 527	

Ordering data

Type	Order No.	Pcs./Pkt.
TC MGUARD RS2000 4G ATT VPN	1010464	1
TC MGUARD RS2000 4G VZW VPN	1010462	1

TC CLOUD CLIENT via LAN and mobile network

The **TC CLOUD CLIENT** is positioned as a cost-effective field device for secure remote maintenance. The devices enable access to the mGuard Secure Cloud via the operator network or 4G mobile network.

The devices are optimized for use with the mGuard Secure Cloud. All **TC CLOUD CLIENT** devices therefore support Virtual Private Networks (VPNs) as standard. Even the scope of firmware functions is reduced to the essentials. This enables fast device startup in the field and error-free, autonomous operation.

mGuard Secure Cloud

mGuard Secure Cloud constitutes a high-performance and scalable VPN infrastructure in the cloud, which connects service staff with machines and systems via the Internet.

The Basic Edition, available free of charge, enables one concurrent service connection.

The Premium Edition enables multiple concurrent service connections. Unlimited users and machines can be created and the cloud can be adapted to include extensions.

Features:

- Turnkey VPN infrastructure for operators, machine builders, and systems manufacturers
- Secure and reliable, thanks to industry-proven mGuard security technology
- Multiple access to various customers and systems possible
- Compatible with all mGuard security appliances and certified VPN clients
- Cloud-based VPN infrastructure from Phoenix Contact
- Support for mobile, iOS-based devices, such as Apple iPads and iPhones

Cloud client for access via operator networks

Ex:

Technical data

Supply		
Supply voltage range		10 V DC ... 30 V DC (SELV, via COMBICON plug-in screw terminal block)
Nominal current consumption		< 200 mA (24 V DC)
Stand-by current consumption		-
Ethernet interface		
Number of ports		2 (SELV)
Connection method		RJ45 socket, shielded
Transmission speed		10/100 Mbps, auto negotiation
Transmission distance		100 m (shielded twisted pair)
Supported protocols		TCP/IP, UDP/IP, FTP, HTTP
Auxiliary protocols		ARP, DHCP, PING (ICMP), SNMP V1, SMTP
Functions		
Management		Web-based management, SNMP
Security functions		
Number of VPN tunnels		1
Mobile communication		
Frequencies		-
SIM interface		-
Antenna connection		-
Digital input		
Number of inputs		1
Signal range		10 V DC ... 30 V DC
Digital output		
Number of outputs		1
Signal range		10 V DC ... 30 V DC (depending on the operating voltage) ≤ 50 mA (not short-circuit proof)
General data		
Dimensions	W / H / D	45 mm / 130 mm / 126 mm
Degree of protection		IP20
Ambient temperature (operation)		0°C ... 60°C
Electrical isolation		VCC // FE // Ethernet
EMC note		

Ordering data

Description	Type	Order No.	Pcs./Pkt.
Cloud client			
	TC CLOUD CLIENT 1002-TX/TX	2702885	1

Accessories

Multiband mobile communication antenna, with mounting bracket for outdoor installation, 5 m antenna cable with SMA circular connector, dimensions: 82 mm x 48 mm			
Power supply, primary-switched	**TRIO-PS-2G/1AC/24DC/3/C2LPS**	2903147	1

Cloud client for access via 4G LTE mobile network (European version)

Technical data
10 V DC ... 30 V DC (SELV, via COMBICON plug-in screw terminal block) < 200 mA (24 V DC) -
2 RJ45 socket, shielded 10/100 Mbps, auto negotiation 100 m (shielded twisted pair) TCP/IP, UDP/IP, FTP, HTTP ARP, DHCP, PING (ICMP), SNMP V1, SMTP
Web-based management, SNMP
1
850 MHz (2 W (EGSM)) 900 MHz (2 W (EGSM)) 1800 MHz (1 W (EGSM)) 1900 MHz (1 W (EGSM)) 850 MHz (UMTS/HSPA B5) 900 MHz (UMTS/HSPA B8) 1900 MHz (UMTS/HSPA B2) 2100 MHz (UMTS/HSPA B1) 800 MHz (LTE B20) 850 MHz (LTE B5) 900 MHz (LTE B8) 1700 MHz (LTE B4) 1800 MHz (LTE B3) 1900 MHz (LTE B2) 2100 MHz (LTE B1) 2600 MHz (LTE B7)
1.8 volt, 3 volt 50 Ω impedance SMA antenna socket
1 10 V DC ... 30 V DC
1 10 V DC ... 30 V DC (depending on the operating voltage) ≤ 50 mA (not short-circuit proof)
45 mm / 130 mm / 126 mm IP20 0°C ... 60°C VCC // LTE // Ethernet // PE Class A product, see page 527

Ordering data

Type	Order No.	Pcs./Pkt.
TC CLOUD CLIENT 1002-4G	2702886	1

Accessories

TC ANT MOBILE WALL 5M	2702273	1
TRIO-PS-2G/1AC/24DC/3/C2LPS	2903147	1

Cloud client for access via 4G LTE mobile network (US version, Verizon)

Ex:

Technical data
10 V DC ... 30 V DC (SELV, via COMBICON plug-in screw terminal block) < 200 mA (24 V DC) 65 mA (with activated energy-saving mode)
2 (SELV) RJ45 socket, shielded 10/100 Mbps, auto negotiation 100 m (shielded twisted pair) TCP/IP, UDP/IP, FTP, HTTP ARP, DHCP, PING (ICMP), SNMP V1, SMTP
Web-based management, SNMP
1
700 MHz (LTE B13) 1700 MHz (LTE B4)
1.8 volt, 3 volt 50 Ω impedance SMA antenna socket
1 10 V DC ... 30 V DC
1 10 V DC ... 30 V DC (depending on the operating voltage) ≤ 50 mA (not short-circuit proof)
45 mm / 130 mm / 126 mm IP20 0°C ... 60°C VCC // LTE // Ethernet // PE Class A product, see page 527

Ordering data

Type	Order No.	Pcs./Pkt.
TC CLOUD CLIENT 1002-4G VZW	2702887	1

Accessories

TC ANT MOBILE WALL 5M	2702273	1
TRIO-PS-2G/1AC/24DC/3/C2LPS	2903147	1

Cloud client for access via 4G LTE mobile network (US version, AT&T)

Ex:

Technical data
10 V DC ... 30 V DC (SELV, via COMBICON plug-in screw terminal block) < 200 mA (24 V DC) 65 mA (with activated energy-saving mode)
2 RJ45 socket, shielded 10/100 Mbps, auto negotiation 100 m (shielded twisted pair) TCP/IP, UDP/IP, FTP, HTTP ARP, DHCP, PING (ICMP), SNMP V1, SMTP
Web-based management, SNMP
1
850 MHz (UMTS/HSPA B5) 1900 MHz (UMTS/HSPA B2) 700 MHz (LTE B13 / B17) 850 MHz (LTE B5) 1700 MHz (LTE B4) 1900 MHz (LTE B2)
1.8 volt, 3 volt 50 Ω impedance SMA antenna socket
1 10 V DC ... 30 V DC
1 10 V DC ... 30 V DC (depending on the operating voltage) ≤ 50 mA (not short-circuit proof)
45 mm / 130 mm / 126 mm IP20 0°C ... 60°C VCC // LTE // Ethernet // PE Class A product, see page 527

Ordering data

Type	Order No.	Pcs./Pkt.
TC CLOUD CLIENT 1002-4G ATT	2702888	1

Accessories

TC ANT MOBILE WALL 5M	2702273	1
TRIO-PS-2G/1AC/24DC/3/C2LPS	2903147	1

Remote maintenance via the cloud, encrypted and secure

Easy

mGuard Secure Cloud public offers a turnkey complete VPN solution for operators and companies that build machines and manufacture systems. Service personnel connect quickly and securely to machines, industrial PCs, and controllers via a simple web interface. In addition, secure remote maintenance can be performed at any location and any time without requiring specialist IT knowledge.

Secure

The cloud is based on the mGuard industry standard and connects service personnel and remote maintenance locations securely via the Internet. Virtual Private Networks (VPNs) are used here with the proven IPsec security protocol. This guarantees the confidentiality, authenticity, and integrity of all data transmitted between all devices connected via the mGuard Secure Cloud.

Furthermore, the mGuard Secure Cloud is operated in a high-availability computer center in Germany in accordance with the most stringent data protection standards.

Reliable

In order to stay competitive in the global market, companies must be able to handle increasing pressures in terms of innovation and cost. Particularly for small and medium-sized companies, it is practically impossible to run an efficient in-house operation with comparable infrastructure at a reasonable cost. The mGuard Secure Cloud therefore provides companies with a reliable VPN infrastructure via the Internet as a service that is tailored to their needs.

Your advantages

- Turnkey VPN infrastructure for operators, machine builders, and systems manufacturers
- Secure and reliable, thanks to industry-proven mGuard security technology
- Multiple access to various customers and systems possible
- Compatible with all mGuard security appliances and certified VPN clients
- Support for mobile, iOS-based devices, such as Apple iPads and iPhones

MGUARD SECURE CLOUD
Basic Edition

mGuard Secure Cloud constitutes a high-performance and scalable VPN infrastructure in the cloud, which connects service staff with machines and systems via the Internet. The Basic Edition, available free of charge, enables one concurrent service connection. However, unlimited users and machines can be created.

The full scope of services can be found at de.cloud.mguard.com

MGUARD SECURE CLOUD
Premium Edition

mGuard Secure Cloud constitutes a high-performance and scalable VPN infrastructure in the cloud, which connects service staff with machines and systems via the Internet. The Premium Edition enables multiple concurrent service connections. Unlimited users and machines can be created and the cloud can be adapted to include extensions.

The full scope of services can be found at de.cloud.mguard.com

MGUARD SECURE VPN CLIENT

The mGuard Secure VPN Client for Windows operating systems 10, 8.x, and 7 is used to connect PCs to a virtual private network (VPN). The client provides resources from remote networks securely and transparently. This connects the service engineer to the mGuard Secure Cloud.

The mGuard Secure VPN Client is available free of charge as a 30-day trial version. The license for a full version can be ordered under MGUARD SECURE VPN CLIENT LIC - 2702579.

TC CLOUD CLIENT – LAN

The TC CLOUD CLIENT TX/TX is positioned as a cost-effective field device for secure remote maintenance scenarios via the operator network.

The devices are optimized for use with the mGuard Secure Cloud. For this reason, all TC CLOUD CLIENT devices support Virtual Private Networks (VPNs) as standard.

A scope of functions optimized for the mGuard Secure Cloud enables quick startup of the devices in the field.

TC CLOUD CLIENT – Mobile network

The TC CLOUD CLIENT 4G product range offers cost-effective field devices for secure remote maintenance scenarios via the 4G LTE mobile network.

The devices are optimized for use with the mGuard Secure Cloud. For this reason, all TC CLOUD CLIENT devices support Virtual Private Networks (VPNs) as standard.

A scope of functions optimized for the mGuard Secure Cloud enables quick startup of the devices in the field.

MGUARD

The mGuard devices are suitable for distributed protection of production cells or individual machines against manipulation. For software-independent remote maintenance scenarios, you can use an mGuard as a VPN gateway for IPsec-encrypted VPN tunnels for the mGuard Secure Cloud. It serves as a remote maintenance infrastructure for the secure connection of machines and systems.

Remote maintenance via the public telephone network

Phoenix Contact offers analog modems for temporary remote access to your remote machines and systems. They facilitate remote maintenance in the most far-flung corners of the world by the simplest means possible, namely, dial-up connection technology.

Industrial ADSL broadband routers – Support for ADSL/ADSL2/ADSL2+ according to Annex A, B, and J

The analog telephone infrastructure enables the use of an ADSL broadband router. It connects industrial Ethernet or RS-232 devices to the Internet via a permanent DSL line. Via a high-speed Internet connection, you can access individual machines, systems or entire Ethernet networks anywhere in the world.

The DSL broadband routers are designed for worldwide and flexible use, there is no need for the application/provider requirements to be clarified in advance. This enables individual and fast startup on site.

One universal device type

– All common ADSL standards are supported (ADSL/ADSL2/ADSL2+)
– Integrated Annex A/B/J switchover

Note: the specifications for the standard and frequency range used (Annex) depend on the provider and are included in the access data sent by the provider.
– Annex A: DSL operation parallel to analog telephony (in most of the world)
– Annex B: DSL operation parallel to ISDN (in Germany and neighboring countries)
– Annex J: IP-based connections (ALL-IP connections of Deutsche Telekom)

Individual function selection between modem or router function

– DSL modem: converter from DSL to LAN – the router/firewall function is performed by a separate router, e.g., FL MGUARD
– DSL router: DSL modem plus integrated router functions, e.g., firewall, VPN, NAT, etc.

PSI-DATA/BASIC-MODEM/RS232

Dial-up line modem for remote maintenance of systems with an RS-232 interface
– Configurable, selective call acceptance
– High-quality electrical isolation
– Connection establishment with password protection
– Integrated surge protection
– Callback function

Supply	
Supply voltage range	
Nominal current consumption	
Stand-by current consumption	
RS-232 interface	
Connection method	
Transmission speed	
Ethernet interface	
Connection method	
Transmission speed	
Supported protocols	
Auxiliary protocols	
DSL interface	
Connection method	
Transmission speed	
Functions	
Management	
Security functions	
Number of VPN tunnels	
Firewall rules	
PSTN port (a/b line)	
Connection method	
Digital input	
Number of inputs	
Signal range	
Digital output	
Number of outputs	
Signal range	
General data	
Dimensions	W / H / D
Ambient temperature (operation)	
Electrical isolation	
Test voltage	
EMC note	

Description
Industrial ADSL broadband router, according to Annex A, B and J
Industrial analog modem, alarm input and output, scope of delivery: Modem, CD with configuration software, manual and RJ12/RJ12 cable

System power supply, primary-switched
DIN rail connector
DATATRAB, protective adapter for insertion in the data cable
DATATRAB adapter, protective adapter for insertion in the data cable

H D W

Ethernet

DSL

DSL router/modem with firewall

Technical data	
10 V DC ... 30 V DC (via COMBICON plug-in screw terminal block)	
< 150 mA (24 V DC) < 135 mA (stand by)	
- -	
8P8C RJ45 socket, shielded 10/100 Mbps, auto negotiation TCP/IP, UDP/IP, FTP, HTTP ARP, DHCP, PING (ICMP), SNMP V1, SMTP	
6P2C RJ11 socket, shielded COMBICON plug-in screw terminal block ≤ 25 Mbps (Annex A/B, downstream from Internet) ≤ 1 Mbps (Annex A/B, upstream to Internet) ≤ 25 Mbps (Annex J, downstream from Internet) ≤ 2.4 Mbps (Annex J, upstream to Internet)	
Web-based management	
- Stateful inspection firewall	
-	
- -	
-	
45 mm / 99 mm / 112 mm -20°C ... 60°C VCC//ADSL//Ethernet//FE 1.5 kV_{rms} (50 Hz, 1 min.) Class A product, see page 527	

Ordering data

Type	Order No.	Pcs./Pkt.
TC DSL ROUTER X400 A/B	2902709	1

Accessories

MINI-SYS-PS-100-240AC/24DC/1.5	2866983	1
DT-TELE-RJ45	2882925	1
DT-LAN-CAT.6+	2881007	1

H D W

Ethernet

DSL

DSL router/modem with firewall, VPN, serial device server, inputs/outputs

Technical data	
10 V DC ... 30 V DC (via COMBICON plug-in screw terminal block)	
< 150 mA (24 V DC) < 135 mA (stand by)	
D-SUB 9 plug 0.3; 1.2; 2.4; 4.8; 9.6; 19.2; 38.4; 57.6; 115.2 kbps	
8P8C RJ45 socket, shielded 10/100 Mbps, auto negotiation TCP/IP, UDP/IP, FTP, HTTP ARP, DHCP, PING (ICMP), SNMP V1, SMTP	
6P2C RJ11 socket, shielded COMBICON plug-in screw terminal block ≤ 25 Mbps (Annex A/B, downstream from Internet) ≤ 1 Mbps (Annex A/B, upstream to Internet) ≤ 25 Mbps (Annex J, downstream from Internet) ≤ 2.4 Mbps (Annex J, upstream to Internet)	
Web-based management	
3 Stateful inspection firewall	
-	
6 10 V DC ... 30 V DC / 5 mA	
4 10 V DC ... 30 V DC (depending on the operating voltage) ≤ 50 mA (short-circuit-proof)	
45 mm / 99 mm / 112 mm -20°C ... 60°C VCC + IO + RS-232//ADSL//Ethernet//FE 1.5 kV_{rms} (50 Hz, 1 min.) Class A product, see page 527	

Ordering data

Type	Order No.	Pcs./Pkt.
TC DSL ROUTER X500 A/B	2902710	1

Accessories

MINI-SYS-PS-100-240AC/24DC/1.5	2866983	1
DT-TELE-RJ45	2882925	1
DT-LAN-CAT.6+	2881007	1

H D W

RS-232

dnp Distributed Network Protocol

Modem for dial-up operation with RS-232 connection

Ex:

Technical data	
10 V DC ... 30 V DC (via COMBICON plug-in screw terminal block)	
< 100 mA (24 V DC) < 40 mA	
D-SUB 9 plug 0.3; 1.2; 2.4; 4.8; 9.6; 19.2; 38.4; 57.6; 115.2 kbps	
-	
- -	
-	
- -	
-	
- -	
-	
22.5 mm / 99 mm / 114.5 mm 0°C ... 55°C VCC // PSTN // RS-232 1.5 kV_{rms} (50 Hz, 1 min.) Class A product, see page 527	

Ordering data

Type	Order No.	Pcs./Pkt.
PSI-DATA/BASIC-MODEM/RS232	2313067	1

Accessories

MINI-SYS-PS-100-240AC/24DC/1.5	2866983	1
ME 22,5 TBUS 1,5/ 5-ST-3,81 GN	2707437	50

The **TC ROUTER** for mobile communication implements high-performance, high-speed data links of up to 150 Mbps via mobile 4G LTE networks. This enables you to establish a mobile broadband connection for highly flexible site networking even in places where a wired Internet connection is not available. These connections can be used to transmit sensitive data securely over mobile networks.

Furthermore, the **TC ROUTER** offers a high level of security thanks to IPsec or OpenVPN tunnels, as well as an integrated stateful packet inspection firewall. This means that you can reliably protect your application against unauthorized access.

The **TC ROUTER** transmits data quickly and securely between the control room and networks in the field and is ideal for the following areas:
– Public utilities
– Energy and water suppliers
– Operators that network and remotely maintain oil and gas fields

A low-priced 3G version is available for mid-level bandwidth requirements.

Features:
– Virtual permanent line to connect networks via the mobile network
– Stateful inspection firewall for dynamic filtering
– IPsec and OpenVPN
– Up to three VPN tunnels simultaneously
– Authentication with X.509 certificates and via pre-shared key (PSK)
– VPN remote start via call or SMS
– 1:1 NAT in the VPN
– Two switching inputs and one switching output
– Alerts sent via SMS or e-mail directly via the integrated switching input
– Configuration via web-based management or microSD card
– Two local Ethernet connections
– Integrated logbook
– Extended temperature range (-40°C ... +70°C)
– MIMO antennas
– Downward compatible within the mobile communications standard

Inputs and outputs

Two configurable switching inputs for the following functions:
– Sending an SMS, including to multiple recipients
– Sending an e-mail, including to multiple recipients
– Controlling an output at a remote station via SMS
– Restarting the router
– Starting or stopping a mobile data connection
– Switching the IPsec or OpenVPN connection
– Automatically loading a configuration from a microSD card
– Activating energy-saving mode

One configurable switching output, activated by:
– Activation by the input at a remote station
– SMS
– Web-based management
– Incoming call
– Connection abort
– Status of the mobile network connection
– Status of the mobile data connection
– Status of a VPN connection

Additional functions:

Slot for microSD card

You can use a microSD card to load the configuration to the device or permanently store log files.

Energy-saving mode

In energy-saving mode, the power consumption of the mobile router is reduced for battery-powered applications. You can configure the mode via the web interface and activate it via a switching input. When energy-saving mode is activated, the communication interfaces switch to standby mode. Data transmission is limited.

XML interface

The XML interface enables operation and diagnostics of devices from the local LAN. You can therefore query the status of the mobile network connection via Ethernet, for example, or send SMS messages and e-mails.

Supply	
Supply voltage range	
Nominal current consumption	
Stand-by current consumption	
Ethernet interface	
Number of ports	
Connection method	
Transmission speed	
Transmission distance	
Supported protocols	
Auxiliary protocols	
Functions	
Management	
Security functions	
Number of VPN tunnels	
Firewall rules	
Mobile communication	
Frequencies	
Digital input	
Number of inputs	
Signal range	
Digital output	
Number of outputs	
Signal range	
General data	
Dimensions	W / H / D
Degree of protection	
Ambient temperature (operation)	
Electrical isolation	
EMC note	

Description
Industrial LTE 4G router
- European version
- US version, Verizon
- US version, AT&T
Industrial 3G router
- European version

Multiband mobile communication antenna, with mounting bracket for outdoor installation, 5 m antenna cable with SMA circular connector, dimensions: 82 mm x 48 mm
Power supply, primary-switched

Ethernet

With firewall, NAT, and VPN, fallback to 3G (HMTS/HSPA), and 2G (GPRS/EDGE), European version

Ethernet

With firewall and NAT, fallback to 3G (HMTS/HSPA), and 2G (GPRS/EDGE), European version

Ethernet

With firewall, NAT, and VPN, US version

Ex:

Technical data

TC ROUTER 3002T-4G	TC ROUTER 3002T-3G
10 V DC ... 30 V DC (via COMBICON plug-in screw terminal block)	
< 200 mA (24 V DC) 65 mA (with activated energy-saving mode)	
2 RJ45 socket, shielded 10/100 Mbps, auto negotiation 100 m (shielded twisted pair) TCP/IP, UDP/IP, FTP, HTTP(S) ARP, DHCP, PING (ICMP), SNMP V1/V2, SMTP(S), NTP, SSL/TLS, STARTTLS	
Web-based management, SNMP	
3 Stateful inspection firewall	
850 MHz (2 W (EGSM)) 900 MHz (2 W (EGSM)) 1800 MHz (1 W (EGSM)) 1900 MHz (1 W (EGSM)) 850 MHz (UMTS/HSPA B5) 900 MHz (UMTS/HSPA B8) 1900 MHz (UMTS/HSPA B2) 2100 MHz (UMTS/HSPA B1) 800 MHz (LTE B20) 850 MHz (LTE B5) 900 MHz (LTE B8) 1700 MHz (LTE B4) 1800 MHz (LTE B3) 1900 MHz (LTE B2) 2100 MHz (LTE B1) 2600 MHz (LTE B7)	850 MHz (2 W (EGSM)) 900 MHz (2 W (EGSM)) 1800 MHz (1 W (EGSM)) 1900 MHz (1W (EGSM)) 900 MHz (UMTS/HSPA B8) 2100 MHz (UMTS/HSPA B1)
2 10 V DC ... 30 V DC	
1 10 V DC ... 30 V DC (depending on the operating voltage) ≤ 50 mA (not short-circuit proof)	
45 mm / 130 mm / 126 mm IP20	
-40°C ... 70°C (maximum transmission power 5 dBm) VCC // LTE // Ethernet // PE	-40°C ... 70°C (maximum transmission power 10 dBm) VCC // UMTS // Ethernet // PE
Class A product, see page 527	

Ordering data

Type	Order No.	Pcs./Pkt.
TC ROUTER 3002T-4G	2702528	1
TC ROUTER 3002T-3G	2702529	1

Accessories

TC ANT MOBILE WALL 5M	2702273	1
TRIO-PS-2G/1AC/24DC/3/C2LPS	2903147	1

Technical data

TC ROUTER 2002T-4G	TC ROUTER 2002T-3G
10 V DC ... 30 V DC (via COMBICON plug-in screw terminal block)	
< 200 mA (24 V DC) 65 mA (with activated energy-saving mode)	
2 RJ45 socket, shielded 10/100 Mbps, auto negotiation 100 m (shielded twisted pair) TCP/IP, UDP/IP, FTP, HTTP(S) ARP, DHCP, PING (ICMP), SNMP V1/V2, SMTP(S), NTP, SSL/TLS, STARTTLS	
Web-based management, SNMP	
- Stateful inspection firewall	
850 MHz (2 W (EGSM)) 900 MHz (2 W (EGSM)) 1800 MHz (1 W (EGSM)) 1900 MHz (1 W (EGSM)) 850 MHz (UMTS/HSPA B5) 900 MHz (UMTS/HSPA B8) 1900 MHz (UMTS/HSPA B2) 2100 MHz (UMTS/HSPA B1) 800 MHz (LTE B20) 850 MHz (LTE B5) 900 MHz (LTE B8) 1700 MHz (LTE B4) 1800 MHz (LTE B3) 1900 MHz (LTE B2) 2100 MHz (LTE B1) 2600 MHz (LTE B7)	850 MHz (2 W (EGSM)) 900 MHz (2 W (EGSM)) 1800 MHz (1 W (EGSM)) 1900 MHz (1W (EGSM)) 900 MHz (UMTS/HSPA B8) 2100 MHz (UMTS/HSPA B1)
2 10 V DC ... 30 V DC	
1 10 V DC ... 30 V DC (depending on the operating voltage) ≤ 50 mA (not short-circuit proof)	
45 mm / 130 mm / 126 mm IP20	
-40°C ... 70°C (maximum transmission power 5 dBm) VCC // LTE // Ethernet // PE	-40°C ... 70°C (maximum transmission power 10 dBm) VCC // UMTS // Ethernet // PE
Class A product, see page 527	

Ordering data

Type	Order No.	Pcs./Pkt.
TC ROUTER 2002T-4G	2702530	1
TC ROUTER 2002T-3G	2702531	1

Accessories

TC ANT MOBILE WALL 5M	2702273	1
TRIO-PS-2G/1AC/24DC/3/C2LPS	2903147	1

Technical data

TC ROUTER 3002T-4G VZW	TC ROUTER 3002T-4G ATT
10 V DC ... 30 V DC (SELV, via COMBICON plug-in screw terminal block)	
< 200 mA (24 V DC) 65 mA (with activated energy-saving mode)	
2 (SELV) RJ45 socket, shielded 10/100 Mbps, auto negotiation 100 m (shielded twisted pair) TCP/IP, UDP/IP, FTP, HTTP(S) ARP, DHCP, PING (ICMP), SNMP V1/V2, SMTP(S), NTP, SSL/TLS, STARTTLS	
Web-based management, SNMP	
3 Stateful inspection firewall	
700 MHz (LTE B13) 1700 MHz (LTE B4)	850 MHz (UMTS/HSPA B5) 1900 MHz (UMTS/HSPA B2) 700 MHz (LTE B13 / B17) 850 MHz (LTE B5) 1700 MHz (LTE B4) 1900 MHz (LTE B2)
2 10 V DC ... 30 V DC	
1 10 V DC ... 30 V DC (depending on the operating voltage) ≤ 50 mA (not short-circuit proof)	
45 mm / 130 mm / 126 mm IP20	
-40°C ... 70°C (maximum transmission power 5 dBm) VCC // LTE // Ethernet // PE	
Class A product, see page 527	

Ordering data

Type	Order No.	Pcs./Pkt.
TC ROUTER 3002T-4G VZW	2702532	1
TC ROUTER 3002T-4G ATT	2702533	1

Accessories

TC ANT MOBILE WALL 5M	2702273	1
TRIO-PS-2G/1AC/24DC/3/C2LPS	2903147	1

Serial quad band modem for GPRS and GSM

Send RS-232 data all around the world via the mobile network

Mobile network:
- GSM mobile networks: 850, 900, 1800, and 1900 MHz
- For worldwide use

GPRS TCP/IP connection:
- Connection established via IP addresses
- Client/server functionality
- IPT compatible
- Integrated TCP/IP stack for TCP and UDP connections
- Data rates of up to 53.6 kbps
- Security:
  - Firewall

GSM dial-up connection:
- Connection established via data phone number (CSD)
- Security:
  - Connection established with password protection
  - Selective call acceptance
  - Callback function

RS-232 interface:
- Freely parameterizable (baud rate, data bits, parity, stop bit, flow control)

Digital I/Os:
- Two digital switching inputs: Sending of freely configurable text messages (SMS, FAX, e-mail)
- One switching output on the backplane

Additional features:
- Encryption of SIM card PINs
- Can be used regardless of controller manufacturer
- High electromagnetic compatibility
- Galvanically isolated
- Convenient configuration software
- Configuration via SMS

With RS-232 interface, integrated TCP/IP stack, and 2 alarm inputs

Ex:

Technical data

Supply		
Supply voltage range		10 V DC ... 30 V DC (via COMBICON plug-in screw terminal block)
Supply voltage		24 V DC ±5% (as an alternative or redundant, via backplane bus contact and system power supply)
Nominal current consumption		< 350 mA (24 V DC)
Stand-by current consumption		< 80 mA (stand by)
RS-232 interface		
Connection method		D-SUB 9 plug
Data format/encoding		Serial asynchronous UART/NRZ, 7/8 data, 1/2 stop, 1 parity, 10/11-bit character length
Data flow control/protocols		Software handshake, Xon/Xoff or hardware handshake RTS/CTS
Transmission speed		1.2/2.4/9.6/19.2/38.4/57.6/115.2 kbps (can be set manually and automatically)
Mobile communication		
Frequencies		850 MHz (2 W (EGSM)) 900 MHz (2 W (EGSM)) 1800 MHz (1 W (EGSM)) 1900 MHz (1 W (EGSM))
SIM interface		1.8 volt, 3 volt
GPRS compatibility		Class 10, Class B
Network function		4 time slots for receiving data, 2 time slots for transmitting data. The PIN is saved in the modem. After a voltage interruption, there is automatic redialing into the network Integrated TCP/IP Stack, independent connection establishment.
Network check		LED to show data signal quality
Antenna connection		50 Ω impedance SMA antenna socket
Digital input		
Number of inputs		2
Signal range		9 V DC ... 60 V DC / 5 mA
Digital output		
Number of outputs		1
Signal range		10 V DC ... 30 V DC ≤ 80 mA (24 V)
General data		
Dimensions	W / H / D	22.5 mm / 99 mm / 118.6 mm
Ambient temperature (operation)		-25°C ... 60°C
Electrical isolation		VCC // RS-232 // GSM
Test voltage		1.5 kV (50 Hz, 1 min.)
Approvals for countries		EU, USA, Canada, other countries in preparation
EMC note		Class A product, see page 527

Ordering data

Description	Type	Order No.	Pcs./Pkt.
Industrial GPRS/GSM modem with RS-232 interface, scope of supply: Modem, CD with configuration software and user manual	**PSI-GPRS/GSM-MODEM/RS232-QB**	2313106	1

Accessories

Multiband mobile communication antenna, with omnidirectional characteristics, antenna cable with SMA male connector - 10 m antenna cable	**TC ANT MOBILE CABINET 10M**	1046361	1
System power supply, primary-switched	**MINI-SYS-PS-100-240AC/24DC/1.5**	2866983	1
DIN rail connector	**ME 22,5 TBUS 1,5/ 5-ST-3,81 GN**	2707437	50

Tested mobile communication antennas

Outdoor antenna
Wall or mast mounting

Control cabinet antenna

	Technical data	Technical data	
General data		TC ANT MOBILE CABINET 10M	PSI-GSM/UMTS-QB-ANT
Ambient temperature (operation)	-40°C ... 80°C	-40°C ... 85°C	-40°C ... 85°C
Gain	3 dBi (700 / 800 MHz) 4 dBi (900/1800 MHz) 5 dBi (1900 ... 2600 MHz)	typ. 2.2 dBi - -	5 dBi (800/900 MHz) 3 dBi (1800/1900 MHz) 1 dBi (2100 MHz)
Dimensions W / H	48 mm / 82 mm	77.4 mm / 15.9 mm	76 mm / 21 mm

Description	Ordering data Type	Order No.	Pcs./Pkt.	Ordering data Type	Order No.	Pcs./Pkt.
Multiband mobile communication antenna, with mounting bracket for outdoor installation, antenna cable with SMA connector						
- 5 m antenna cable	**TC ANT MOBILE WALL 5M**	2702273	1			
Multiband mobile communication antenna, with omnidirectional characteristics, antenna cable with SMA male connector						
- 10 m antenna cable				**TC ANT MOBILE CABINET 10M**	1046361	1
- 2 m antenna cable				**PSI-GSM/UMTS-QB-ANT**	2313371	1

Surge protection

Mobile communication surge protection

– For GSM networks with 850 MHz, 900 MHz, 1800 MHz, and 1900 MHz as well as UMTS networks

SHDSL surge protection

– For broadband communication devices

For GSM systems (0.8 GHz - 2.25 GHz), grounded shield, connection: SMA

Attachment plug for two VDSL interfaces (ports)

Description	Ordering data Type	Order No.	Pcs./Pkt.	Ordering data Type	Order No.	Pcs./Pkt.
Surge protection for UMTS and quad-band GSM antenna, with SMA plug and SMA coupling	**CSMA-LAMBDA/4-2.0-BS-SET**	2800491	1			
DATATRAB, protective adapter for insertion in the data cable				**DT-TELE-RJ45**	2882925	1

Protocol converter

The **RESYGATE 3000** protocol converter enables the process connection of remote control stations with different protocols to an IEC 60870-5-101 or IEC 60870-5-104-based control system.

The IEC 60870-5-104, IEC 60870-5-101, Modbus/RTU, and Modbus/TCP protocols are supported for the connection of remote control stations.

The individual protocols are parameterized and set via user-friendly interfaces in the configuration tool.

Features:

- Connection of existing IEC 60870-5-101 and/or Modbus remote control stations when upgrading the control system to the IEC 60870-5-104 protocol
- High availability of the overall system, thanks to redundant connection
- Conversion of the IEC 60870-5-104, IEC 60870-5-101, Modbus/RTU, and Modbus/TCP protocols to the IEC 60870-5-104 or IEC 60870-5-101 protocol
- Up to 18 serial end devices can be used depending on the protocols used

Technical data

Computer data		
Processor		Intel® Celeron® N2930 1.83 GHz/2.16 GHz
RAM (configuration option)		2 GB DDR3 SODIMM
Mass storage (configuration option)		CFast®, 4 GB
Interfaces		1x COM (RS-232/422/485) 2x COM (RS-232) 3x USB 2.0 1x USB 3.0
Slots		without slots
Monitor output		2x DisplayPort
Network		2x Ethernet (10/100/1000 Mbps), RJ45
Power supply unit		24 V DC ±20%
Supported remote control protocols		IEC 60870–5–101 Balanced Mode IEC 60870–5–101 Unbalanced Mode IEC 60870–5–104 Client IEC 60870–5–104 Server, max. 4 Client Modbus RTU Master Modbus TCP Master
General data		
Dimensions	W / H / D	162 mm / 146.2 mm / 49 mm
Degree of protection		IP20
Ambient temperature (operation)		-20°C ... 50°C
Permissible humidity (operation)		5% ... 95% (non-condensing)
Mounting type		DIN rail mounting
Vibration (operation)		DIN EN 60068-2-6
Shock		15g, 11 ms in accordance with IEC 60068-2-27
EMC note		Class A product, see page 527

Ordering data

Description	Type	Order No.	Pcs./Pkt.
Protocol converter - for a maximum of 4000 data points	**RESYGATE 3000**	**2400129**	1

PHOENIX CONTACT
PSI-MOS-PROFIB/FO 850 T
Ord.-No. 27 08 261
VCC
TD
RD
FO SIGNAL
ERR A
ERR B
PHOENIX CONTACT
PSI-REP-PROFIBUS/12MB
Ord.-No. 27 08 863
VCC
TD
RD
ERR A
Port A
ERR B
PHOENIX CONTACT
PSI-MODEM-SHDSL/SERIAL
Ord.-No. 23 13 669
1
2
3
4
5
6
DG
RD
TD
ERR
SERIAL
DSL B
LINK
STAT
PHOENIX CONTACT PSM-ME-RS485/RS485-P
Ord.-No.: 2744429
A
TD RD VCC
RS485
RS485
B

Industrial communication technology – Fieldbus communication

With so many applications out there, and the need to satisfy specific industry requirements, fieldbuses are up against some significant challenges. Influencing factors such as EMI, potential differences, large distances to cover, increasing numbers of devices, and rising data rates require a high-performance, flexible network. By choosing interface devices from Phoenix Contact, you will benefit from robust network installations in copper and FO versions.

Extenders and repeaters
- Higher level of performance, thanks to increased range and segmentation
- Flexible network extension, thanks to signal conditioning with repeaters
- Use any two-wire cables to increase the range with extenders

Converters and isolators
- Adapt, connect, disconnect, and protect interfaces

Installation technology
- Installation system adapted for devices in the control cabinet and for field devices with a high degree of protection

Modern process technologies
- HART, FOUNDATION Fieldbus, PROFIBUS PA, and I/O solutions for potentially explosive areas

Product overview	**420**
Copper transmission	
Repeaters	**422**
Active PROFIBUS termination	**424**
RS-232 interface converters	**425**
Extenders	**428**
Media converters	
FO converters:	
- For PROFIBUS	**430**
- For DeviceNet™, and CANopen®	**432**
- For RS-485 2-wire bus systems	**434**
- For INTERBUS, RS-422, and RS-485 4-wire bus systems	**436**
- For RS-232	**438**
Fiber optic cables, tools, and measuring devices	**440**
Installation technology	
PROFIBUS cable, tool, RS-485 connection distributor	**442**
D-SUB fast connection, M12	**444**
D-SUB fast connection for PROFIBUS	**446**
D-SUB fast connection for CANopen® and SafetyBUS p	**448**
D-SUB fast connection for Modbus, INTERBUS, RS-232, RS-422, RS-485	**450**
PROFIBUS PA / FOUNDATION Fieldbus / HART	
Field junction boxes	**452**
Device couplers for the field	**454**
Field diagnostic modules	**457**
Power supply	**458**
PROFIBUS DP/PA coupler	**460**
PROFIBUS PA I/O multiplexer	**461**
Modbus and HART gateways	**462**
Ethernet HART multiplexer	**463**
Industrial Ethernet	**285**
Industrial Wireless	**369**
Remote communication	**399**

Product overview

Extenders and repeaters

Repeaters for electrical isolation and increasing the range
Page 422

Serial extender, PROFIBUS extender
Page 428

Converters and isolators

Termination resistor for active bus termination
Page 424

Interface converters
Page 426

Media converters

FO converters for PROFIBUS
Page 430

FO converters for DeviceNet™ and CANopen®
Page 432

FO converters for RS-485 2-wire bus systems
Page 434

FO converters for INTERBUS
Page 436

Media converters

FO converters for RS-232
Page 438

FO accessories – FO cables, connectors, and tools
Page 440

Industrial Ethernet

Universal media converters for conversion to fiber optics
Page 350

Media converters for real-time protocols and IEC 61850 environments
Page 352

Industrial Ethernet

Serial device servers and protocol converters, multiport, for conversion to Ethernet
Page 354

Serial device servers, 1 port, for conversion to Ethernet
Page 357

PoE injectors for the common transmission of power and data
Page 345

Patch panels for various connection technologies
Page 362

Installation technology

Type A Fast Connect PROFIBUS cable and quick stripping tool
Page 442

M12 D-SUB fast connection for PROFIBUS and CANopen®
Page 444

D-SUB fast connection for PROFIBUS and CANopen®
Page 446

D-SUB fast connection for Modbus, INTERBUS, RS-232, RS-422, RS-485
Page 450

PROFIBUS PA / FOUNDATION Fieldbus

Field connection boxes in stainless steel
Page 453

Device couplers for the field
Page 454

Device couplers for the field, Ex zone 1 and 2
Page 456

Field diagnostic modules for FOUNDATION Fieldbus
Page 457

PROFIBUS PA / FOUNDATION Fieldbus

PROFIBUS PA I/O multiplexer
Page 461

Modbus gateways for PROFIBUS DP/PA and FOUNDATION Fieldbus
Page 462

HART gateways for PROFIBUS DP/PA and FOUNDATION Fieldbus
Page 462

HART

Ethernet HART multiplexer
Page 463

Industrial Wireless

Radioline wireless modules, WirelessHART, and accessories
Page 369

Wireless multiplexer with antennas
Page 386

WirelessHART, gateway and adapter
Page 384

Remote communication

Alerts, remote maintenance, and remote control
Page 399

Repeaters

The performance and availability of bus systems can be significantly increased by using repeaters. In addition to electrical isolation, bus segmentation with repeaters makes it possible to multiply the permissible coverage of the network and to extend the number of devices.

The **PSI-REP-PROFIBUS/12MB** modular repeater has been specially developed for the requirements of PROFIBUS systems.
- Bit retiming for unrestricted cascading of devices
- Filtering of faulty telegrams based on start delimiter detection
- Routing of supply voltage and data signals through DIN rail connectors

As a modular repeater, the **PSI-REP-RS485W2** can be used in RS-485 2-wire bus systems.
- Bit retiming for unrestricted cascading of devices
- Routing of supply voltage and data signals through DIN rail connectors

The **PSM-ME-RS485/RS485-P** compact repeater is designed for universal use in RS-485 2-wire bus systems.
- Transmission speeds of up to 1.5 Mbps
- Space-saving slim 22.5 mm device
- Shipbuilding approval in accordance with DNV

The **PSI-REP-DNET CAN** modular repeater connects two CAN segments with the same data rate.

Repeater for PROFIBUS, 4-way isolation, supports modular expansion

Ex:

Technical data

Supply	
Supply voltage	24 V DC (with UL approval)
Supply voltage range	18 V DC ... 30 V DC (via COMBICON plug-in screw terminal block)
Nominal current consumption	< 90 mA (24 V DC ⎓)
RS-485 interface	PROFIBUS in acc. with IEC 61158, RS-485 2-wire
Data format/encoding	UART (11 Bit, NRZ)
Data direction switching	Automatic control, min. station response time 2 bits
Termination resistor	external
Transmission speed	9.6/19.2/45.45/93.75/187.5/500/1500/3000/6000/12000 kbps (can be set manually and automatically)
Transmission distance	≤ 1200 m (depends on transmission speed and cable type)
Connection method	D-SUB-9 female connector
CAN interface	
Termination resistor	-
Transmission speed	
Transmission distance	-
Connection method	-
General data	
Bit distortion, input	max. ± 35%
Bit distortion, output	< 6.25%
Bit delay	1 bit (Direct mode)
Alarm output	30 V DC (1 A) / 65 V DC (0.46 A) / 150 V AC (0.46 A)
Test voltage	1.5 kV_{rms} (50 Hz, 1 min.)
Ambient temperature range	-20°C ... 60°C
Electrical isolation	VCC // TBUS // PROFIBUS (A) // PROFIBUS (B)
Dimensions W / H / D	35 mm / 99 mm / 105 mm
EMC note	Class A product, see page 527
Conformance/approvals	
ATEX	Ex II 3 G Ex nA nC IIC T4 Gc X
UL, USA/Canada	cULus listed UL 508 Class I, Zone 2, AEx nA nC IIC T6 Class I, Zone 2, Ex nA nC IIC T6 Gc X Class I, Div. 2, Groups A, B, C, D

Ordering data

Description	Type	Order No.	Pcs./Pkt.
Repeater, for electrical isolation and increased range	**PSI-REP-PROFIBUS/12MB**	2708863	1

Accessories

DIN rail connector (optional), for routing through the supply voltage and data signal, two pieces are required per device	**ME 17,5 TBUS 1,5/ 5-ST-3,81 GN**	2709561	10
System power supply, primary-switched	**MINI-SYS-PS-100-240AC/24DC/1.5**	2866983	1

Repeater for RS-485 2-wire systems, 4-way isolation, supports modular expansion

Ex:

Technical data
24 V DC (with UL approval)
18 V DC ... 30 V DC (via COMBICON plug-in screw terminal block)
75 mA (24 V DC ⎓)
RS-485 interface, in acc. with EIA/TIA-485, DIN 66259-4/RS-485 2-wire
UART (11/10 bit switchable; NRZ)
Automatic control, min. station response time 2 bits
390 Ω (can be connected to port A and B) / 150 Ω / 390 Ω
4.8/9.6/19.2/38.4/57.6/75/93.75/115.2/136/187.5/375/500 kbps (can be set manually)
≤ 1200 m (depends on transmission speed, bus system, and cable type)
Plug-in screw connection
-
-
-
max. ± 35%
< 6.25%
< 1 bit
-
1.5 kV_{rms} (50 Hz, 1 min.)
-20°C ... 60°C
VCC // TBUS // RS-485 (A) // RS-485 (B)
35 mm / 99 mm / 105 mm
Class A product, see page 527
Ex II 3 G Ex nA IIC T4 Gc X
508 recognized
Class I, Zone 2, AEx nA IIC T6
Class I, Zone 2, Ex nA IIC T6 Gc X
Class I, Div. 2, Groups A, B, C, D

Ordering data

Type	Order No.	Pcs./Pkt.
PSI-REP-RS485W2	2313096	1

Accessories

ME 17,5 TBUS 1,5/ 5-ST-3,81 GN	2709561	10
MINI-SYS-PS-100-240AC/24DC/1.5	2866983	1

Basic repeater for RS-485 2-wire systems, 3-way isolation

Ex:

Technical data
24 V AC/DC
18 V AC/DC ... 30 V AC/DC (via COMBICON plug-in screw terminal block)
90 mA (24 V DC)
RS-485 interface, in acc. with EIA/TIA-485, DIN 66259-4/RS-485 2-wire
UART (11/10 bit switchable; NRZ)
Automatic control, min. station response time 1 bits
390 Ω / 180 Ω / 390 Ω (can be connected)
1.2 / 2.4 / 4.8 / 9.6 / 19.2 / 38.4 / 57.6 / 75 / 93.75 / 115.2 / 136 / 187.5 / 375 / 500 / 1500 kbps
≤ 1200 m (depends on transmission speed, bus system, and cable type)
Plug-in screw connection
-
-
-
max. ± 35%
< 3.6%
< 200 ns
-
1.5 kV_{rms} (50 Hz, 1 min.)
-40°C ... 70°C
VCC // RS-485 (A) // RS-485 (B)
22.5 mm / 99 mm / 114.5 mm
Class A product, see page 527
Ex II 3 G Ex nA IIC T4 Gc
508 recognized
Class I, Div. 2, Groups A, B, C, D
Class I, Zone 2, AEx nA IIC T4
Class I, Zone 2, Ex nA IIC T4 Gc X

Ordering data

Type	Order No.	Pcs./Pkt.
PSM-ME-RS485/RS485-P	2744429	1

Accessories

Repeater for DeviceNet™ and CANopen®

Ex:

Technical data
24 V DC
10 V DC ... 30 V DC (via COMBICON plug-in screw terminal block)
55 mA (24 V DC)
-
-
-
-
-
CAN interface, in accordance with ISO/IS 11898 for DeviceNet, CAN, CANopen
124 Ω (integrated and ready to be switched)
≤ 1 Mbps (configurable via DIP switches)
≤ 5000 m (dependent on the data rate and the protocol used)
COMBICON plug-in screw terminal block
± 35%
< 6.25%
One telegram length (EXTENDED)
10 V DC ... 30 V DC ; 500 mA
1.5 kV_{rms} (50 Hz, 1 min.)
-20°C ... 60°C
VCC // TBUS // CAN A // CAN B
35 mm / 111 mm / 121 mm
Ex II 3 G Ex nA IIC T4 Gc X
508 Listed

Ordering data

Type	Order No.	Pcs./Pkt.
PSI-REP-DNET CAN	2313423	1

Accessories

ME 17,5 TBUS 1,5/ 5-ST-3,81 GN	2709561	10
MINI-SYS-PS-100-240AC/24DC/1.5	2866983	1

Terminator

The **PSI-TERMINATOR-PB-TBUS** active termination resistor ensures interference-free communication in PROFIBUS and RS-485 networks.

- Permanently active termination of the bus line, particularly in applications involving alternating bus devices
- Diagnostic LEDs for voltage and data activity
- Fixed programming interface in the network
- Termination can be connected externally
- Electrical isolation of power supply and data interface
- Redundant power supply
- Installation as single device or in combination with other devices
- Supply voltage routed through a DIN rail connector for use in combination with other devices
- Extended temperature range (-40°C ... +70°C)

Active bus termination for PROFIBUS and RS-485 2-wire systems

Ex:

Technical data

Supply		
Supply voltage		24 V DC (via COMBICON plug-in screw terminal block)
Supply voltage range		18 V DC ... 30 V DC (via COMBICON plug-in screw terminal block)
Nominal current consumption		10 mA (24 V DC, no load on D-SUB)
RS-485 interface		PROFIBUS in acc. with IEC 61158, RS-485 2-wire
Termination resistor		390 Ω / 220 Ω / 390 Ω (can be connected)
Transmission speed		≤ 12 Mbps
Transmission distance		≤ 1200 m (depends on transmission speed and cable type)
Connection method		D-SUB 9, COMBICON
General data		
Test voltage		1.5 kV AC (50 Hz, 1 min.)
Ambient temperature range		-40°C ... 70°C
Housing material		PA 6.6-FR
Electrical isolation		DIN EN 50178 (RS-485 // VCC)
Dimensions	W / H / D	22.5 mm / 92 mm / 73 mm
EMC note		Class A product, see page 527
Conformance/approvals		
UL, USA/Canada		508 Listed

Ordering data

Description	Type	Order No.	Pcs./Pkt.
Active termination resistor, bus termination can be activated, programming interface	**PSI-TERMINATOR-PB-TBUS**	2702636	1

Interface converters
RS-232 (V.24) / RS-422 (V.11)
RS-232 (V.24) / RS-485

PSM-ME-RS232/RS485-P

The RS-422 standard can be used to set up rapid, interference-free point-to-point connections in industrial applications.

The RS-485 standard allows more than two devices to communicate with one another. Converting the RS-232 point-to-point interface into the bus-capable RS-485 standard makes it possible to network up to 32 devices via a 2- or 4-wire cable.

Features:
- RS-422 4-wire point-to-point mode
- RS-485 2-wire mode, half duplex
- RS-485 4-wire mode, full duplex
- Automatic RS-485 transmit/receive changeover
- Integrated data indicator for dynamic indication of send and receive data
- High-quality 3-way isolation for safe decoupling of potentials

Applications:
- Fast and interference-free point-to-point connection between two RS-232 interfaces via RS-422
- Increase in range or remote transmission up to 1200 m

PSM-EG-RS 232/RS 422-P/4K

The PSM-EG... control cabinet module also converts the RS-232 signals in full duplex mode with a data rate of up to 64 kbps to the powerful RS-422 standard. However, in addition to the TxD/RxD transmit and receive channels, the converter also provides two further channels for transmitting RTS and CTS control lines.

Features:
- RS-422 4-wire point-to-point mode
- High-quality 3-way isolation between the power supply, RS-232, and RS-422 for reliable electrical isolation of the potentials with 2.5 kV
- Integrated surge protection with transient discharge to the DIN rail

Applications:
- Fast and interference-free point-to-point connection between two RS-232 interfaces via RS-422
- Programming or parameterization connection between PC (RS-232) and, for example, PLC or variable frequency drive with RS-422 connection
- Increased range of up to 1200 m, incl. control cables

RS-232 converter for RS-485 and RS-422

Ex:

Technical data

		PSM-ME-RS232/RS485-P	PSM-EG-RS232/RS422-P/4K
Supply			
Supply voltage range		18 V AC/DC ... 30 V AC/DC (via COMBICON plug-in screw terminal block)	19.2 V DC ... 28.8 V DC
Nominal current consumption		85 mA (24 V DC)	130 mA (24 V DC)
RS-232 interface		RS-232 interface in acc. with ITU-T V.28, EIA/TIA-232, DIN 66259-1	
Transmission speed		1.2; 2.4; 4.8; 7.2; 9.6; 19.2; 31.25; 38.4; 57.6; 75; 93.75; 115.2 kbps	64 kbps
Connection method		D-SUB 9 plug	D-SUB 9 plug
RS-422 interface		RS-422 interface in acc. with ITU-T V.11, EIA/TIA-422, DIN 66348-1	
Termination resistor		390 Ω / 150 Ω / 390 Ω (can be connected)	510 Ω / 150 Ω / 510 Ω (can be connected)
Transmission speed		1.2; 2.4; 4.8; 9.6; 19.2; 38.4; 57.6; 75; 93.75; 115.2 kbps	64 kbps
Transmission distance		1200 m (shielded twisted pair)	1200 m (twisted pair)
Connection method		Plug-in screw connection	D-SUB-15 male connector
RS-485 interface		RS-485 interface in acc. with EIA/TIA-485, DIN 66259-1	
Data direction switching		Automatic control or via RTS/CTS	
Termination resistor		390 Ω / 150 Ω / 390 Ω (can be connected)	
Transmission speed		1.2; 2.4; 4.8; 9.6; 19.2; 38.4; 57.6; 75; 93.75; 115.2 kbps	
Transmission distance		1200 m (shielded twisted pair)	
Connection method		Plug-in screw connection	
General data			
Bit delay		≤ 2.5 µs	≤ 3 µs
Test voltage		1.5 kV AC	2.5 kV
Ambient temperature range		-40°C ... 70°C	0°C ... 50°C
Transmission channels		2 (1/1), RxD, TxD, full duplex	4 (2/2), RxD, TxD, RTS, CTS; full duplex
Electrical isolation		VCC // RS-232 // RS-485	VCC // RS-232 // RS-422
Dimensions	W / H / D	22.5 mm / 99 mm / 114.5 mm	45 mm / 75 mm / 110 mm
EMC note		Class A product, see page 527	
Conformance/approvals			
UL, USA/Canada		508 recognized Class I, Div. 2, Groups A, B, C, D Class I, Zone 2, AEx nA IIC T4 Class I, Zone 2, Ex nA IIC T4 Gc X	cUL 508 Recognized

Ordering data

Description	Type	Order No.	Pcs./Pkt.
Interface converter			
- for converting RS-232 (V.24) to RS-485	**PSM-ME-RS232/RS485-P**	2744416	1
- for converting RS-232 (V.24) to RS-422 (V.11)	**PSM-EG-RS232/RS422-P/4K**	2761266	1

Interface isolator RS-232/RS-232

The RS-232 interface is an asymmetric voltage interface (common signal ground for all signals). As well as having a very low signal power, the signal ground is connected to ground potential. This results in very little immunity to interference and a maximum range of 15 m.

A considerably higher level of immunity to interference can be achieved in industrial applications by using RS-232 isolator modules. The high-quality 3-way isolation results in an electrically isolated and interference-proof RS-232 interface. This decoupling also protects the expensive end devices against damage.

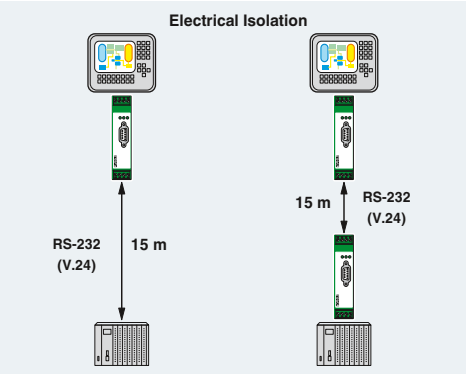

RS-232

RS-232 interface isolator

Ex:

Features:

- High-quality 3-way isolation up to 2 kV (VCC // RS-232 // RS-232)
- Max. transmission rate of up to 115.2 kbps
- 24 V DC or AC power supply suitable for control cabinet
- Mounting on standard EN DIN rails
- Integrated surge protection with transient discharge to the DIN rail
- In the case of variable cable lengths, the RS-232 connection on the field side can be established conveniently using plug-in screw terminal blocks
- Transmission of TxD/RxD data channels and RTS/CTS control lines
- Active data transmission indicated by separate data indicators for the transmit and receive channels

Application:

- Higher level of immunity to interference for industrial conditions
- Compensating currents avoided through electrical isolation
- Protection of expensive end devices through decoupling
- Optimum protection of both interface sides, thanks to two RS-232/RS-232 interface isolators

Technical data

Supply		
Supply voltage		24 V AC/DC ±20%
Supply voltage range		19.2 V AC/DC ... 28.8 V AC/DC
Nominal current consumption		40 mA (24 V DC)
RS-232 interface		RS-232 interface in acc. with ITU-T V.28, EIA/TIA-232, DIN 66259-1
Transmission speed		115.2 kbps
Transmission distance		15 m (shielded twisted pair)
Connection method		D-SUB 9 plug Plug-in screw connection
General data		
Bit distortion		< 5%
Bit delay		< 3 µs
Test voltage		2 kV_{rms} (50 Hz, 1 min.)
Ambient temperature range		0°C ... 55°C
Housing material		PA
Transmission channels		4 (2/2), RxD, TxD, RTS, CTS; full duplex
Electrical isolation		VCC // RS-232 (A) // RS-232 (B)
Dimensions	W / H / D	22.5 mm / 99 mm / 118.6 mm
EMC note		Class A product, see page 527
Conformance/approvals		
UL, USA/Canada		508 recognized Class I, Div. 2, Groups A, B, C, D Class I, Zone 2, AEx nA IIC T4 Class I, Zone 2, Ex nA IIC T4 Gc X

Ordering data

Description	Type	Order No.	Pcs./Pkt.
Interface isolator, for electrical isolation of RS-232 (V.24) interfaces, four channels, rail-mountable	**PSM-ME-RS232/RS232-P**	2744461	1

Interface converter RS-232/TTY

This converter converts a an RS-232 interface into a 20 mA TTY current loop interface bidirectionally.

The interference immune TTY signal allows problem-free data transmission over distances of up to 1000 m using a twisted-pair and shielded 4-wire cable.

Features:

- Conversion of RS-232 TxD/RxD full duplex data signals into the TTY current loop standard
- Semi-active, active or passive TTY operating mode, depending on pin assignment
- Transmission speed of up to 19.2 kbps
- Transmission distances of up to 1000 m in active TTY mode
- 24 V DC or AC power supply suitable for control cabinet
- Active data transmission indicated by separate data indicators for the transmit and receive channels
- Convenient connection for variable cable lengths, enabling the TTY connection on the field side to be established via plug-in screw terminal blocks
- RS-232 connection via D-SUB 9 and standard RS-232 cable
- High-quality 3-way isolation up to 2 kV (VCC // RS-232 // TTY)
- Mounting on standard EN DIN rails
- Integrated surge protection with transient discharge to the DIN rail

Application:

The following tasks are generally performed with the converters (see illustration):

- Interface adaptation between RS-232 and TTY interfaces
- Increased range of up to 1000 m
- Programming connection between PC (RS-232) and, for example, S5 controllers with TTY programming interface for temporary coupling

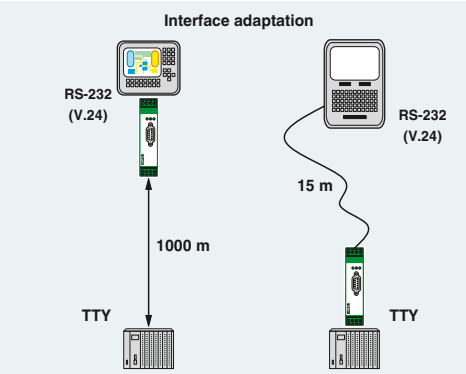

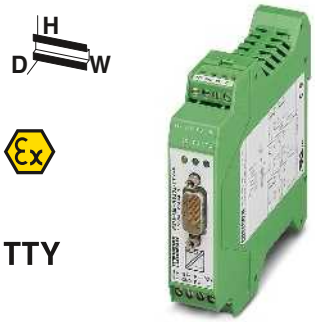

TTY converter, 2 channels

Ex:

Technical data

Supply		
Supply voltage		24 V AC/DC ±20% (via COMBICON plug-in screw terminal block)
Nominal current consumption		75 mA (24 V DC)
RS-232 interface		RS-232 interface in acc. with ITU-T V.28, EIA/TIA-232, DIN 66259-1
Transmission speed		≤ 19.2 kbps
Transmission distance		15 m (shielded twisted pair)
Connection method		D-SUB 9 plug
TTY interface		TTY interface, CL2 in acc. with DIN 66348-1
Transmission speed		≤ 19.2 kbps
Transmission distance		1000 m (shielded twisted pair)
Connection method		Plug-in screw connection
Operating mode		Active, semi active, passive
Load		≤ 500 Ω
General data		
Bit distortion		< 5%
Bit delay		< 3 µs
Test voltage		2 kV_{rms} (50 Hz, 1 min.)
Ambient temperature range		0°C ... 55°C
Housing material		PA
Transmission channels		2 (1/1), RxD, TxD, full duplex
Electrical isolation		VCC // RS-232 // TTY
Dimensions	W / H / D	22.5 mm / 99 mm / 118.6 mm
EMC note		Class A product, see page 527
Conformance/approvals		
UL, USA/Canada		508 recognized Class I, Div. 2, Groups A, B, C, D Class I, Zone 2, AEx nA IIC T4 Class I, Zone 2, Ex nA IIC T4 Gc X

Ordering data

Description	Type	Order No.	Pcs./Pkt.
Interface converter, for conversion from RS-232 (V.24) to TTY, with electrical isolation, two channels, rail-mountable	**PSM-ME-RS232/TTY-P**	2744458	1

Extenders

Network PROFIBUS or serial devices that are up to 20 km away from each other via existing copper cables, e.g., using in-house telephone lines. Special Ethernet or fiber optic cables are not required.

Features:
- Plug-and-Play
- Distances up to 20 km
- Data rates of up to 30 Mbps (4-conductor)
- Data rates of up to 15.3 Mbps (2-conductor)
- Robust modulation method (SHDSL)
- Via in-house cables, not via the public telephone network

Topologies:
- Point-to-point
- Line structure
- Redundancy operation

Additional features:
- Two digital outputs for status transmission
- Configuration software for extended functionality
- Online diagnostics
- Logbook function
- Saving and printing of project and device configurations

PROFIBUS:
- Data rates of up to 1.5 Mbps (point-to-point)
- Data rates of up to 500 kbps (line structure)
- Redundancy operation supported
- Configuration software
- Easy, guided configuration
- Calculation of the maximum PROFIBUS data rate
- Calculation of the slot time
- Online diagnostics
- Mixed operation of copper cables and fiber optics

RS-232/RS-422/RS-485:
- RS-232 interface (9-pos. D-SUB): Data rates of up to 230.4 kbps
- Automatic DCE/DTE switchover
- RS-422/RS-485 W2 interface (COMBICON connector): Data rates of up to 2000 kbps
- Termination resistor, can be enabled/disabled (RS-485 W2)

Additional information can be found in the relevant data sheets/user manuals.

Supply	
Supply voltage range	
Supply voltage	
Nominal current consumption	
RS-232 interface	
Connection method	
Transmission speed	
RS-422 interface	
Connection method	
Transmission speed	
RS-485 interface	
Connection method	
Transmission speed	
SHDSL interface	
Connection method	
Transmission speed	
Transmission distance	
USB interface	
Connection method	
Functions	
Management	
Digital output	
Number of outputs	
General data	
Dimensions	W / H / D
Ambient temperature (operation)	
Electrical isolation	
Test voltage	
Electromagnetic compatibility	
EMC note	

Description
SHDSL permanent line modem, for point-to-point, linear, and star structures on in-house 2- and 4-wire cables
System power supply, primary-switched
DIN rail connector (optional), for routing through the supply voltage and data signal, two pieces are required per device
DATATRAB adapter, protective adapter with RJ45 and screw connection for two SHDSL telecommunications interfaces

RS-232

Serial extender

Ex:

Technical data
18 V DC ... 30 V DC 24 V DC ±5% (as an alternative or redundant, via backplane bus contact and system power supply)
< 180 mA (24 V DC)
D-SUB 9 plug 0.11/0.3/1.2/2.4/4.8/9.6/19.2/38.4/57.6/115.2/230.4 kbps, NRZ
RS-422 interface in acc. with ITU-T V.11, EIA/TIA-422, DIN 66348-1
Plug-in/screw connection via COMBICON 1.2/2.4/4.8/7.0/9.6/19.2/38.4/57.6/75/93.75/115.2/136/187.5/375/500/1500/2000 kbps, NRZ
RS-485 interface, in acc. with EIA/TIA-485, DIN 66259-4/RS-485 2-wire Plug-in/screw connection via COMBICON 1.2/2.4/4.8/7.0/9.6/19.2/38.4/57.6/75/93.75/115.2/136/187.5/375/500/1500/2000 kbps, NRZ
SHDSL interface in accordance with ITU-T G.991.2.bis 2 x 2-pos. COMBICON plug-in screw terminal blocks 4-wire operation: 64 kbps ... 30 Mbps 2-wire operation: 32 kbps ... 15.3 Mbps up to 20 km (depending on data rate and cable cross section)
USB 2.0 Mini-USB type B, 5-pos.
User-friendly software: Guided configuration, plausibility checks, diagnostic functions, log book
2
35 mm / 99 mm / 114.5 mm -20°C ... 60°C (for derating, see technical documentation)
DIN EN 50178 (VCC, RS-232 // RS-422, RS-485 // DSL (A) // DSL (B) // FE) 1.5 kV_{rms} (50 Hz, 1 min.) Conformance with EMC Directive 2014/30/EU Class A product, see page 527

Ordering data

Type	Order No.	Pcs./Pkt.
PSI-MODEM-SHDSL/SERIAL	2313669	1

Accessories

MINI-SYS-PS-100-240AC/24DC/1.5	2866983	1
ME 17,5 TBUS 1,5/ 5-ST-3,81 GN	2709561	10
DT-TELE-SHDSL	2801593	1

PROFIBUS extender

Ex:

Technical data
18 V DC ... 30 V DC 24 V DC ±5% (as an alternative or redundant, via backplane bus contact and system power supply)
< 180 mA (24 V DC)
- -
- -
PROFIBUS in acc. with IEC 61158, RS-485 2-wire, half duplex, automatic control D-SUB-9 female connector 9.6/19.2/45.45/93.75/187.5/500/1500 kbps, set via configuration software
SHDSL interface in accordance with ITU-T G.991.2.bis 2 x 2-pos. COMBICON plug-in screw terminal blocks 4-wire operation: 64 kbps ... 30 Mbps 2-wire operation: 32 kbps ... 15.3 Mbps up to 20 km (depending on data rate and cable cross section)
USB 2.0 Mini-USB type B, 5-pos.
User-friendly software: Guided configuration, plausibility checks, diagnostic functions, log book
2
35 mm / 99 mm / 114.5 mm -20°C ... 60°C (for derating, see technical documentation)
DIN EN 50178 (VCC // PROFIBUS // DSL (A) // DSL (B) // FE) 1.5 kV_{rms} (50 Hz, 1 min.) Conformance with EMC Directive 2014/30/EU Class A product, see page 527

Ordering data

Type	Order No.	Pcs./Pkt.
PSI-MODEM-SHDSL/PB	2313656	1

Accessories

MINI-SYS-PS-100-240AC/24DC/1.5	2866983	1
ME 17,5 TBUS 1,5/ 5-ST-3,81 GN	2709561	10
DT-TELE-SHDSL	2801593	1

FO converters for PROFIBUS

The **PSI-MOS-PROFIB/FO...** devices convert copper-based PROFIBUS interfaces to fiber optics.

The integrated optical diagnostics allow permanent monitoring of the FO paths during installation and also during operation. The floating switch contact is activated when the signal output on the fiber optic paths drops to a critical level.

Depending on which wavelength is used in conjunction with the corresponding fibers, transmission distances of 70 m to 45 km can be achieved between two devices. Depending on the wavelength, devices can be used with polymer, PCF, and fiberglass.

- Automatic data rate detection or fixed data rate setting via DIP switches
- Suitable for all data rates of up to 12 Mbps
- Integrated optical diagnostics for continuous monitoring of fiber optic paths
- Floating switch contact for leading alarm generation in relation to critical fiber optic paths
- High-quality electrical isolation between all interfaces (PROFIBUS // fiber optic ports // power supply // DIN rail connector)
- Bit retiming for any cascading depth
- Routing of supply voltage and data signals through DIN rail connectors
- Redundant power supply supported in the form of optional system power supply
- Can be combined with the PSI copper repeater for PROFIBUS in a modular way using DIN rail connectors

The **PSI-MOS-PROFIB/FO...E** end devices convert a PROFIBUS interface to a **FO cable**. They are ideal for point-to-point connections.

The **PSI-MOS-PROFIB/FO...T** T-couplers allow the interface to be converted to two **FO cables**. They can be used to create linear structures and ring structures for increased system availability.

Supply	
Supply voltage range	
Nominal current consumption	
RS-485 interface	
Data format/encoding	
Transmission speed	
Transmission distance	
Connection method	
Optical interface	
Connection	
Wavelength	
Transmission distance incl. 3 dB system reserve	
General data	
Bit delay	
Alarm output	
Ambient temperature range	
Dimensions	W / H / D
EMC note	
Conformance/approvals	
ATEX	
UL, USA/Canada	

Description
FO converter, for converting data signals to fiber optics
- End device with one FO interface - T-coupler with two FO interfaces

DIN rail connector (optional), for routing through the supply voltage and data signal, two pieces are required per device
DIN rail connector, (optional), for routing through the supply voltage, two pieces are required per device
System power supply, primary-switched

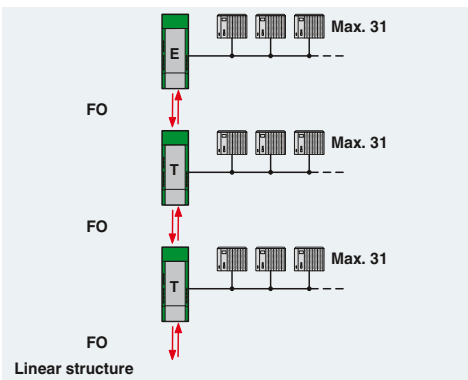

PROFIBUS polymer and PCF fibers

Ex:

Technical data	
	18 V DC ... 30 V DC
	100 mA (24 V DC)
	PROFIBUS in acc. with IEC 61158, RS-485 2-wire, half duplex, automatic control
	UART (11 Bit, NRZ)
	≤ 12 Mbps
	≤ 1200 m (depending on the data rate, with shielded, twisted pair data cable)
	D-SUB-9 female connector
	F-SMA
	660 nm
	70 m (with F-P 980/1000 230 dB/km with quick mounting connector) 400 m (with F-K 200/230 10 dB/km with quick mounting connector)
	< 1 bit
	60 V DC / 42 V AC ; 0.46 A
	-20°C ... 60°C
	35 mm / 99 mm / 106 mm
	Class A product, see page 527
	II 3 G Ex nA nC IIC T4 Gc X II (2) G [Ex op is Gb] IIC (PTB 06 ATEX 2042 U) II (2) D [Ex op is Db] IIIC (PTB 06 ATEX 2042 U)
	Class I, Zone 2, AEx nc IIC T5 Class I, zone 2, Ex nC nL IIC T5 X Class I, Div. 2, Groups A, B, C, D

Ordering data

Type	Order No.	Pcs./Pkt.
PSI-MOS-PROFIB/FO 660 E	2708290	1
PSI-MOS-PROFIB/FO 660 T	2708287	1

Accessories

ME 17,5 TBUS 1,5/ 5-ST-3,81 GN	2709561	10
ME 17,5 TBUS 1,5/PP000-3,81 BK	2890014	10
MINI-SYS-PS-100-240AC/24DC/1.5	2866983	1

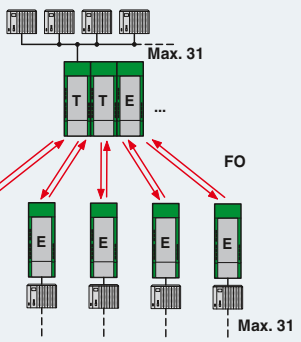

Star structure

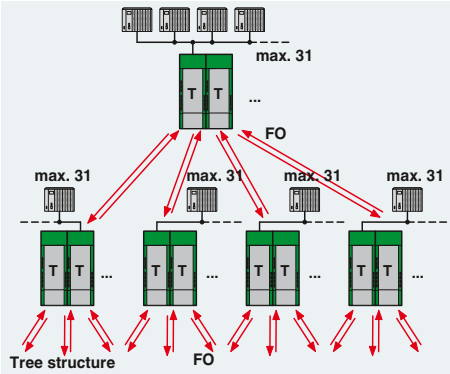

Tree structure

PROFIBUS PCF and fiberglass (multimode)

Ex:

Technical data	
	18 V DC ... 30 V DC
	120 mA (24 V DC)
	PROFIBUS in acc. with IEC 61158, RS-485 2-wire, half duplex, automatic control
	UART (11 Bit, NRZ)
	≤ 12 Mbps
	≤ 1200 m (depending on the data rate, with shielded, twisted pair data cable)
	D-SUB-9 female connector
	B-FOC (ST®)
	850 nm
	2600 m (with F-G 50/125 2.5 dB/km) 3300 m (with F-G 62.5/125 3.0 dB/km) 800 m (with F-K 200/230 10 dB/km with quick mounting connector)
	< 1 bit
	60 V DC / 42 V AC ; 0.46 A
	-20°C ... 60°C
	35 mm / 99 mm / 106 mm
	Class A product, see page 527
	II 3 G Ex nA nC IIC T4 Gc X II (2) G [Ex op is Gb] IIC (PTB 06 ATEX 2042 U) II (2) D [Ex op is Db] IIIC (PTB 06 ATEX 2042 U)
	Class I, Zone 2, AEx nc IIC T5 Class I, zone 2, Ex nC nL IIC T5 X Class I, Div. 2, Groups A, B, C, D

Ordering data

Type	Order No.	Pcs./Pkt.
PSI-MOS-PROFIB/FO 850 E	2708274	1
PSI-MOS-PROFIB/FO 850 T	2708261	1

Accessories

ME 17,5 TBUS 1,5/ 5-ST-3,81 GN	2709561	10
ME 17,5 TBUS 1,5/PP000-3,81 BK	2890014	10
MINI-SYS-PS-100-240AC/24DC/1.5	2866983	1

PROFIBUS fiberglass (multimode and single mode)

Ex:

Technical data	
	18 V DC ... 32 V DC
	55 mA (24 V DC)
	PROFIBUS in acc. with IEC 61158, RS-485 2-wire, half duplex, automatic control
	UART (11 Bit, NRZ)
	≤ 12 Mbps
	≤ 1200 m (depending on the data rate, with shielded, twisted pair data cable)
	D-SUB-9 female connector
	SC duplex
	1300 nm
	25 km (with F-G 50/125 0.7 dB/km at 1300 nm) 22 km (with F-G 62.5/125 0.8 dB/km at 1300 nm) 45 km (with F-E 9/125 0.4 dB/km at 1300 nm)
	< 1 bit
	60 V DC / 42 V AC ; 1 A
	-20°C ... 60°C
	35 mm / 105 mm / 106 mm
	Class A product, see page 527
	II 3 G Ex nA nC IIC T4 Gc X
	508 Listed 508 recognized

Ordering data

Type	Order No.	Pcs./Pkt.
PSI-MOS-PROFIB/FO1300 E	2708559	1
PSI-MOS-PROFIB/FO1300 T	2708892	1

Accessories

ME 17,5 TBUS 1,5/ 5-ST-3,81 GN	2709561	10
ME 17,5 TBUS 1,5/PP000-3,81 BK	2890014	10
MINI-SYS-PS-100-240AC/24DC/1.5	2866983	1

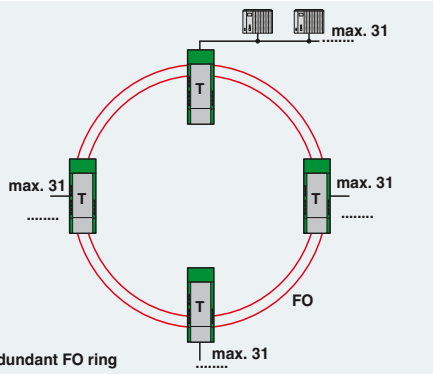

Redundant FO ring

FO converters for DeviceNet™ and CANopen®

The PSI-MOS-DNET... fiber optic transmission system enables DeviceNet™ and CANopen® users to benefit from simple and interference-free networking based on fiber optics. In addition, bus cable short circuits only affect the specific potential segment concerned. This increases overall availability, and improves flexibility when designing the bus topology. The use of fiber optic technology enables branch lines and star and tree structures to be created.

The 22.5 mm space-saving devices from the **PSI-MOS-DNET CAN/FO...** series feature an internal backplane. The maximum network expansion that can be achieved (sum total of copper and fiber optic cables) essentially depends on the data rate used.

– Data rates of up to 800 kbps, set via DIP switches
– Integrated optical diagnostics for continuous monitoring of fiber optic paths
– Floating switch contact in basic module for leading alarm generation in relation to critical fiber optic paths
– High-quality electrical isolation between all interfaces (DeviceNet // fiber optic port // power supply // backplane)
– Integrated backplane for routing through the supply voltage and data signals

Thanks to extended functions, the modular devices in the **PSI-MOS-DNET/FO...** series support network expansion that is not dependent on the data rate.

– Automatic data rate detection or fixed data rate setting via DIP switches
– Data rates of up to 1000 kbps
– Integrated optical diagnostics for continuous monitoring of fiber optic paths
– Floating switch contact for leading alarm generation in relation to critical fiber optic paths
– High-quality electrical isolation between all interfaces (DeviceNet // fiber optic ports // power supply // DIN rail connector)
– Routing of supply voltage and data signals through DIN rail connectors
– Redundant power supply supported in the form of optional system power supply
– Can be combined with the PSI copper repeater in a modular way using DIN rail connectors

Supply	
Supply voltage range	
Nominal current consumption	
CAN interface	
Termination resistor	
Transmission speed	
Transmission distance	
Connection method	
Optical interface	
Connection	
Wavelength	
Transmission distance incl. 3 dB system reserve	
General data	
Bit delay	
Alarm output	
Test voltage	
Ambient temperature range	
Dimensions	W / H / D
EMC note	
Conformance/approvals	
ATEX	
UL, USA/Canada	

Description
FO converter, for converting data signals to fiber optics
- Basic module with one FO interface - Extension module with one FO interface
- End device with one FO interface - T-coupler with two FO interfaces

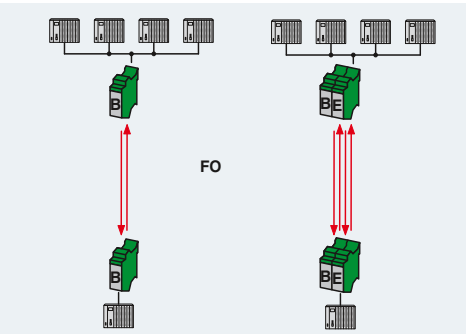

Branch line / redundant branch line

DeviceNet™ and CANopen® Polymer and PCF fibers

Ex:

Technical data

10 V DC ... 30 V DC (via COMBICON plug-in screw terminal block)
100 mA (24 V DC)
CAN interface, in accordance with ISO/IS 11898 for DeviceNet, CAN, CANopen
120 Ω (can be connected)
≤ 800 kbps
≤ 5000 m (dependent on the data rate and the protocol used)
Plug-in screw connection
F-SMA
660 nm
100 m (with F-P 980/1000 230 dB/km with quick mounting connector) 800 m (with F-K 200/230 10 dB/km with quick mounting connector)
< 1 bit
60 V DC / 42 V AC ; 0.46 A
1.5 kV_{rms} (50 Hz, 1 min.)
-20°C ... 60°C
22.5 mm / 99 mm / 114.5 mm
Class A product, see page 527
II 3 G Ex nA nC IIC T4 Gc X II (2) G [Ex op is Gb] IIC (PTB 06 ATEX 2042 U) II (2) D [Ex op is Db] IIIC (PTB 06 ATEX 2042 U)
Class I, Zone 2, AEx nc IIC T5 Class I, Div. 2, Groups A, B, C, D

Ordering data

Type	Order No.	Pcs./Pkt.
PSI-MOS-DNET CAN/FO 660/BM	2708054	1
PSI-MOS-DNET CAN/FO 660/EM	2708067	1

DeviceNet™ and CANopen® HCS and fiberglass (multimode)

Ex:

Technical data

10 V DC ... 30 V DC (via COMBICON plug-in screw terminal block)
100 mA (24 V DC)
CAN interface, in accordance with ISO/IS 11898 for DeviceNet, CAN, CANopen
120 Ω (can be connected)
≤ 800 kbps
≤ 5000 m (dependent on the data rate and the protocol used)
Plug-in screw connection
B-FOC (ST®)
850 nm
2800 m (with F-K 200/230 8 dB/km with quick mounting connector) 4800 m (with F-G 50/125 2.5 dB/km) 4200 m (with F-G 62.5/125 3.0 dB/km)
< 1 bit
60 V DC / 42 V AC ; 0.46 A
1.5 kV_{rms} (50 Hz, 1 min.)
-20°C ... 60°C
22.5 mm / 99 mm / 114.5 mm
Class A product, see page 527
II 3 G Ex nA nC IIC T4 Gc X II (2) G [Ex op is Gb] IIC (PTB 06 ATEX 2042 U) II (2) D [Ex op is Db] IIIC (PTB 06 ATEX 2042 U)
Class I, Zone 2, AEx nc IIC T5 Class I, Div. 2, Groups A, B, C, D

Ordering data

Type	Order No.	Pcs./Pkt.
PSI-MOS-DNET CAN/FO 850/BM	2708083	1
PSI-MOS-DNET CAN/FO 850/EM	2708096	1

DeviceNet™ and CANopen® PCF and fiberglass (multimode) external backplane

Ex:

Technical data

11 V DC ... 30 V DC (via COMBICON plug-in screw terminal block)
130 mA (24 V DC)
CAN interface, in accordance with ISO/IS 11898 for DeviceNet, CAN, CANopen
124 Ω (integrated and ready to be switched)
≤ 1 Mbps (configurable via DIP switches)
≤ 5000 m (dependent on the data rate and the protocol used)
COMBICON plug-in screw terminal block
B-FOC (ST®)
850 nm
1800 m (with F-K 200/230 8 dB/km with quick mounting connector) 4600 m (with F-G 50/125 2.5 dB/km) 4200 m (with F-G 62.5/125 3.0 dB/km)
≤ 1 bit (configurable)
11 V DC ... 30 V DC ; 500 mA
1.5 kV_{rms} (50 Hz, 1 min.)
-20°C ... 60°C
35 mm / 102 mm / 119 mm
Class A product, see page 527
II 3 G Ex nA IIC T4 Gc X
508 Listed

Ordering data

Type	Order No.	Pcs./Pkt.
PSI-MOS-DNET/FO 850 E	2313999	1
PSI-MOS-DNET/FO 850 T	2313986	1

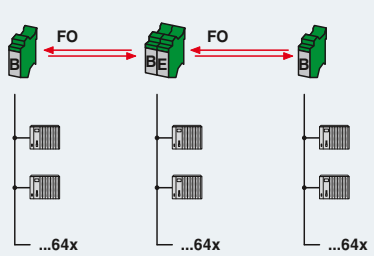

Linear structure

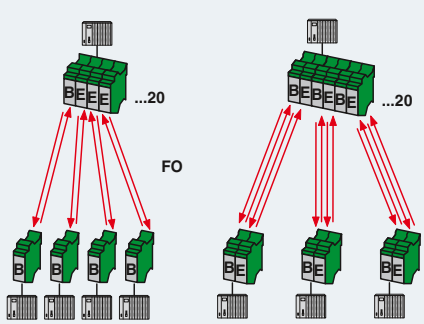

Star structure / redundant star structure

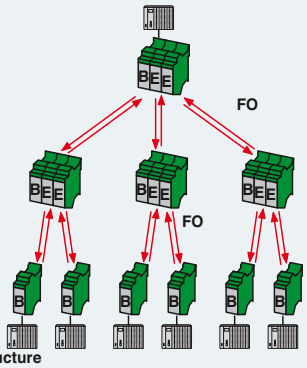

Tree structure

FO converters for RS-485 2-wire bus systems

The RS-485 2-wire interface is the most widely used interface in the field of automation technology. Well-known bus systems, such as SUCONET K, Modbus-ASCII, Modbus/RTU, S-BUS, and DH-485, are all based on this interface, as are many other company-specific bus systems.

The **PSI-MOS-RS485W2/FO...** FO converters convert the electrical data signal into an optical one by protocol transparent means.

The integrated optical diagnostics allow permanent monitoring of the FO paths during installation and also during operation. The floating switch contact is activated when the signal output on the fiber optic paths drops to a critical level.

Depending on which wavelength is used in combination with the corresponding fiber, distances of between 100 m and 45 km can be achieved between two devices.

- Automatic data rate detection or fixed data rate setting via DIP switches
- Suitable for data rates of up to 500 kbps
- Integrated optical diagnostics for continuous monitoring of fiber optic paths
- Floating switch contact for leading alarm generation in relation to critical fiber optic paths
- High-quality electrical isolation between all interfaces (RS-485 // fiber optic ports // power supply // DIN rail connector)
- Routing of supply voltage and data signals through DIN rail connectors
- Redundant power supply supported in the form of optional system power supply
- Can be combined with the PSI copper repeater in a modular way using DIN rail connectors

The **PSI-MOS-RS485W2/FO... E** end devices convert an RS-485 interface to a fiber optic cable. They are ideal for point-to-point connections.

The **PSI-MOS-RS485W2/FO... T** T-couplers allow the interface to be converted to **two FO cables**. They can be used to create linear structures and redundant structures for increased system availability.

Supply voltage range	
Nominal current consumption	
RS-485 interface	
Data format/encoding	
Termination resistor	
Transmission speed	
Transmission distance	
Connection method	
Optical interface	
Connection	
Wavelength	
Transmission distance incl. 3 dB system reserve	
General data	
Test voltage	
Ambient temperature range	
Dimensions	W / H / D
EMC note	
Conformance/approvals	
ATEX	
UL, USA/Canada	

Description
FO converter, for converting data signals to fiber optics
- End device with one FO interface - T-coupler with two FO interfaces
DIN rail connector (optional), for routing through the supply voltage and data signal, two pieces are required per device
DIN rail connector, (optional), for routing through the supply voltage, two pieces are required per device
System power supply, primary-switched

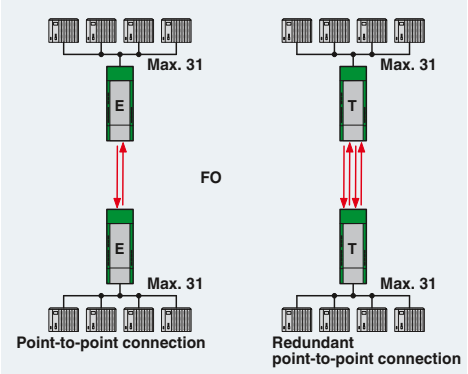

RS-485 2-wire polymer and PCF fibers

Ex:

Technical data

18 V DC ... 30 V DC
100 mA (24 V DC)
RS-485 interface, 2-wire
UART (11/10 bit switchable; NRZ), slip-tolerant
390 Ω / 220 Ω / 390 Ω (can be connected)
4.8/9.6/19.2/38.4/57.6/75/93.75/115.2/136/187.5/375/500 kbps
≤ 1200 m (depending on the data rate, with shielded, twisted data cable)
Plug-in screw connection
F-SMA
660 nm
100 m (with F-P 980/1000 230 dB/km with quick mounting connector) 800 m (with F-K 200/230 10 dB/km with quick mounting connector)
1.5 kV_{rms} (50 Hz, 1 min.)
-20°C ... 60°C
35 mm / 99 mm / 105 mm
Class A product, see page 527
II 3 G Ex nA nC IIC T4 Gc X II (2) G [Ex op is Gb] IIC (PTB 06 ATEX 2042 U) II (2) D [Ex op is Db] IIIC (PTB 06 ATEX 2042 U)
Class I, Zone 2, AEx nc IIC T5 Class I, zone 2, Ex nC nL IIC T5 X Class I, Div. 2, Groups A, B, C, D

Ordering data

Type	Order No.	Pcs./Pkt.
PSI-MOS-RS485W2/FO 660 E	2708313	1
PSI-MOS-RS485W2/FO 660 T	2708300	1

Accessories

ME 17,5 TBUS 1,5/ 5-ST-3,81 GN	2709561	10
ME 17,5 TBUS 1,5/PP000-3,81 BK	2890014	10
MINI-SYS-PS-100-240AC/24DC/1.5	2866983	1

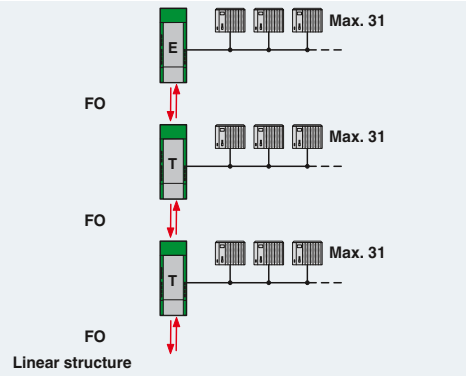

RS-485 2-wire PCF and fiberglass (multimode)

Ex:

Technical data

18 V DC ... 30 V DC
120 mA (24 V DC)
RS-485 interface, 2-wire
UART (11/10 bit switchable; NRZ), slip-tolerant
390 Ω / 220 Ω / 390 Ω (can be connected)
4.8/9.6/19.2/38.4/57.6/75/93.75/115.2/136/187.5/375/500 kbps
≤ 1200 m (depending on the data rate, with shielded, twisted data cable)
Plug-in screw connection
B-FOC (ST®)
850 nm
2800 m (with F-K 200/230 8 dB/km with quick mounting connector) 4200 m (with F-G 50/125 2.5 dB/km) 3300 m (with F-G 62.5/125 3.0 dB/km)
1.5 kV_{rms} (50 Hz, 1 min.)
-20°C ... 60°C
35 mm / 99 mm / 105 mm
Class A product, see page 527
II 3 G Ex nA nC IIC T4 Gc X II (2) G [Ex op is Gb] IIC (PTB 06 ATEX 2042 U) II (2) D [Ex op is Db] IIIC (PTB 06 ATEX 2042 U)
Class I, Zone 2, AEx nc IIC T5 Class I, zone 2, Ex nC nL IIC T5 X Class I, Div. 2, Groups A, B, C, D

Ordering data

Type	Order No.	Pcs./Pkt.
PSI-MOS-RS485W2/FO 850 E	2708339	1
PSI-MOS-RS485W2/FO 850 T	2708326	1

Accessories

ME 17,5 TBUS 1,5/ 5-ST-3,81 GN	2709561	10
ME 17,5 TBUS 1,5/PP000-3,81 BK	2890014	10
MINI-SYS-PS-100-240AC/24DC/1.5	2866983	1

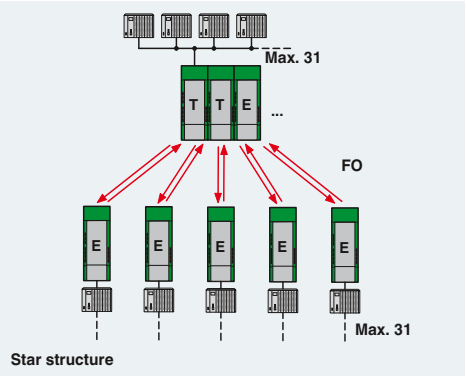

RS-485 2-wire fiberglass (multimode and single mode)

Ex:

Technical data

18 V DC ... 32 V DC
55 mA (24 V DC)
RS-485 interface, 2-wire
UART (11/10 bit switchable; NRZ), slip-tolerant
390 Ω / 220 Ω / 390 Ω (can be connected)
4.8/9.6/19.2/38.4/57.6/75/93.75/115.2/136/187.5/375/500 kbps
≤ 1200 m (depending on the data rate, with shielded, twisted data cable)
Plug-in screw connection
SC duplex
1300 nm
25 km (with F-G 50/125 0.7 dB/km at 1300 nm) 22 km (with F-G 62.5/125 0.8 dB/km at 1300 nm) 45 km (with F-E 9/125 0.4 dB/km at 1300 nm)
1.5 kV_{rms} (50 Hz, 1 min.)
-20°C ... 60°C
35 mm / 99 mm / 105 mm
Class A product, see page 527
II 3 G Ex nA nC IIC T4 Gc X
508 Listed 508 recognized

Ordering data

Type	Order No.	Pcs./Pkt.
PSI-MOS-RS485W2/FO1300 E	2708562	1

Accessories

ME 17,5 TBUS 1,5/ 5-ST-3,81 GN	2709561	10
ME 17,5 TBUS 1,5/PP000-3,81 BK	2890014	10
MINI-SYS-PS-100-240AC/24DC/1.5	2866983	1

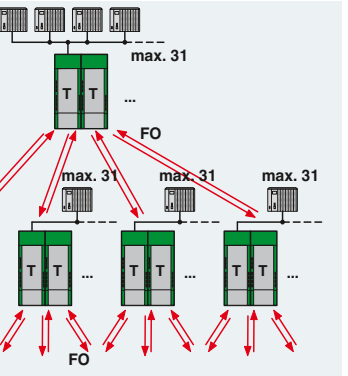

FO converters for INTERBUS, RS-422, and RS-485 4-wire bus systems

The **PSI-MOS-RS422/FO...** devices are used for converting INTERBUS interfaces to fiber optics.

INTERBUS lines are constructed with the **PSI-MOS-RS422...E end devices**. The **PSI-MOS-RS422...T T-couplers** also allow redundant **INTERBUS connections** via fiber optics.

If RS-422 end devices are used, only one end device can be connected to each PSI-MOS-RS422/FO... device. A suitable communication protocol (e.g., Modbus/RTU) is implemented by means of end device addressing.

- Automatic data rate detection for all data rates up to 2 Mbps
- Integrated optical diagnostics for continuous monitoring of fiber optic paths
- Floating switch contact for leading alarm generation in relation to critical fiber optic paths
- High-quality electrical isolation between all interfaces (copper // FO ports // supply // DIN rail connector)
- Connections can be plugged in using a COMBICON screw terminal block
- Redundant power supply supported in the form of optional system power supply
- Routing through of the supply voltage via the DIN rail connector
- Approved for use in zone 2
- Intrinsically safe FO interface (Ex op is) for direct connection to devices in zone 1 (all 660 and 850 nm versions)

Supply	
Supply voltage range	
Nominal current consumption	
RS-422 interface	
Transmission speed	
Transmission distance	
Connection method	
Optical interface	
Connection	
Wavelength	
Transmission distance incl. 3 dB system reserve	
General data	
Bit delay	
Alarm output	
Test voltage	
Ambient temperature range	
Dimensions	W / H / D
EMC note	
Conformance/approvals	
ATEX	
UL, USA/Canada	

Description
FO converter, for converting data signals to fiber optics
- End device with one FO interface - T-coupler with two FO interfaces

DIN rail connector, (optional), for routing through the supply voltage, two pieces are required per device
System power supply, primary-switched

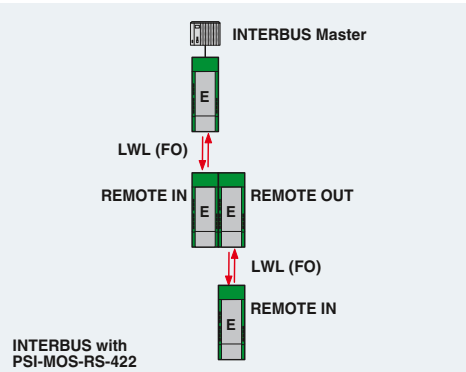

INTERBUS / RS-422 / RS-485 4-wire polymer and PCF fibers

Ex:

Technical data

18 V DC ... 30 V DC 100 mA (24 V DC)
RS-422 interface in acc. with ITU-T V.11, EIA/TIA-422, DIN 66348-1
≤ 2 Mbps ≤ 1000 m (depending on the data rate, with shielded, twisted data cable) Plug-in screw connection
F-SMA 660 nm 100 m (with F-P 980/1000 230 dB/km with quick mounting connector) 800 m (with F-K 200/230 10 dB/km with quick mounting connector)
< 1 bit 60 V DC / 42 V AC ; 0.46 A 1.5 kV_{rms} (50 Hz, 1 min.) -20°C ... 60°C 35 mm / 99 mm / 103 mm Class A product, see page 527
II 3 G Ex nA nC IIC T4 Gc X II (2) G [Ex op is Gb] IIC (PTB 06 ATEX 2042 U) II (2) D [Ex op is Db] IIIC (PTB 06 ATEX 2042 U) Class I, Zone 2, AEx nc IIC T5 Class I, zone 2, Ex nC nL IIC T5 X Class I, Div. 2, Groups A, B, C, D

Ordering data

Type	Order No.	Pcs./Pkt.
PSI-MOS-RS422/FO 660 E	2708342	1
PSI-MOS-RS422/FO 660 T	2708384	1

Accessories

ME 17,5 TBUS 1,5/PP000-3,81 BK	2890014	10
MINI-SYS-PS-100-240AC/24DC/1.5	2866983	1

INTERBUS / RS-422 / RS-485 4-wire PCF and fiberglass (multimode)

Ex:

Technical data

18 V DC ... 30 V DC 120 mA (24 V DC)
RS-422 interface in acc. with ITU-T V.11, EIA/TIA-422, DIN 66348-1
≤ 2 Mbps ≤ 1000 m (depending on the data rate, with shielded, twisted data cable) Plug-in screw connection
B-FOC (ST®) 850 nm 2800 m (with F-K 200/230 8 dB/km with quick mounting connector) 4200 m (with F-G 50/125 2.5 dB/km) 4800 m (with F-G 62.5/125 3.0 dB/km)
< 1 bit 60 V DC / 42 V AC ; 0.46 A 1.5 kV_{rms} (50 Hz, 1 min.) -20°C ... 60°C 35 mm / 99 mm / 103 mm Class A product, see page 527
II 3 G Ex nA nC IIC T4 Gc X II (2) G [Ex op is Gb] IIC (PTB 06 ATEX 2042 U) II (2) D [Ex op is Db] IIIC (PTB 06 ATEX 2042 U) Class I, Zone 2, AEx nc IIC T5 Class I, zone 2, Ex nC nL IIC T5 X Class I, Div. 2, Groups A, B, C, D

Ordering data

Type	Order No.	Pcs./Pkt.
PSI-MOS-RS422/FO 850 E	2708355	1
PSI-MOS-RS422/FO 850 T	2708397	1

Accessories

ME 17,5 TBUS 1,5/PP000-3,81 BK	2890014	10
MINI-SYS-PS-100-240AC/24DC/1.5	2866983	1

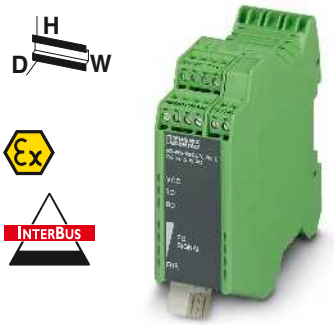

INTERBUS / RS-422 / RS-485 4-wire fiberglass (multimode and single mode)

Ex:

Technical data

18 V DC ... 32 V DC 110 mA (24 V DC)
RS-422 interface in acc. with ITU-T V.11, EIA/TIA-422, DIN 66348-1
≤ 2 Mbps ≤ 1000 m (depending on the data rate, with shielded, twisted data cable) Plug-in screw connection
SC duplex 1300 nm 27 km (with F-G 50/125 0.7 dB/km at 1300 nm) 22 km (with F-G 62.5/125 0.8 dB/km at 1300 nm) 45 km (with F-E 9/125 0.4 dB/km at 1300 nm)
< 1 bit 60 V DC / 42 V AC ; 1 A 1.5 kV_{rms} (50 Hz, 1 min.) -20°C ... 60°C 35 mm / 105 mm / 103 mm Class A product, see page 527
II 3 G Ex nA nC IIC T4 Gc X 508 Listed 508 recognized

Ordering data

Type	Order No.	Pcs./Pkt.
PSI-MOS-RS422/FO1300 E	2708575	1

Accessories

ME 17,5 TBUS 1,5/PP000-3,81 BK	2890014	10
MINI-SYS-PS-100-240AC/24DC/1.5	2866983	1

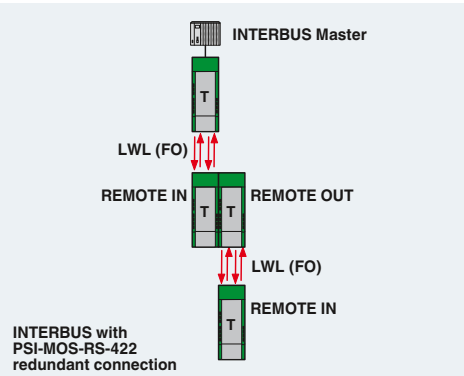

FO converters for RS-232 (V.24)

Due to its electrical properties, the RS-232 interface is very susceptible to electromagnetic interference and potential differences. For this reason, it can only be used for short distances of up to max. 15 m.

FO transmission technology is, therefore, the first choice for longer transmission distances and for eliminating electromagnetic interference.

The **PSI-MOS-RS232/FO...** devices convert the RS-232interface for fiber optics. A transparent protocol is used for conversion. If addressable RS-232 devices and a suitable communication protocol are used, even multi-point networks can be constructed. These can be implemented as linear, star, and even redundant star structures.

- Automatic data rate detection for all data rates up to 115.2 kbps
- Integrated optical diagnostics for continuous monitoring of fiber optic paths
- Floating switch contact for leading alarm generation in relation to critical fiber optic paths
- High-quality electrical isolation between all interfaces RS-232 // fiber optic ports // power supply // DIN rail connector)
- Redundant power supply supported in the form of optional system power supply
- Connections can be plugged in using a COMBICON screw terminal block
- Routing of supply voltage and data signals through DIN rail connectors
- Approved for use in zone 2
- Intrinsically safe FO interface (Ex op is) for direct connection to devices in zone 1 (all 660 and 850 nm versions)

Supply	
Supply voltage range	
Nominal current consumption	
RS-232 interface	
Transmission speed	
Transmission distance	
Connection method	
Optical interface	
Connection	
Wavelength	
Transmission distance incl. 3 dB system reserve	
General data	
Bit delay	
Alarm output	
Test voltage	
Ambient temperature range	
Dimensions	W / H / D
EMC note	
Conformance/approvals	
ATEX	
UL, USA/Canada	

Description
FO converter, for converting data signals to fiber optics - End device with one FO interface - T-coupler with two FO interfaces
DIN rail connector (optional), for routing through the supply voltage and data signal, two pieces are required per device
DIN rail connector, (optional), for routing through the supply voltage, two pieces are required per device
System power supply, primary-switched

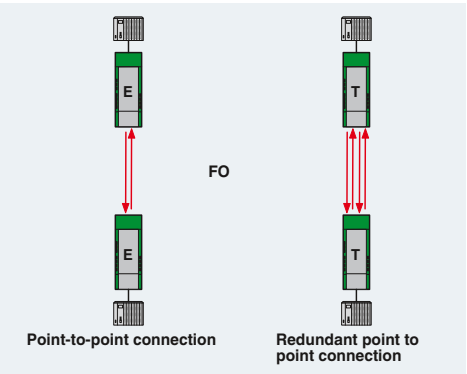

RS-232

RS-232
polymer and PCF fibers

Ex:

Technical data

	18 V DC ... 30 V DC
	100 mA (24 V DC)
	RS-232 interface in acc. with ITU-T V.28, EIA/TIA-232, DIN 66259-1
	115.2 kbps (NRZ)
	≤ 15 m
	D-SUB 9 plug
	F-SMA
	660 nm
	100 m (with F-P 980/1000 230 dB/km with quick mounting connector) 800 m (with F-K 200/230 10 dB/km with quick mounting connector)
	< 1 bit
	60 V DC / 42 V AC ; 0.46 A
	1.5 kV_{rms} (50 Hz, 1 min.)
	-20°C ... 60°C
	35 mm / 99 mm / 105 mm
	Class A product, see page 527
	II 3 G Ex nA nC IIC T4 Gc X II (2) G [Ex op is Gb] IIC (PTB 06 ATEX 2042 U) II (2) D [Ex op is Db] IIIC (PTB 06 ATEX 2042 U)
	Class I, Zone 2, AEx nc IIC T5 Class I, zone 2, Ex nC nL IIC T5 X Class I, Div. 2, Groups A, B, C, D

Ordering data

Type	Order No.	Pcs./Pkt.
PSI-MOS-RS232/FO 660 E	2708368	1
PSI-MOS-RS232/FO 660 T	2708410	1

Accessories

ME 17,5 TBUS 1,5/ 5-ST-3,81 GN	2709561	10
ME 17,5 TBUS 1,5/PP000-3,81 BK	2890014	10
MINI-SYS-PS-100-240AC/24DC/1.5	2866983	1

RS-232

RS-232
PCF and fiberglass (multimode)

Ex:

Technical data

	18 V DC ... 30 V DC
	120 mA (24 V DC)
	RS-232 interface in acc. with ITU-T V.28, EIA/TIA-232, DIN 66259-1
	115.2 kbps (NRZ)
	≤ 15 m
	D-SUB 9 plug
	B-FOC (ST®)
	850 nm
	2800 m (with F-K 200/230 8 dB/km with quick mounting connector) 4200 m (with F-G 50/125 2.5 dB/km) 4800 m (with F-G 62.5/125 3.0 dB/km)
	< 1 bit
	60 V DC / 42 V AC ; 0.46 A
	1.5 kV_{rms} (50 Hz, 1 min.)
	-20°C ... 60°C
	35 mm / 99 mm / 105 mm
	Class A product, see page 527
	II 3 G Ex nA nC IIC T4 Gc X II (2) G [Ex op is Gb] IIC (PTB 06 ATEX 2042 U) II (2) D [Ex op is Db] IIIC (PTB 06 ATEX 2042 U)
	Class I, Zone 2, AEx nc IIC T5 Class I, zone 2, Ex nC nL IIC T5 X Class I, Div. 2, Groups A, B, C, D

Ordering data

Type	Order No.	Pcs./Pkt.
PSI-MOS-RS232/FO 850 E	2708371	1
PSI-MOS-RS232/FO 850 T	2708423	1

Accessories

ME 17,5 TBUS 1,5/ 5-ST-3,81 GN	2709561	10
ME 17,5 TBUS 1,5/PP000-3,81 BK	2890014	10
MINI-SYS-PS-100-240AC/24DC/1.5	2866983	1

RS-232

RS-232
fiberglass (multimode and single mode)

Ex:

Technical data

	18 V DC ... 32 V DC
	100 mA (24 V DC)
	RS-232 interface in acc. with ITU-T V.28, EIA/TIA-232, DIN 66259-1
	115.2 kbps (NRZ)
	≤ 15 m
	D-SUB 9 plug
	SC duplex
	1300 nm
	27 km (with F-G 50/125 0.7 dB/km at 1300 nm) 22 km (with F-G 62.5/125 0.8 dB/km at 1300 nm) 45 km (with F-E 9/125 0.4 dB/km at 1300 nm)
	< 1 bit
	60 V DC / 42 V AC ; 1 A
	1.5 kV_{rms} (50 Hz, 1 min.)
	-20°C ... 60°C
	35 mm / 99 mm / 105 mm
	Class A product, see page 527
	II 3 G Ex nA nC IIC T4 Gc X
	508 Listed 508 recognized

Ordering data

Type	Order No.	Pcs./Pkt.
PSI-MOS-RS232/FO1300 E	2708588	1

Accessories

ME 17,5 TBUS 1,5/ 5-ST-3,81 GN	2709561	10
ME 17,5 TBUS 1,5/PP000-3,81 BK	2890014	10
MINI-SYS-PS-100-240AC/24DC/1.5	2866983	1

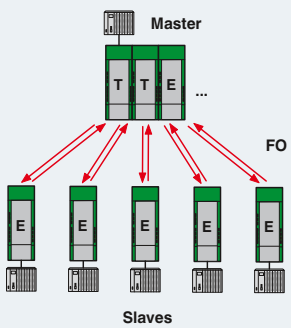

Star structure

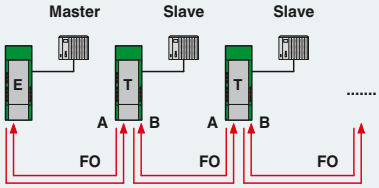

Master/Slave line structure

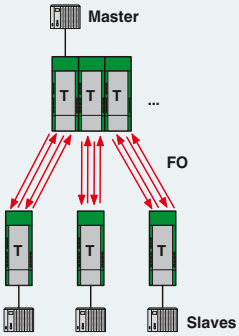

Redundant structure

Fiber optic data transmission in the industrial field has become increasingly important in recent years. In particularly critical applications with very high requirements regarding availability it has become standard. This is due to the many advantages that fiber optic data transmission has over traditional copper systems.

The main advantages are:

– Maximum resistance to interference, even when exposed to extreme electromagnetic influences
– High-quality electrical isolation between the devices
– Maximum transmission distances of several dozen kilometers with an extremely high data rate
– The maximum number of devices is not limited by the electrical properties of the communication interface used

This leads to a marked gain in performance and immunity to interference for the communication infrastructure in industrial applications, without having to allow for complex surge protection measures, shielding and equipotential bonding concepts.

Inexpensive end devices and polymer fiber cables are used for distances of up to 100 m. The cable can be self-assembled quickly using F-SMA fast connectors. The end devices transmit the light with a wavelength of 660 nm.

The optical components based on this wavelength can be produced cost-effectively. As a result, cost-effective end devices can be offered. In conjunction with cost-effective polymer fiber and the simple connection technology, this provides an attractive introduction to FO technology.

For distances of up to 800 m, the same 660 nm end devices can be used, but this time with PCF cable. This cable can also be self-assembled with fast connectors. All that is required is a special tool for stripping as well as cutting the optical fibers.

If you wish to cover distances of up to 2800 m with PCF cables and fast connection technology, you must use end devices with powerful optical components featuring 850 nm technology. End devices equipped with this technology can cover distances of up to 4800 m when using multimode fiberglass.

In many applications, such as tunnel construction or transportation technology, even these distances are not long enough. In this case, end devices with optical interfaces with 1300 nm technology, which are designed for maximum performance, come into play. With multimode fiberglass, these devices can cover distances of up to 25 km and, using single mode fiberglass (often referred to as monomode fiberglass), even distances of up to 45 km.

Cables – By the meter

Phoenix Contact cables and connection systems offer solutions for various fields of application.

– Polymer Optical Fiber (POF): Up to a maximum of 100 Mbps
– Polymer-Cladded Fiber (PCF): Up to a maximum of 1 Gbps
– Glass Optical Fiber (GOF) multimode: Up to 10 Gbps
– Glass Optical Fiber (GOF) single mode: Up to 40 Gbps

Your web code: #1516

Cables – Assembled

Implement flexible, consistent data transmission solutions based on our comprehensive range of standardized FO connectors.

– Compact LC duplex connectors
– SC-RJ with push-pull technology for POF, PCF, and GOF
– Established F-SMA and ST connectors

Your web code: #0524

Fixed patch cables

The patch cables have a robust design for industrial use. The strong outer sheath and connector transitions with bending protection sleeve mean that they can be safely used inside control cabinets.

– Pre-assembled patch cables for fast integration of fiber optic devices into existing fiber optic networks
– For the SC-RJ, SC duplex, LC, and B-FOC (ST®) connector formats
– Single and multimode fiberglass in lengths of one, two, and five meters

Your web code: #0526

Assembly tools

Assemble fiber optic cables directly in the field. The assembly tools from Phoenix Contact enable reliable connection in next to no time.

– Tools for all fiber types
– No bonding or polishing, thanks to mechanical splice
– Tool sets with practical accessories

Your web code: #1515

Connectors

These connectors are easy to assemble and allow fast and simple self-assembly on site. They correspond to the international F-SMA, B-FOC (ST®), SC-RJ, and SC duplex standards, though their quick mounting mechanism makes them stand out from the conventional connectors.

The tools required are available as a complete assembly case for polymer and HCS fibers.

Your web code: #0493

Couplings

Couplings connect FO connectors with the same pin arrangement. Couplings are also used when a cable needs to be extended or when creating a non-permanent panel feed-through.

The sets include two F-SMA couplings or two B-FOC (ST®) couplings for connecting duplex cables.

The SC-RJ duplex, SC duplex, and LC couplings are supplied separately.

Your web code: #1514

PROFIBUS cables and fast connection tool for SUBCON-PLUS-PROFIBUS

If the Fast Connect cable PSM-CABLE-PROFIB/FC is used, work is reduced to a minimum by using the quick stripping tool, **PSM-STRIP-FC/PROFIB**:

– Strip cable and single wires
– Insert in the connector
– Close the housing cover

PROFIBUS cable, type Fast Connect

Quick stripping tool for SUBCON-PLUS-PROFIBUS connectors

	Technical data	Technical data
General data		
External cable diameter	8 mm ±0.4 mm	-
Ambient temperature (operation)	-40°C ... 60°C	-
Loop resistance	≤ 110.00 Ω/km	-
Cable capacity	approx. 28.5 nF/km (at 1 kHz)	-
Cable impedance	150 Ω ±10% (3 ... 20 MHz)	-
Conductor material	Bare Cu wire	-
AWG signal line	22	-
Cable cross section	2x 0.34 mm²	-
Outer sheath, material	PVC FR VI	-
Outer sheath, color	Violet	-
Flame resistance	in accordance with IEC 60332-3-24 (Cat. C) in accordance with CMG FT4	-
Resistance to oil	Limited resistance to mineral oils and greases in accordance with IEC 60811-2-1, 4 h at 70°C	-
Cable type	PROFIBUS in acc. with IEC 61158, Type A	-

Description	Ordering data: Type	Order No.	Pcs./Pkt.	Ordering data: Type	Order No.	Pcs./Pkt.
PROFIBUS cable, Fast Connect type, up to 12 Mbps, for permanent connection (02YSY (ST)CY 1X2X22 AWG) (Length in meters as per customer specifications)	PSM-CABLE-PROFIB/FC	2744652	1			
Quick stripping tool for PROFIBUS cable, Fast Connect type				PSM-STRIP-FC/PROFIB	2744623	1
Accessories						
Replacement knife block for quick stripping tool blue				PSM-STRIP-KNIFEBLOCK	2744636	1
Stripping tool, for conductors and cables black	QUICK WIREFOX 6	1204384	1	QUICK WIREFOX 6	1204384	1

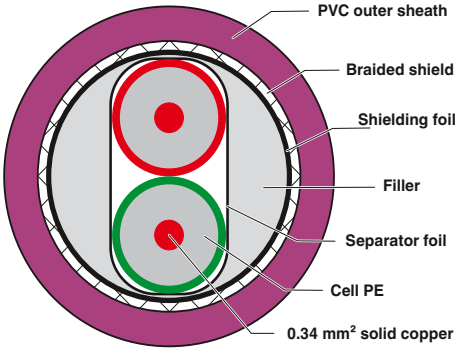

RS-485 connection distributor

If spur connections or a star distribution are to be made in a bus system, the RS-485 connection distributors come to your aid.

PSM-PTK, the DIN rail-mountable T-adapter equipped with three 9-pin 1:1 connected D-SUB connections, makes for clear and tidy wiring with just one spur connection.

As many as four branch lines can be picked off from one bus line in the PSM-PTK 4 version. Here too, all six D-SUB connections (9-pos.) are connected through 1:1. Both versions are mounted by snapping them onto conventional EN DIN rails.

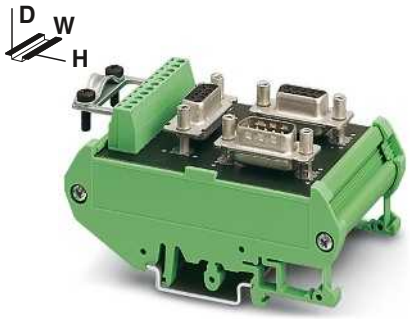

RS-485 T-distributor (4-way), D-SUB and screw connection

RS-485 T-distributor (6-way), D-SUB connection

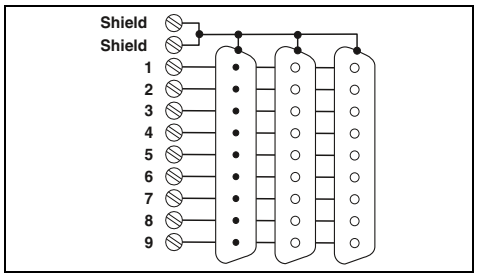

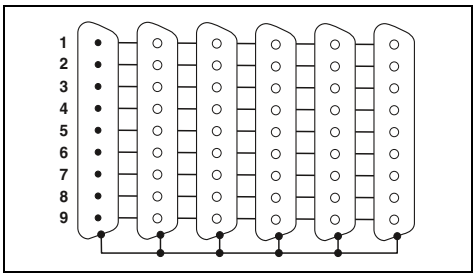

		Technical data	Technical data
General data			
Plug connection	Incoming	D-SUB 9 male connector	D-SUB 9 male connector
	Outgoing	D-SUB-9 female connector	D-SUB-9 female connector
	Branching	D-SUB-9 female connector	4 x D-SUB-9 female connector
		COMBICON connector	-
Nominal voltage U_N		60 V AC/DC	60 V AC/DC
Nominal current I_N		1 A	1 A
Test voltage		500 V AC (50 Hz, 1 min, rms)	500 V AC (50 Hz, 1 min, rms)
Shield connection		D-SUB frame or shield clip	D-SUB frame
Connection cross section rigid / flexible / AWG		0.14 - 1.5 mm^2 / 0.14 - 1.5 mm^2 / 26 - 16	-
Torque		0.4 Nm	-
Ambient temperature (operation)		-25°C ... 70°C	-25°C ... 70°C
Housing material		PVC	PVC
Pin assignment		all 1:1	all 1:1
Dimensions W/H/D		56 mm / 89.6 mm / 48 mm	89.8 mm / 89.6 mm / 39 mm

	Ordering data			Ordering data		
Description	Type	Order No.	Pcs./Pkt.	Type	Order No.	Pcs./Pkt.
Passive RS-485 T-distributor, fitted with a 9 pos. D-SUB male connector and **two** 9-pos. D-SUB female connectors, as well as a 9-pos. PCB terminal block with shield clip.	**PSM PTK**	2760623	1			
Passive RS-485 T-distributor, fitted with one 9-pos. D-SUB male connector and **five** 9-pos. D-SUB female connectors				**PSM PTK-4**	2799364	1

	Accessories			Accessories		
Screwdriver	**SZS 0,4X2,5 VDE**	1205037	10	**SZS 0,4X2,5 VDE**	1205037	10

SUBCON-PLUS-M12 fast connection

The SUBCON-PLUS fast connectors with M12 connection ensure error-free installation of bus systems, thanks to the use of fully-tested components such as cables and connectors.

The innovative housing concept is lightweight yet offers optimum mechanical protection against environmental influences. This means that the fast connection plugs are ideal, even in applications subject to vibration.

The unique SPEEDCON fast locking system on the M12 connections offers reliable connection with just half a turn.

Features:

- Easy startup, plug and play
- Lightweight
- Termination using M12 termination resistor
- Adapter between IP20 and IP67 environments
- For PROFIBUS and CANopen® systems

Advantages:

- Direct connection of M12 cables
- Complete range with versions for every application
- Problem-free installation, thanks to 100% tested individual components
- Fully molded housing
- M12-SPEEDCON locking, connected securely with just half a turn

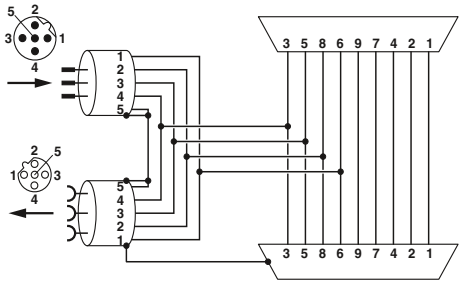

SUBCON-PLUS-PROFIB/...M12 function block diagram

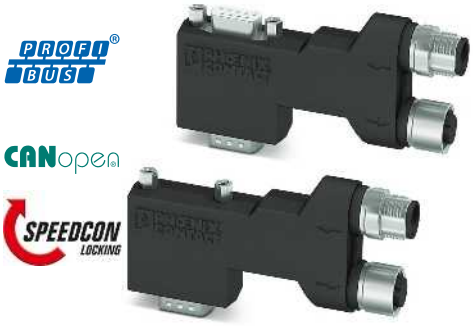

90° version, long, suitable for Siemens S7

Technical data

General data	
Cable entry	90° (left)
Ambient temperature (operation)	-30°C ... 80°C
Degree of protection	IP40
Housing material	Polyamide
Number of positions	5
Termination resistor	separately via M12 termination resistor
SUBCON fixing	4-40 UNC 0.4 Nm
Dimensions W / H / D	16 mm / 41 mm / 93 mm

Ordering data

Description	Type	Order No.	Pcs./Pkt.
Fast connection plugs, for PROFIBUS systems, Pin assignment 3, 5, 6, 8			
- Standard version	SUBCON-PLUS-PROFIB/90X/M12	2902729	1
- Pg version with programming connection	SUBCON-PLUS-PROFIB/90X/PG/M12	2902728	1
Fast connection plugs, for CAN-based systems, Pin assignment 2, 3, 5, 7, 9			
- Standard version	SUBCON-PLUS-CAN/90X/M12	2902731	1
- Pg version with programming connection	SUBCON-PLUS-CAN/90X/PG/M12	2902730	1

Accessories

Termination resistor, M12 plug			
- PROFIBUS	SAC-5P-M12MS PB TR	1507803	5
- M12 socket design	SAC-5P-M12FS PB TR	1403911	5
Bus cable PROFIBUS, straight socket, shielded, M12 B-coded, 2-pos., straight pin, shielded, M12 B-coded, 2-pos.			
- Cable length 1 m	SAC-2P-MSB/ 1,0-910/FSB SCO	1518122	1
- Variable cable length	SAC-2P-MSB-FSB SCO/910/...	1538092	1
Termination resistor, M12 plug			
- DeviceNet™/CANopen®	SAC-5P-M12MS CAN TR	1507816	5
- M12 socket design	SAC-5P-M12FS CAN TR	1529344	5
Bus cable DeviceNet™/CANopen, straight socket, shielded, M12 A-coded, 5-pos., straight pin, shielded, M12 A-coded, 5-pos.			
- Cable length 1 m	SAC-5P-MS/ 1,0-920/FS SCO	1518274	1
- Variable cable length	SAC-5P-MS-FS SCO/920/...	1538157	1

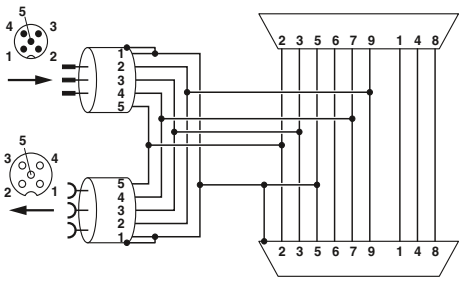

SUBCON-PLUS-CAN/...M12 function block diagram

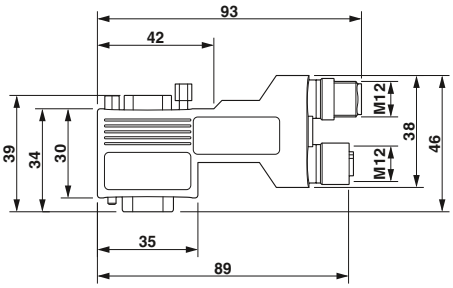

SUBCON-PLUS...90X...M12 dimensional drawing, long 90° version

90° version, short, universal

35° version, universal

Axial version, universal

Technical data

90° (left)
-30°C ... 80°C
IP40
Polyamide
5
separately via M12 termination resistor
4-40 UNC 0.4 Nm
16 mm / 40 mm / 71 mm

Ordering data

Type	Order No.	Pcs./Pkt.
SUBCON-PLUS-PROFIB/90/M12	2902318	1
SUBCON-PLUS-PROFIB/90/PG/M12	2902317	1
SUBCON-PLUS-CAN/90/M12	2902323	1
SUBCON-PLUS-CAN/90/PG/M12	2902322	1

Accessories

SAC-5P-M12MS PB TR	1507803	5
SAC-5P-M12FS PB TR	1403911	5
SAC-2P-MSB/ 1,0-910/FSB SCO	1518122	1
SAC-2P-MSB-FSB SCO/910/...	1538092	1
SAC-5P-M12MS CAN TR	1507816	5
SAC-5P-M12FS CAN TR	1529344	5
SAC-5P-MS/ 1,0-920/FS SCO	1518274	1
SAC-5P-MS-FS SCO/920/...	1538157	1

Technical data

35° (left)
-30°C ... 80°C
IP40
Polyamide
5
separately via M12 termination resistor
4-40 UNC 0.4 Nm
16 mm / 46 mm / 79 mm

Ordering data

Type	Order No.	Pcs./Pkt.
SUBCON-PLUS-PROFIB/35/M12	2902320	1
SUBCON-PLUS-PROFIB/35/PG/M12	2902319	1
SUBCON-PLUS-CAN/35/M12	2902325	1
SUBCON-PLUS-CAN/35/PG/M12	2902324	1

Accessories

SAC-5P-M12MS PB TR	1507803	5
SAC-5P-M12FS PB TR	1403911	5
SAC-2P-MSB/ 1,0-910/FSB SCO	1518122	1
SAC-2P-MSB-FSB SCO/910/...	1538092	1
SAC-5P-M12MS CAN TR	1507816	5
SAC-5P-M12FS CAN TR	1529344	5
SAC-5P-MS/ 1,0-920/FS SCO	1518274	1
SAC-5P-MS-FS SCO/920/...	1538157	1

Technical data

180° (axial)
-30°C ... 80°C
IP40
Polyamide
5
separately via M12 termination resistor
4-40 UNC 0.4 Nm
16 mm / 75 mm / 38 mm

Ordering data

Type	Order No.	Pcs./Pkt.
SUBCON-PLUS-PROFIB/AX/M12	2902321	1
SUBCON-PLUS-CAN/AX/M12	2902326	1

Accessories

SAC-5P-M12MS PB TR	1507803	5
SAC-5P-M12FS PB TR	1403911	5
SAC-2P-MSB/ 1,0-910/FSB SCO	1518122	1
SAC-2P-MSB-FSB SCO/910/...	1538092	1
SAC-5P-M12MS CAN TR	1507816	5
SAC-5P-M12FS CAN TR	1529344	5
SAC-5P-MS/ 1,0-920/FS SCO	1518274	1
SAC-5P-MS-FS SCO/920/...	1538157	1

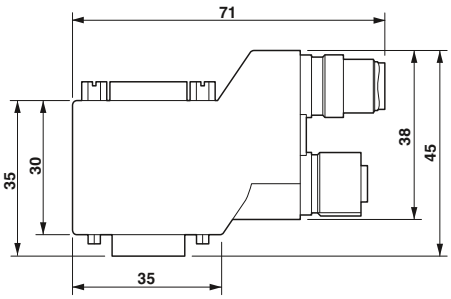

SUBCON-PLUS...90...M12 dimensional drawing, short 90° version

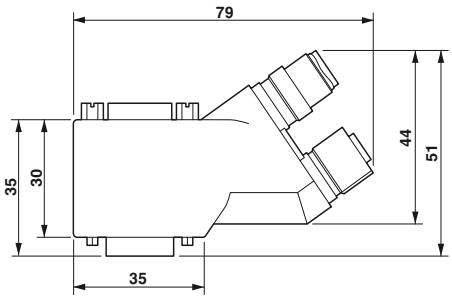

SUBCON-PLUS...35...M12 dimensional drawing, 35° version

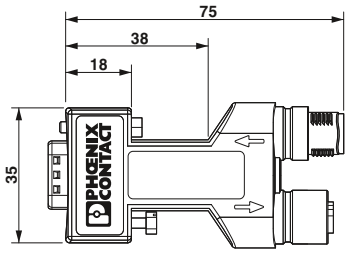

SUBCON-PLUS...AX...M12 dimensional drawing, axial (180°) version

SUBCON-PLUS-PROFIBUS
D-SUB fast connection

PROFIBUS connectors with fast connection

The D-SUB series, **SUBCON-PLUS-PROFIB/...** was specially designed for use in PROFIBUS systems up to 12 Mbps. Under field conditions, it allows convenient and fast connection of the incoming and outgoing bus cable.

The product range includes nine fast connectors – the perfect solution for every PROFIBUS application:
– 35° and 90° angled cable entry
– Axial cable entry
– With an additional programming interface
– Integrated surge protection

The connectors can be used for PROFIBUS cables with solid as well as flexible copper wires.

The termination resistor is already integrated in all versions. It can be connected externally by means of a slide switch. At the same time, the outgoing bus segment is switched off. This makes it easy to start up segment by segment while incorrect terminations are avoided.

In addition, the connector housing with high-quality shielding guarantees high immunity to interference even at maximum transmission speeds.

A special feature of the 35° angled connector is that the internal connection unit can be turned round. Whether the cable is to be inserted from the right or left can thus be decided on-site.

If it is not possible to use the angled version, the SUBCON-PLUS.../AX compact connector with axial cable entry can be used instead.

The connectors are designed to be used for all standard PROFIBUS cables with 8 mm external diameter (types A and B).

35° PROFIBUS connector, screw connection, reversible cable entry

Ex:

Technical data

General data	
Cable entry	35° (right or left)
Connection cross section rigid / flexible / AWG	0.14 - 1.5 mm² / 0.14 - 1 mm² / 26 - 16
Insertion/withdrawal cycles	> 200
Cable cross section (max./min.)	8.4 mm / 7.6 mm
Ambient temperature (operation)	-20°C ... 75°C
Degree of protection	IP40
Housing material	ABS, metal-plated
Termination resistor	390 Ω / 220 Ω / 390 Ω (can be connected externally)
SUBCON fixing	4-40 UNC 0.4 Nm

Ordering data

Description	Type	Order No.	Pcs./Pkt.
PROFIBUS connector, up to 12 Mbps, integrated termination resistor which can be activated externally, 9-pos. male connector, pin assignment 3, 5, 6, 8			
- Angled 35°, screw connection	**SUBCON-PLUS-PROFIB/SC2**	2708232	1
- Angled 35°, screw connection with second D-SUB female connector	**SUBCON-PLUS-PROFIB/PG/SC2**	2708245	1
- Angled 35°, screw connection, with surge protection	**D-UFB-PB**	2880642	1
- Angled 90°, screw connection			
- Angled 90°, screw connection with second D-SUB female connector			
- Angled 90°, IDC connection			
- Angled 90°, IDC connection with second D-SUB female connector			
- Axial cable entry, screw connection			
- Axial cable entry, spring connection			

Accessories

PROFIBUS cable, Fast Connect type, up to 12 Mbps, for permanent connection (02YSY (ST)CY 1X2X22 AWG) (length in meters as per customer specifications)	**PSM-CABLE-PROFIB/FC**	2744652	1
Quick stripping tool for PROFIBUS cable, Fast Connect type	**PSM-STRIP-FC/PROFIB**	2744623	1

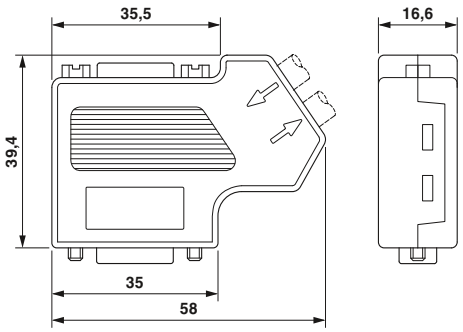

90° PROFIBUS connector, screw connection

Ex:

Technical data

90° (left)
0.14 - 1.5 mm² / 0.14 - 1 mm² / 26 - 16
> 200
8.4 mm / 7.6 mm
-20°C ... 75°C
IP40
ABS, metal-plated
390 Ω / 220 Ω / 390 Ω (can be connected externally)
4-40 UNC 0.4 Nm

Ordering data

Type	Order No.	Pcs./Pkt.
SUBCON-PLUS-PROFIB/90/SC	2313698	1
SUBCON-PLUS-PROFIB/90/PG/SC	2313708	1

Accessories

PSM-CABLE-PROFIB/FC	2744652	1
PSM-STRIP-FC/PROFIB	2744623	1

90° PROFIBUS connector, IDC insulation displacement connection method

Technical data

90° (left)
0.32 - 1 mm² / 0.32 - 1 mm² / 22 - 18
> 200
8.4 mm / 7.6 mm
-20°C ... 75°C
IP40
ABS, metal-plated
390 Ω / 220 Ω / 390 Ω (can be connected externally)
4-40 UNC 0.4 Nm

Ordering data

Type	Order No.	Pcs./Pkt.
SUBCON-PLUS-PROFIB/90/IDC	2313672	1
SUBCON-PLUS-PROFIB/90/PG/IDC	2313685	1

Accessories

PSM-CABLE-PROFIB/FC	2744652	1
PSM-STRIP-FC/PROFIB	2744623	1

Axial PROFIBUS connector, screw or spring connection

Technical data

180° (axial)
0.14 - 1.5 mm² / 0.14 - 1 mm² / 26 - 16
> 200
8.4 mm / 7.6 mm
-20°C ... 75°C
IP30
ABS, metal-plated
390 Ω / 220 Ω / 390 Ω (can be connected externally)
4-40 UNC 0.4 Nm

Ordering data

Type	Order No.	Pcs./Pkt.
SUBCON-PLUS-PROFIB/AX/SC	2744380	1
SUBCON-PLUS-PROFIB/AX	2744377	1

Accessories

PSM-CABLE-PROFIB/FC	2744652	1
PSM-STRIP-FC/PROFIB	2744623	1

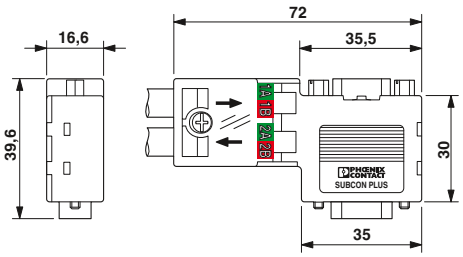

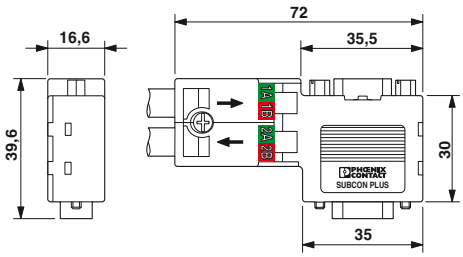

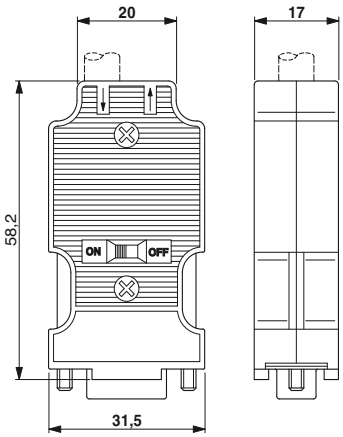

SUBCON-PLUS-CAN
D-SUB fast connection

The **SUBCON-PLUS-CAN/...** D-SUB series is specifically designed for use in CAN systems. Under field conditions, it enables the quick and easy connection of the incoming and outgoing bus line.

The termination resistor is already integrated in all versions. It can be connected externally by means of a slide switch. At the same time, the outgoing bus segment is switched off. This makes it easy to start up segment by segment while incorrect terminations are avoided. In addition, the connector housing with high-quality shielding guarantees high immunity to interference even at maximum transmission speeds.

A special feature of the angled connector is that the internal connection unit can be turned round. Whether the cable is to be inserted from the right or left can thus be decided on site.

If the angled version cannot be used, the **SUBCON-PLUS-CAN/AX** compact connector with axial cable entry can be used instead.

Features:
- Assembly under field conditions
- Separate terminal blocks for bus cables
- Termination resistor can be connected
- Segment-by-segment startup
- High transmission speed
- High level of EMC
- Flexibility in terms of cable entry selection
- Suitable for bus cables in accordance with CiA Draft Recommendation 303-1 with an outside diameter of 8 mm
- A version with variable cable entry is available for special cables

Versions:
- Angled with programming interface
- Angled without programming interface
- Axial cable entry

35° D-SUB connector (socket), screw connection, two cable entries

Ex:

Technical data

General data	
Cable entry	35° (right or left)
Pin assignment	2, 3, 7, 9
Nominal voltage U_N	5 V
Nominal current I_N	100 mA
Connection cross section rigid / flexible / AWG	0.14 - 1.5 mm² / 0.14 - 1 mm² / 26 - 16
Insertion/withdrawal cycles	> 200
Cable cross section (max./min.)	8.4 mm / 7.6 mm
Ambient temperature (operation)	-20°C ... 75°C
Degree of protection	IP40
Housing material	ABS, metal-plated
Termination resistor	120 Ω (can be connected externally)
SUBCON fixing	4-40 UNC 0.4 Nm

Ordering data

Description	Type	Order No.	Pcs./Pkt.
CAN, CANopen, SafetyBUS p connector, integrated termination resistor that can be activated from the outside, with screw connection, 9-pos., socket			
- Angled 35°	**SUBCON-PLUS-CAN/SC2**	2708999	1
- Angled 35°, with second D-SUB connection	**SUBCON-PLUS-CAN/PG**	2708119	1
- Angled 35°, for variable cable diameters			
CAN, CANopen, SafetyBUS p connector, integrated termination resistor that can be activated from the outside, with screw connection, 9-pos., socket			
- Axial cable entry			

Accessories

Screwdriver	**SZS 0,4X2,5 VDE**	1205037	10

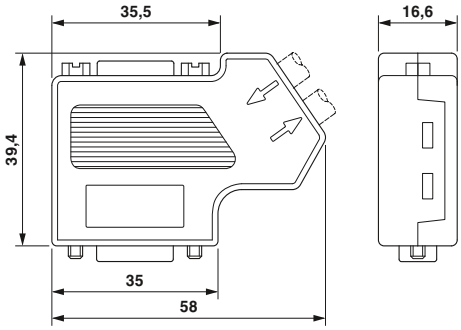

35° D-SUB connector (socket), variable cable diameter

Ex:

Technical data

35° (right or left)
2, 3, 7
5 V
100 mA
0.14 - 1.5 mm² / 0.14 - 1 mm² / 26 - 16
> 200
10 mm / 6 mm
-20°C ... 75°C
IP40
ABS, metal-plated
120 Ω (can be connected externally)
4-40 UNC 0.4 Nm

Ordering data

Type	Order No.	Pcs./Pkt.
SUBCON-PLUS-CAN	2744694	1

Accessories

SZS 0,4X2,5 VDE	1205037	10

Axial D-SUB connector (socket), two cable entries

Technical data

180° (axial)
2, 3, 7
5 V
100 mA
0.14 - 0.5 mm² / 0.14 - 0.5 mm² / 26 - 20
> 200
8.4 mm / 7.6 mm
-20°C ... 75°C
IP30
ABS, metal-plated
120 Ω (can be connected externally)
4-40 UNC 0.4 Nm

Ordering data

Type	Order No.	Pcs./Pkt.
SUBCON-PLUS-CAN/AX	2306566	1

Accessories

SZS 0,4X2,5 VDE	1205037	10

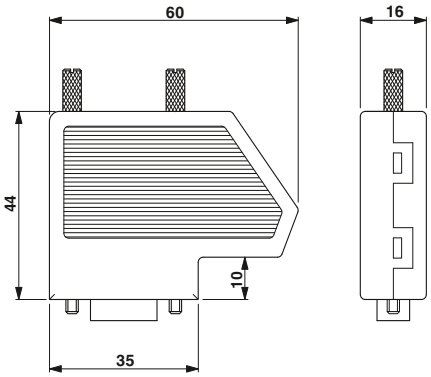

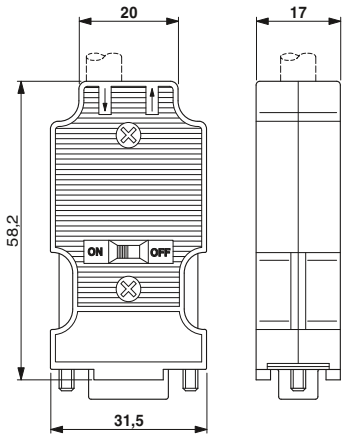

SUBCON-PLUS
D-SUB fast connection

Fieldbus connector with screw connection

Two cable entries are often required on the D-SUB connectors used in order to set up fieldbus systems with RS-485 interfaces. The SUBCON-PLUS connector range satisfies this requirement and routes the connection to screw terminal blocks – however, duplicated – for two cables. This means clarity during wiring and it simplifies every startup. These connectors are of course also shielded against electromagnetic interference by metal-plated housing.
In addition, by placing the connection block in either the upper or lower shell, it is possible to select the cable entry on site from the right or left.

Features:

- For universal use
- Assembly under field conditions
- Separate terminal blocks for each cable
- High transmission speed
- High level of EMC
- Flexibility in terms of cable entry selection
- Straightforward assembly, thanks to knurled screws

Versions:

- Bus-specific types with matching partial assignment
- Universal type with full assignment
- Short mounting screw as an accessory for when space is at a premium

RS-485

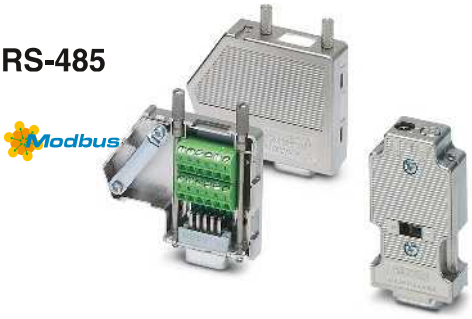

With two cable entries, 35° angled and axial

Ex:

Technical data

General data	
Nominal voltage U_N	50 V
Nominal current I_N	100 mA
Connection cross section rigid / flexible / AWG	0.14 - 1.5 mm² / 0.14 - 1 mm² / 26 - 16
Insertion/withdrawal cycles	> 200
Cable cross section (max./min.)	10 mm / 6 mm
Ambient temperature (operation)	-20°C ... 75°C
Degree of protection	IP20
Housing material	ABS, metal-plated
SUBCON fixing	4-40 UNC 0.4 Nm

Ordering data

Description	Type	Order No.	Pcs./Pkt.
D-SUB connector, with **two** cable entries for MODBUS, MODBUS-PLUS, BITBUS, ARCNET, MULT/MININET (B&R), SYSTEM 2003 (B&R), P-NET, pin assignment 1,2,3,5,6,8			
- Angled 35°, 9-pos., pin	**SUBCON-PLUS M1**	2761826	1
- Angled 35°, 9-pos., socket	**SUBCON-PLUS F1**	2744267	1
D-SUB connector, with **two** cable entries for SUCONET K1, K2 (EATON/Moeller), S-BUS (Saia), J-BUS (Merlin Gerin), pin assignment 2, 3, 4, 5, 7, 9			
- Angled 35°, 9-pos., pin	**SUBCON-PLUS M2**	2761839	1
- Angled 35°, 9-pos., socket	**SUBCON-PLUS F2**	2799490	1
D-SUB plug, with **two** cable entries, **universal type**, pin assignment 1,2,3,4,5,6,7,8,9 on **every** screw terminal block			
- Angled 35°, 9-pos., pin	**SUBCON-PLUS 9/M**	2744018	1
- Angled 35°, 9-pos., socket	**SUBCON-PLUS 9/F**	2744241	1
- Axial, 9-pos., pin	**SUBCON-PLUS-M/AX 9**	2904467	1
- Axial, 9-pos., socket	**SUBCON-PLUS-F/AX 9**	2311797	1

Accessories

Optional mounting screw, short (without knurl)	**SUBCON-SHORT-SCREW**	2799694	1
Screwdriver	**SZS 0,4X2,5 VDE**	1205037	10

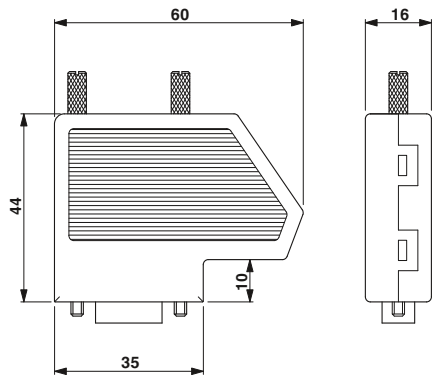

Dimensional drawing SUBCON-PLUS...

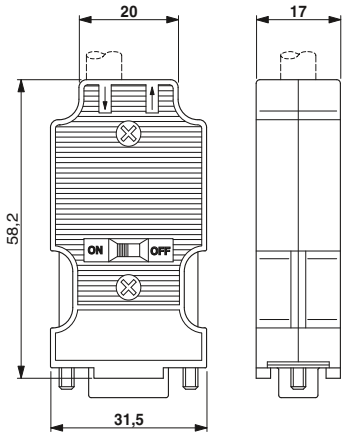

Dimensional drawing SUBCON-PLUS-.../AX...

SUBCON
D-SUB fast connection

The 9-pos. version of the SUBCON-... connector range is not just suitable for INTERBUS, but is positively ideal. A whole host of further applications are opened up by having all the connections assigned to their own 1 mm² screw terminal block.

The range includes SUBCON connectors for point-to-point connections with cable entry in 9-, 15-, and 25-pos. pin or socket versions.

Installing the connection block either in the upper or lower shell makes it possible to introduce the cable at an angle of 0° to 90° from the right or the left. The fully metal-plated housing also ensures a high degree of shielding against electromagnetic interference.

The optional fastening screw SUBCON-SHORT-SCREW is available as an accessory for narrow installation conditions. The screw is completely integrated into the housing by not having a knurl.

Features:
- For universal use
- Assembly under field conditions
- High level of EMC
- Flexibility in terms of cable entry selection
- Straightforward assembly, thanks to knurled screws

Versions:
- 9-, 15-, and 25-pos. versions
- Short mounting screw as an accessory for when space is at a premium

With one cable entry

Ex:

Technical data

General data	
Cable entry	35° (right or left)
Pin assignment	All connections are 1:1 on the screw terminal block
Nominal voltage U_N	50 V
Nominal current I_N	100 mA
Connection cross section rigid / flexible / AWG	0.14 - 1.5 mm² / 0.14 - 1 mm² / 26 - 16
Insertion/withdrawal cycles	> 200
Cable cross section (max./min.)	10 mm / 4 mm
Ambient temperature (operation)	-20°C ... 75°C
Degree of protection	IP20
Housing material	ABS, metal-plated
SUBCON fixing	4-40 UNC 0.4 Nm

Ordering data

Description	Type	Order No.	Pcs./Pkt.
D-SUB connector, with screw connection			
- 9-pos., socket	**SUBCON 9/F-SH**	2761499	1
- 9-pos., pin	**SUBCON 9/M-SH**	2761509	1
D-SUB connector, with screw connection			
- 15-pos., socket	**SUBCON 15/F-SH**	2761596	1
- 15-pos., pin	**SUBCON 15/M-SH**	2761606	1
D-SUB connector, with screw connection			
- 25-pos., socket	**SUBCON 25/F-SH**	2761619	1
- 25-pos., pin	**SUBCON 25/M-SH**	2761622	1

Accessories

Optional mounting screw, short (without knurl)	**SUBCON-SHORT-SCREW**	2799694	1
Screwdriver	**SZS 0,4X2,5 VDE**	1205037	10

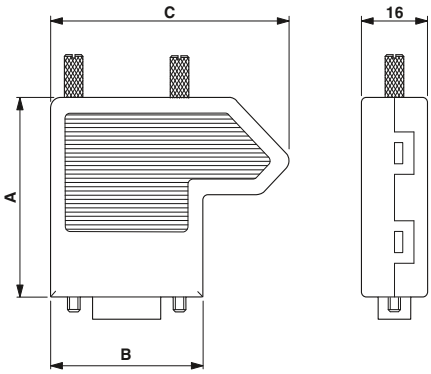

Dimensional drawing SUBCON...-SH

Dimensions of the D-SUB connectors (SUBCON)

	A [mm]	B [mm]	C [mm]
9-pos.	44.5	36.0	56.4
15-pos.	44.5	44.3	64.7
25-pos.	49.5	58.0	78.7

Field junction boxes

The FB... product range was designed specifically to meet the tough requirements of the process environment. This includes various approvals for installation in Zone 2 or Division 2 hazardous locations.

The FB... range of modular fieldbus components offers connectivity from the process controller to the field devices. Together with redundant power supply, surge protection, and cable sets, a complete connection architecture is provided.

The product range includes device couplers for use with both FOUNDATION Fieldbus and PROFIBUS PA.These couplers provide short-circuit protection to ensure that a fault on a spur does not disrupt the entire segment. They also offer energy limited outputs, intrinsic safety and galvanic isolation.

Based on the T-bus connection system, the field components are hot-swappable and allow easy system expansion. Single-loop-integrity can be acheived by connection of a single module to a single instrument. With the limited width on the rail, the size and weight of the associated field enclosure is minimized.

Also available are redundant and simplex power supplies. Each galvanically isolated supply provides power while allowing digital communications to one segment.

All components include built-in status LEDs. Integrated termination resistors in the power supplies, together with a connector-mounted version in the field, reduce the opportunity for segment termination error.

Field junction boxes

- Designed specifically for field device coupler systems
- Bus bar and shield clamps
- Entries for trunk in, trunk out and breather connections
- Each enclosure is equipped with M20 ports and can be configured as desired
- Cable glands, plugs and breather ordered separately

10" x 10"

14" x 12"

		10" x 10"	14" x 12"
		Ex:	Ex:
		Technical data	**Technical data**
General data			
Housing material		Stainless steel	Stainless steel
Dimensions	W / H / D	254 mm / 254 mm / 127 mm	355.6 mm / 304.8 mm / 127 mm
Weight		4640 g	6540 g
Degree of protection		IP66	IP66
Ambient temperature (operation)		-40°C ... 70°C	-40°C ... 70°C
Conformance/approvals			
ATEX		DEMKO 16ATEX1704X II 3 G D Ex nA [ic] IIC T4 Gc, Ex nA nC [ic] IIC T4 Gc Ex ic IIC T4 Gc, FISCO ic spurs Ex tc IIIC T135 Dc IP66	DEMKO 16ATEX1704X II 3 G D Ex nA [ic] IIC T4 Gc, Ex nA nC [ic] IIC T4 Gc Ex ic IIC T4 Gc, FISCO ic spurs Ex tc IIIC T135 Dc IP66
IECEx		IECEx UL 16.0079X Ex nA [ic] IIC T4 Gc, Ex nA nC [ic] IIC T4 Gc Ex ic IIC T4 Gc, FISCO ic spurs Ex tc IIIC T135 Dc IP66	IECEx UL 16.0079X Ex nA [ic] IIC T4 Gc, Ex nA nC [ic] IIC T4 Gc Ex ic IIC T4 Gc, FISCO ic spurs Ex tc IIIC T135 Dc IP66
UL, USA/Canada		Class I, Zone 2, AEx nA [ic] IIC T4 Gc, AEx nA nC[ic] IIC T4 Gc Entity/FISCO spurs Class I, Div. 2, Groups A, B, C, D, T4 Class I, Zone 22, AEx tc IIIC T135 Dc IP66	Class I, Zone 2, AEx nA [ic] IIC T4 Gc, AEx nA nC[ic] IIC T4 Gc Entity/FISCO spurs Class I, Div. 2, Groups A, B, C, D, T4 Class I, Zone 22, AEx tc IIIC T135 Dc IP66

	Ordering data			**Ordering data**		
Description	**Type**	**Order No.**	Pcs./Pkt.	**Type**	**Order No.**	Pcs./Pkt.
Enclosure, stainless steel, with ten ports for use in hazardous locations, includes six-spur block device coupler (FB-6SP)						
- includes three terminal blocks for trunk cable connection (+, -, S)	**FB1-S1-6SP-T-0-10-00-0-0**	2316420	1			
- includes PLUGTRAB surge base (PT 4+F-BE) for trunk cable connection (+, -, S)	**FB1-S1-6SP-S-0-10-00-0-0**	2316446	1			
Enclosure, stainless steel, with 16 ports for use in hazardous locations, includes 12-spur block device coupler (FB-12SP)						
- includes three terminal blocks for trunk cable connection (+, -, S)				**FB2-S1-12SP-T-0-16-00-0-0**	2316417	1
- includes PLUGTRAB surge base (PT 4+F-BE) for trunk cable connection (+, -, S)				**FB2-S1-12SP-S-0-16-00-0-0**	2316433	1

	Accessories			**Accessories**		
Cable gland, M20, includes nut	**FB-M-KV-M20-EX**	2900197	1	**FB-M-KV-M20-EX**	2900197	1
Stopping plug, M20, includes nut	**FB-M-BS-M20-EX**	2900209	10	**FB-M-BS-M20-EX**	2900209	10
Breather plug, M20, includes nut	**FB-M-BD-M20-EX**	2901859	1	**FB-M-BD-M20-EX**	2901859	1

Device couplers for the field

The fieldbus device couplers are suitable for FOUNDATION Fieldbus and PROFIBUS PA. They provide an interface between the fieldbus trunk line and field devices. The compact width on the DIN rail reduces the required dimensions and weight of the field housing.

FB-ET/E

- Connects to the trunk and provides voltage limiting
- Includes a pre-installed external termination resistor, ensuring termination is always available
- Diagnostic LEDs include DC OK, low voltage warning, and communication on the segment

FB-2SP/E and FB-ISO

- Hot-swappable and scalable
- Single-sided connector configuration simplifies wiring in field housing
- Diagnostic LEDs indicate DC OK and errors at the spur connection

For FB-ISO device only

- Comprehensive channel-to-channel galvanic isolation
- Provides an intrinsically safe, FISCO connection

FB-2SP/24DC

- Isolator with terminal blocks for two spur connections to each device coupler
- Short-circuit protection to the fieldbus trunk with an additional voltage-limitation circuit
- Allows the connection of spurs and end devices in an Ex nA ic hazardous location

All modules are supplied with the ME 17,5 TBUS... DIN rail connector.
If you wish to maintain a distance of 50 mm between intrinsically safe and non-intrinsically safe modules, you will require an insulation plate and a 22.5 mm bus connector.

Ex n

Device coupler with TBUS for trunk line connection and termination

Ex:

Technical data

Supply		
Supply voltage range		10.5 V DC ... 32 V DC (input on trunk line side)
Typical current consumption		-
Max. current consumption		2 mA (with termination resistor)
Fieldbus interface		
Rated voltage		-
Termination resistor		100 Ω, external removable plug included
Surge protection		Active if voltage exceeds 39 V (typ.) or 41 V (max.)
General data		
Screw connection rigid / flexible / AWG		0.2 - 2.5 mm² / 0.2 - 2.5 mm² / 24 - 12
Dimensions	W / H / D	17.5 mm / 99.1 mm / 70.4 mm
Degree of protection		IP20
Ambient temperature (operation)		-40°C ... 85°C
Max. permissible relative humidity (operation)		< 95% (non-condensing)
Conformance/approvals		
Conformance		CE-compliant, additionally EN 61326
NE		NAMUR NE 21
ATEX		Sira 14ATEX4017X; II 3G; Ex nA IIC T4 Gc; Ex ic IIC T4, FISCO ic
IECEx		IECEx SIR 14.0010X; Ex nA IIC T4 Gc; Ex ic IIC T4 Gc, FISCO ic
CSA, USA/Canada		Class I, Div. 2, Groups A, B, C, D Ex nA IIC T4 Gc, Ex nL IIC T4, FNICO, Ex ic IIC T4 Gc, FISCO ic Class I, Zone 2 AEx nA IIC T4 Gc, AEx nL IIC T4, FNICO, AEx ic IIC T4 Gc, FISCO ic
FOUNDATION Fieldbus		FF-846
EMC note		Class A product, see page 527

Ordering data

Description	Type	Order No.	Pcs./Pkt.
Device coupler, for FOUNDATION Fieldbus and PROFIBUS PA			
	FB-ET/E	2316050	1
Isolator, for FOUNDATION Fieldbus			

Accessories

Partition plate	**FB-MODULAR-PP**	2316061	1
DIN rail connector	**ME 22,5 TBUS 1,5/ 5-ST-3,81 GN**	2707437	50

Device coupler with TBUS for 2 spurs

Ex:

Technical data
10.5 V DC ... 32 V DC (via FB-ET/E)
-
3.5 mA (no-load)
≤ 32 V (per spur)
-
-
0.2 - 2.5 mm² / 0.2 - 2.5 mm² / 24 - 12
17.5 mm / 89.7 mm / 70.4 mm
IP20
-40°C ... 85°C (depending on set rated current)
< 95% (non-condensing)
-
NAMUR NE 21
Sira 14ATEX4018X; II 3(3)G
Ex nA [ic] IIC T4 Gc;
Ex nA [ic] IIC T4 Gc, FISCO ic spurs
IECEx SIR 14.0011X;
Ex nA [ic] IIC T4 Gc;
Ex nA [ic] IIC T4 Gc, FISCO ic spurs
Class I, Div. 2, Groups A,B,C,D
Ex nL IIC T4 FNICO, Ex ic IIC T4 FISCO ic
Ex nA [nL] IIC T4, Ex nA [ic] IIC T4
Ex nA [nL] IIC T4 FNICO spurs, Ex nA [ic] IIC T4 FISCO ic spurs
Class I, Zone 2
AEx nL IIC T4 FNICO, AEx ic IIC T4 FISCO ic
AEx nA [nL] IIC T4, AEx nA [ic] IIC T4
AEx nA [nL] IIC T4 FNICO spurs, AEx nA [ic] IIC T4 FISCO ic spurs
FF-846
Class A product, see page 527

Ordering data

Type	Order No.	Pcs./Pkt.
FB-2SP/E	2316052	1

Accessories

FB-MODULAR-PP	2316061	1
ME 22,5 TBUS 1,5/ 5-ST-3,81 GN	2707437	50

Device coupler with TBUS for 1 electrically isolated spur connection

Ex:

Technical data
17 V DC ... 32 V DC (input on trunk line side)
10 mA
-
≥ 10 V (per spur)
-
-
0.2 - 2.5 mm² / 0.2 - 2.5 mm² / 24 - 12
17.5 mm / 89.7 mm / 70.4 mm
IP20
-40°C ... 60°C
< 95% (non-condensing)
CE-compliant, additionally EN 61326
NAMUR NE 21
II 3(3) G Ex nA [nL Gc] IIC T4 Gc, FNICO power supply (spur)
II 3(1) GD Ex nA [ia Ga Da] IIC T4 Gc, FISCO power supply (spur)
Ex nA [nL Gc] IIC T4 Gc, FNICO power supply (spur)
Ex nA [ia Ga Da] IIC T4 Gc, FISCO power supply (spur)
Ex nA [ia] IIC T4
-
Class A product, see page 527

Ordering data

Type	Order No.	Pcs./Pkt.
FB-ISO	2316064	1

Accessories

FB-MODULAR-PP	2316061	1
ME 22,5 TBUS 1,5/ 5-ST-3,81 GN	2707437	50

Isolator for Zone 2 installation using the intrinsically safe [ic] protection method

Technical data
9 V DC ... 30 V DC
-
-
≤ 32 V (per spur)
-
-
0.2 - 2.5 mm² / 0.2 - 2.5 mm² / 24 - 12
17.5 mm / 89.7 mm / 70.4 mm
IP20
-40°C ... 85°C
-
-
NAMUR NE 21
Sira 13ATEX4016;
II 3(3)G Ex nA [ic] IIC T4 Gc
IECEx SIR 13.0001X;
Ex nA [ic] IIC T4 Gc
Class I, Div. 2, Groups A, B, C, D; Ex nA[ic] IIC T4 Gc
Class I, Zone 2; AEx nA[ic] IIC T4 Gc
FF-846
Class A product, see page 527

Ordering data

Type	Order No.	Pcs./Pkt.
FB-2SP/24DC	2316352	1

Accessories

FB-MODULAR-PP	2316061	1
ME 22,5 TBUS 1,5/ 5-ST-3,81 GN	2707437	50

Device couplers for field devices

- Couple field devices and provide short-circuit current limiting
- Provide non-sparking and FISCO ic spur connections
- Single-sided connection configuration simplifies wiring in field housing
- Diagnostic LEDs indicate DC OK and errors at the spur connection
- Satisfies the requirements of EN 60079-0:2012, EN 60079-11:2012, EN 60079-15:2005 and EN 60079-15:2010.

For installation in Ex zone 1

For installation in Ex zone 2

	Technical data		Technical data	
	FB-8SP ISO	FB-12SP ISO	FB-6SP	FB-12SP
Supply				
Supply voltage range	16 V DC ... 32 V DC (input on trunk line side)		10.5 V DC ... 32 V DC (input on trunk line side)	
Typical current consumption	-		4.8 mA	6.5 mA
Max. current consumption	35 mA (trunk, no load) 350 mA (maximum trunk current)	50 mA (trunk, no load) 550 mA (maximum trunk current)	-	
Fieldbus interface				
Rated voltage	≤ 14 V (per spur)		≤ 32 V (per spur)	
Rated current	35 mA (per spur)		38 mA	
Termination resistor	Integrated termination, activated with bridge located in correct terminals		100 Ω, external removable plug included	
General data				
Screw connection rigid / flexible / AWG	0.2 - 2.5 mm² / 0.2 - 2.5 mm² / 24 - 12		0.2 - 2.5 mm² / 0.2 - 2.5 mm² / 24 - 12	
Dimensions W / H / D	279 mm / 142 mm / 66 mm		148.2 mm / 112.5 mm / 83.5 mm	254.1 mm / 112.5 mm / 83.5 mm
Degree of protection	IP20		IP20	
Ambient temperature (operation)	-40°C ... 80°C		-50°C ... 90°C	
Max. permissible relative humidity (operation)	< 95% (non-condensing)		< 95% (non-condensing)	
Conformance/approvals				
NE	NE21		NE21	
ATEX	DEMKO 16ATEX 1689X II 2(1) G Ex eb ib mb [ia Ga] IIC T4 Gb II (1D) [Ex ia Da] IIIC FISCO power supply (spur)		Sira 13ATEX4247X; Ex II 3(3)G Ex nA [ic] IIC T4 Gc, Entity/FISCO ic spurs Ex nA [nL] IIC T4 Gc; Ex II 3G Ex ic IIC T4 Gc, FISCO ic	
IECEx	IECEx UL 16.0114X Ex eb ib mb [ia Ga] IIC T4 Gb [Ex ia Da] IIIC FISCO power supply (spur)		IECEx SIR 13.0089X; Ex nA [ic] IIC T4 Gc, Entity/FISCO ic spurs; Ex nA [nL] IIC T4 Gc; Ex ic IIC T4 Gc, FISCO ic	
CSA, USA/Canada	-		Class I, Div. 2, Groups A, B, C, D; Ex nA [nL] IIC T4; Class I, Zone 2, AEx nA [nC] IIC T4	
FOUNDATION Fieldbus	FF-846		FF-846	
EMC note	Class A product, see page 527			

	Ordering data			Ordering data		
Description	**Type**	**Order No.**	Pcs./Pkt.	**Type**	**Order No.**	Pcs./Pkt.
Fieldbus barrier, for FOUNDATION Fieldbus and PROFIBUS PA						
- 8 spurs	**FB-8SP ISO**	2316311	1			
- 12 spurs	**FB-12SP ISO**	2316312	1			
Device coupler, for FOUNDATION Fieldbus and PROFIBUS PA						
- 6 spurs				**FB-6SP**	2316307	1
- 12 spurs				**FB-12SP**	2316310	1

Field diagnostic modules for FOUNDATION Fieldbus

- Reads physical layer diagnostics in the field
- Segment voltage, noise and signal can be monitored
- Easy control system integration with DD and EDDL
- Adjustable alarm condition thresholds allow for precision monitoring and trending
- Diagnostic data for up to 24 field devices
- Two module types for easy integration across all system platforms

With terminal block for FF power supply and/or block coupler applications

For modular device couplers mounted on TBUS

		Technical data	Technical data
		Ex:	Ex:
Supply			
Supply voltage range		9 V DC ... 32 V DC	9 V DC ... 32 V DC
Typical current consumption		27 mA	27 mA
Max. current consumption		29 mA	29 mA
Fieldbus interface			
Rated voltage		-	≤ 32 V
Rated current		-	29 mA
General data			
Screw connection rigid / flexible / AWG		0.2 - 2.5 mm² / 0.2 - 2.5 mm² / 24 - 12	-
Dimensions	W / H / D	17.7 mm / 93.9 mm / 70.4 mm	17.7 mm / 85 mm / 70.4 mm
Degree of protection		IP20	IP20
Ambient temperature (operation)		-40°C ... 85°C	-40°C ... 85°C
Max. permissible relative humidity (operation)		95% (non-condensing)	95% (non-condensing)
Conformance/approvals			
FOUNDATION Fieldbus		FF-830	FF-830
EMC note		Class A product, see page 527	Class A product, see page 527

	Ordering data			Ordering data		
Description	Type	Order No.	Pcs./Pkt.	Type	Order No.	Pcs./Pkt.
Field diagnostic module, for FOUNDATION Fieldbus						
	FB-DIAG/FF/LI	2316284	1	**FB-DIAG/FF/NC**	2316297	1

Power supply

Each DIN rail-mounted fieldbus power supply provides high-integrity power for one H1 segment. Built-in termination resistors enable digital communication and DC power to co-exist on a pair of wires.
– Galvanically isolated
– Integrated termination resistor

FB-PS... modular redundant power supply

– Modular base, one per segment, eliminates unused capacity
– Swappable bases for increased plant integrity
– Compact width optimizes critical enclosure space
– Redundant power modules, with common conditioning in the base, provides greatest system performance and reliability
– Auto Current Balance technology enhances product life by closely sharing power between modules
– High efficiency including MOSFET outputs

4-channel redundant power supplies

– No additional monitoring of remote signaling required, as it is already integrated in the redundant configuration
– Double the service life, thanks to even load distribution by means of ACB (auto current balancing) technology
– Local diagnostics via LEDs on the device as well as remote diagnostics via remote indication contact

Input data	
Nominal input voltage range	
Nominal current range	
Output data	
Output voltage range	
Output current	
Can be connected in parallel/series	
Max. power dissipation	
Signaling	
Signaling DC OK	
Signaling alarm	
Redundancy indication OK	
General data	
Dimensions	W / H / D
Degree of protection	
Ambient temperature (operation)	
Ambient temperature (storage/transport)	
Max. permissible relative humidity (operation)	
Conformance/approvals	
ATEX	
IECEx	
CSA, USA/Canada	
NE	
EN	
FOUNDATION Fieldbus	

Description
Power supply, modular redundant - Plug, 28 V DC, 500 mA - Base
Redundant fieldbus power supply base - Connection: D-SUB 25 base plug - Connection: Invensys® D-SUB 25 cable - Connection: two 20-pos. Yokogawa AKB336 cables

PCB connector, 5.0 mm pitch, color: black
PCB connector, 3.5 mm pitch, color: green
End cap

Ex n

Power supply plug

Ex n

Power supply base

Ex n

Redundant fieldbus power supply base

Technical data

18.5 V DC ... 30.5 V DC		
700 mA ... 1.1 A	-	-
28 V DC ... 30 V DC (on the trunk)	-	-
500 mA	-	-
Yes / No	- / -	- / -
4 W (typical)	-	-
Green LED	-	-
Yellow LED	-	-
Green LED	-	-
17.5 / 117.6 / 115 mm	36 / 202.5 / 61.5 mm	180 / 77 / 180 mm
IP20	-	IP20
-40°C ... 70°C	-40°C ... 70°C	-40°C ... 70°C
-40°C ... 85°C	-40°C ... 85°C	-40°C ... 85°C
95% (non-condensing)	95% (non-condensing)	95% (non-condensing)
Sira 11ATEX4216X; II 3 G Ex nA nC IIC T4 Gc	Sira 11ATEX4216X; II 3 G Ex nA nC IIC T4 Gc	Sira 11ATEX4216X; II 3 G Ex nA nC IIC T4 Gc
IECEx SIR 11.0097X; Ex nA nC IIC T4 Gc	IECEx SIR 11.0097X; Ex nA nC IIC T4 Gc	IECEx SIR 11.0097X; Ex nA nC IIC T4 Gc
Class I, Div. 2, Groups A, B, C, D; Ex nA nC IIC T4	Class I, Div. 2, Groups A, B, C, D; Ex nA nC IIC T4	Class I, Div. 2, Groups A, B, C, D; Ex nA nC IIC T4
Class I, Zone 2, AEx nA nC IIC T4	Class I, Zone 2, AEx nA nC IIC T4	Class I, Zone 2, AEx nA nC IIC T4
NAMUR NE 21	NAMUR NE 21	NAMUR NE 21
EN 61326	EN 61326	EN 61326
FF-831	FF-831	FF-831

Ordering data

Type	Order No.	Pcs./Pkt.
FB-PS-PLUG-24DC/28DC/0.5/EX	2316132	1

Type	Order No.	Pcs./Pkt.
FB-PS-BASE/EX	2316145	1

Type	Order No.	Pcs./Pkt.
FB-PS-MB-25DSUB/EX	2316146	1
FB-PS-MB-I/EX	2316149	1
FB-PS-MB-Y/EX	2316148	1

Accessories

ZEC 1,5/ 4-LPV-5,0 C2,4 BK	1793260	50
ZEC 1,0/ 6-LPV-3,5 C1	1915699	50
D-FB-PS	2316226	1

PROFIBUS DP/PA coupler

The PROFIBUS DP/PA coupler provides a powerful and reliable interface to connect PROFIBUS DP to the PROFIBUS PA process fieldbus network.

- Integrated PA termination resistor
- 500 mA PA current
- Expandable to 9 PA modules
- Transparent data transfer
- Integrated web server for configuration and diagnostics
- Integrated oscilloscope functionality

6 A power supply is recommended for applications where 2.5 A backplane current is exceeded.

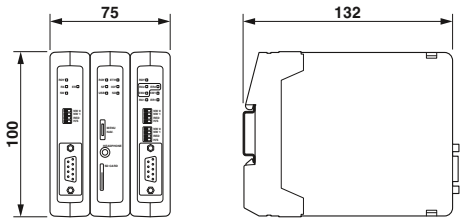

Technical data

Supply		
Supply voltage range		10.8 V DC ... 26.4 V DC
Ethernet interface		
Description		10/100 Mbps Ethernet
Connection method		RJ45
General data		
Screw connection rigid / flexible / AWG		0.2 - 2.5 mm² / 0.2 - 2.5 mm² / 24 - 12
Dimensions	W / H / D	75 mm / 100 mm / 132 mm
Degree of protection		IP20
Ambient temperature (operation)		-20°C ... 60°C
Conformance/approvals		
UL, USA/Canada		UL 508 Listed

Ordering data

Description	Type	Order No.	Pcs./Pkt.
Coupler, with oscilloscope function for PROFIBUS PA	**FB-HSB-DP/PA**	2316370	1
Coupler, with oscilloscope function for PROFIBUS PA and PROFIBUS DP	**FB-HSB-DP-SC/PA**	2316381	1
Head station, with a PROFIBUS DP repeater, provides network diagnostics and an oscilloscope function	**FB-HSB-DP-SC**	2316382	1

Accessories

Repeater, for PROFIBUS DP	**FB-DP-RPTR**	2316373	1
Repeater, for PROFIBUS DP, with oszilloscope	**FB-DP-RPTR/SC**	2316374	1
PROFIBUS PA interface module, with oscilloscope	**FB-PA/SC**	2316375	1
6 A power supply	**FB-HSP-PLUG/24DC/6A**	2316383	1
Head station, for monitoring up to four PROFIBUS networks	**FB-HSC**	2316371	1
Head station, for basic system functionality, no monitoring of PROFIBUS networks	**FB-HSA**	2316372	1

PROFIBUS PA I/O multiplexer

Analog and digital I/Os are integrated within a PROFIBUS PA system via a PA head station, Radioline I/O modules, and the four-channel NAMUR digital input module. Thanks to the preconfigured head station, five application variants are available:
– Valve controller
– 24-channel digital inputs with NAMUR sensors
– Combination of digital and analog I/Os
– Temperature inputs and/or analog inputs and outputs
– Temperature inputs and/or analog inputs

Each head station is addressed as a PROFIBUS PA device and is integrated by the host system with an EDD or GSD file. The four-channel and eight-channel I/O modules enable flexible configuration. They are extended as required, depending on the PROFIBUS PA telegram length.

Your web code: #1792

Notes:
For further information on Radioline I/O extension modules, see from page 380

Ex:

Technical data

Supply		
Supply voltage range		19.2 V DC ... 30.5 V DC
General data		
Dimensions	W / H / D	17.5 mm / 114.5 mm / 99 mm
Degree of protection		IP20
Ambient temperature (operation)		-40°C ... 70°C
EMC note		Class A product, see page 527

Ordering data

Description	Type	Order No.	Pcs./Pkt.
Head station for valve controller, for combination with a maximum of three RAD-NAM4-IFS digital NAMUR input modules and two RAD-DOR4-IFS digital relay output modules	FB-MUX/HS/DIO-NAM/PA	2316270	1
Head station, for combination with a maximum of six RAD-DI4-IFS digital input modules, six RAD-NAM4-IFS digital NAMUR input modules, three RAD-DI8-IFS digital input modules or any combination for a maximum of 24 input channels	FB-MUX/HS/DI24/PA	1005332	1
Head station, for combination with a maximum of three RAD-DAIO6-IFS analog/digital I/O modules	FB-MUX/HS/DAIO/PA	1005329	1
Head station, for combination with a maximum of three RAD-AI4-IFS analog input modules or RAD-PT100-4-IFS temperature input modules and two RAD-AO4-IFS analog output modules	FB-MUX/HS/AIOTEMP/PA	1005330	1
Head station, for combination with a maximum of five RAD-AI4-IFS analog input modules or RAD-PT100-4-IFS temperature input modules or any combination for a maximum of 20 input channels	FB-MUX/HS/AI/PA	1005331	1

Accessories

Digital input module for NAMUR proximity sensors, 4-channel	RAD-NAM4-IFS	2316275	1
Digital relay output module	RAD-DOR4-IFS	2901536	1
Analog/digital I/O module	RAD-DAIO6-IFS	2901533	1
Digital input module	RAD-DI4-IFS	2901535	1
Digital/pulse input module	RAD-DI8-IFS	2901539	1
Analog input module	RAD-AI4-IFS	2901537	1
Temperature input module	RAD-PT100-4-IFS	2904035	1
Analog output module	RAD-AO4-IFS	2901538	1

Modbus and HART gateways for PROFIBUS DP/PA and FOUNDATION Fieldbus

Use the Modbus and HART gateways to connect Modbus/RTU or HART devices to the FOUNDATION Fieldbus, PROFIBUS DP, and PROFIBUS PA process fieldbuses.

Features:

- Up to four Modbus/RTU or HART devices supported with just one gateway
- Space savings with just 6 mm required per channel

Modbus gateways

HART gateways

		Technical data		Technical data	
		GW PL FF/MODBUS	GW PL DP/MODBUS	GW PL FF/HART	GW PL DP/HART
Supply					
Supply voltage range		18 V DC ... 30 V DC		18.5 V DC ... 30 V DC	
Max. current consumption		34 mA	60 mA	70 mA	75 mA
Serial port					
Data rate		31.25 kbps	9.6 kbps (min.)	31.25 kbps	9.6 kbps (min.)
Number of connections		1	2	1	2
Connection method		COMBICON	D-SUB 9, COMBICON	COMBICON	D-SUB 9, COMBICON
Serial port					
Designation		Modbus/RTU		HART FSK	
Data rate		115.2 kbps (max.)		-	
Number of connections		2		3	
Connection method		COMBICON		COMBICON	
General data					
Dimensions	W / H / D	22.5 mm / 99 mm / 114.5 mm		22.5 mm / 99 mm / 114.5 mm	
Degree of protection		IP20		IP20	
Ambient temperature (operation)		-40°C ... 85°C		-40°C ... 85°C	
Conformance/approvals					
ATEX		PRESAFE 16ATEX7686X, II 3G, Ex nA IIC T4 Gc		PRESAFE 16ATEX7686X, II 3G, Ex nA IIC T4 Gc	
IECEx		IECEx PRE 16.0001X, Ex nA IIC T4 Gc		IECEx PRE 16.0001X, Ex nA IIC T4 Gc	
UL, USA/Canada		Class I, Div. 2, Groups A, B, C, D Class I, Zone 2, AEx nA IIC T4, Ex nA IIC T4 GcX		Class I, Div. 2, Groups A, B, C, D Class I, Zone 2, AEx nA IIC T4, Ex nA IIC T4 GcX	
EMC note		Class A product, see page 527		Class A product, see page 527	

	Ordering data			Ordering data		
Description	Type	Order No.	Pcs./Pkt.	Type	Order No.	Pcs./Pkt.
Protocol converter						
- Modbus/RTU to FOUNDATION Fieldbus	**GW PL FF/MODBUS**	2316363	1			
- Modbus/RTU to PROFIBUS PA	**GW PL PA/MODBUS**	2316364	1			
- Modbus/RTU to PROFIBUS DP	**GW PL DP/MODBUS**	2316365	1			
Protocol converter						
- HART to FOUNDATION Fieldbus				**GW PL FF/HART**	2316360	1
- HART to PROFIBUS PA				**GW PL PA/HART**	2316361	1
- HART to PROFIBUS DP				**GW PL DP/HART**	2316362	1
	Accessories			**Accessories**		
Adapter cable, 1 m long, with USB connection, for HART parameterization				**GW HART USB MODEM**	1003824	1

Ethernet HART multiplexer

Transmit critical HART process data over Ethernet networks with the multiplexer. In addition to the high Ethernet speed, benefit from the additional transmission of secondary process data.

The universal version also supports PROFINET in addition to Modbus/TCP and HART IP.

Features:

- Modular system enables scalable station configuration with up to five extension modules
- Connection of up to 40 HART devices per station
- In Modbus/TCP operation, the digital extension module enables additional digital I/Os to be acquired
- Monitoring and targeted response to active and passive process data with the aid of the digital inputs and outputs
- Parameterization via integrated web server
- Use of familiar software tools, thanks to HART IP protocol

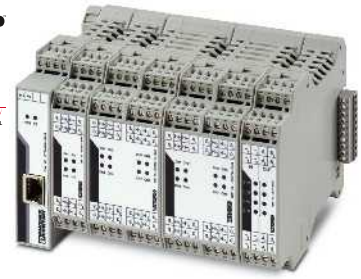

Ex:

Technical data

		GW PL ETH/UNI-BUS	GW PL ETH/BASIC-BUS
Supply			
Supply voltage range		19.2 V DC ... 30 V DC	
Nominal current consumption		46 mA (at 24 V DC)	45 mA (at 24 V DC)
Max. current consumption		63 mA (at 24 V DC)	62 mA (at 24 V DC)
Ethernet interface			
Interface		Ethernet 10/100Base T	
Connection method		RJ45 socket, auto negotiation and auto crossing	
Supported protocols		Modbus/TCP, HART IP, PROFINET	TCP/IP, HART IP, Modbus/TCP
General data			
Dimensions	W / H / D	22.5 mm / 99 mm / 114.5 mm	
Degree of protection		IP20	
Ambient temperature (operation)		-40°C ... 70°C	
Electromagnetic compatibility		Conformance with EMC Directive 2004/108/EC	
Conformance/approvals			
ATEX		II 3 G Ex nA IIC T4 Gc DEMKO 17 ATEX 1749X	-
IECEx		IECEx ULD 17.0020X Ex nA IIC T4 Gc	-
UL, USA/Canada		Class I, Div. 2, Groups A, B, C, D	
Noxious gas test		ISA-S71.04-1985 G3 Harsh Group A	

Ordering data

Description	Type	Order No.	Pcs./Pkt.
Ethernet head station, for modular gateway, supports five extension modules			
- with Modbus/TCP, HART IP, PROFINET	**GW PL ETH/UNI-BUS**	2702233	1
- with Modbus/TCP, HART IP	**GW PL ETH/BASIC-BUS**	2702321	1
Extension module			
- HART, passive, 4x AI or AO	**GW PL HART4-BUS**	2702234	1
- HART, passive, 8x AI or AO	**GW PL HART8-BUS**	2702235	1
- HART, active, 8x AI	**GW PL HART8+AI-BUS**	2702236	1
- Modbus/TCP, active, 4x DI and 4x DO	**GW PL DIO4-BUS**	2702237	1

Accessories

Adapter cable, 1 m long, with USB connection, for HART parameterization	**GW HART USB MODEM**	1003824	1

Prozessgrafik
Spitzdruck
Innendruck
Nachdruck
Staudruck
Zoom 1:5
PV1
PV2
PV3

HMIs and industrial PCs

HMIs and industrial PCs are the key to the efficient operation and monitoring of your systems and machines. You can work with a fully enclosed IP65 panel PC directly on site – or design detailed user interfaces as the interface to your system using a powerful HMI device.

HMIs

Human-machine interfaces, or HMIs for short, represent cost-effective automation based on efficient input and monitoring. Depending on your requirements, choose devices for WebVisit or Visu+ software, or for HTML5 applications.

Industrial PCs

Industrial PCs, or IPCs for short, combine the computing power of modern processors with the robustness and reliability of industrial components. Together with the right software, IPCs provide efficient and versatile solutions for control, operation, and monitoring.

IPCs for mobile applications

Mobile panel PCs are a state-of-the-art solution for intuitive teach-in.

HMIs and IPCs for harsh ambient conditions

Robust HMIs and industrial PCs are designed for permanent exposure to weather influences. Thanks to the IP67-protected front, sunlight readable display, and extended temperature range, you can use these devices in charging stations or sewage treatment plants, for example.

IPCs for the Ex area

Robust industrial PCs, developed for use in potentially explosive environments, are certified in accordance with IECEx and ATEX Zone 2/22.

HMIs for maritime applications

For demanding use on ships, Phoenix Contact offers robust operator and display panels.

Product overview	**466**
HMIs	
HMIs for HTML5 applications	**468**
HMIs for WebVisit software	**470**
HMIs for Visu+	**471**
Industrial PCs	
Box PCs	**474**
Rackmount PC	**477**
Panel PCs	**481**
Monitors with touch function	**485**
IPCs for mobile applications	
Tablet PCs	**486**
Mobile panels	**487**
HMIs and IPCs for harsh ambient conditions	**488**
IPCs for the Ex area	**491**
HMIs for maritime applications	**494**

HMIs for HTML5 applications

Web panels

Page 468

Configurable web panels

Page 469

HMIs for WebVisit software

Web panels

Page 470

HMIs for Visu+

Touch panels

Page 471

Touch panels

Page 472

Touch panels

Page 473

Box PCs

Box PCs

Page 474

Box PCs

Page 475

Box PCs

Page 476

Rackmount PCs

Rackmount PC – 4U

Page 477

Rackmount PC – 2U

Page 477

Remote monitoring

KVM extender

Page 478

Software PLC

Software PLCs with and without real-time extension

Page 479

Panel PCs

Valueline panel PCs
Page 481

Basicline panel PCs
Page 482

Panel PCs in IP65
Page 484

Monitors with touch function

Monitors with touch function
Page 485

IPCs for mobile applications

Tablet PCs
Page 486

Mobile panels
Page 487

HMIs and IPCs for harsh ambient conditions

Web panels and panel PCs
Page 488

Panel PCs
Page 490

IPCs for the Ex area

Configurable box PCs
Page 491

Configurable panel PCs
Page 492

HMIs for maritime applications

Touch panels
Page 494

Software

Software for SCADA and web-based visualizations
Page 31

VL Portico server ... – Remote control of networked IPCs
Page 38

Web panels

new

For basic HTML5 applications

The new BWP 2000 HMI device series with HTML5-compatible browser offers cost-effective web panels for basic applications. The touch panels with open web browser, which are an efficient entry-level version, extend the existing portfolio and perform operating and monitoring tasks with basic visualization requirements.

Your advantages:

- HTML5-compatible browser integrated in all devices
- Easy startup, just enter the IP and URL
- No security updates are required for Java or Flash plug-ins, thanks to HTML5
- Energy efficient, thanks to LED backlight
- Best price/performance ratio

Ex:

Technical data

Display data	
Display lighting type	LED
Brightness	350 cd/m²
Display backlight MTBF	25000 h
Color spectrum	16.7 million colors
Touch technology	analog resistive (polyester)
Computer data	
Operating system	Yocto/Linux
Processor	Arm® Cortex®-A9, 1 GHz
RAM	1 GB DDR2
Mass storage	Flash eMMC, 4 GB
Interfaces	1x USB Host 2.0
Network	1 x Ethernet (10/100 Mbps), RJ45
Power supply unit	24 V DC ±15%
General data	
Degree of protection	IP66 (on the front), IP20 (on the back)
Ambient temperature (operation)	0°C ... 50°C
Mounting type	Front installation
Vibration (operation)	DIN EN 60068-2-6
Shock	DIN EN 60068-2-27
EMC note	Class A product, see page 527

Ordering data

Description	Type	Order No.	Pcs./Pkt.
Web panel			
- Display: 10.92 cm (4.3"), 480 x 272 Pixel(s) (WQVGA)	**BWP 2043W**	1060549	1
- Display: 17.8 cm (7"), 800 x 480 Pixel(s) (WVGA)	**BWP 2070W**	1060632	1
- Display: 25.9 cm (10.2"), 1024 x 600 Pixel(s)	**BWP 2102W**	1060630	1

Configurable web panels

new

For demanding HTML5 applications

The new WP 4000 HMI device series with HTML5-compatible browser offers high-performance web panels for demanding applications. The WP 4000 devices perform operating and monitoring tasks with high visualization requirements, thereby extending the existing product portfolio to include a standard version.

Your advantages:

- Flexible, thanks to open web standard and free choice of web server and visualization software
- No security updates are required for Java or Flash plug-ins, thanks to HTML5
- Ideal for use with PLCnext Engineer or CODESYS
- Visualization of self-programmed JavaScript applications possible
- Secure communication, thanks to SSL-encrypted data transmission

Technical data

Display data	
Display (configuration option)	17.8 cm/7" TFT 25.7 cm / 10.1" TFT 30.7 cm/12.1" TFT
Screen resolution	800 x 480 Pixel(s) (WVGA) 7"-TFT resistive 1280 x 800 Pixel(s) (WXGA) 7"- / 10.1"-/ 12.1"-TFT PCAP
Display lighting type	LED
Brightness	350 cd/m², typical (adjustable)
Display backlight MTBF	40000 h
Color spectrum	16.7 million colors
Touch technology (configuration option)	Projective-capacitive (PCAP) analog resistive (polyester)
Computer data	
Operating system	Yocto/Linux
Processor	Arm® Cortex®-A53, 4x 1.2 GHz
RAM	1 GB LPDDR3
Mass storage	Flash eMMC, 8 GB
Interfaces	2x USB host 2.0
Network	1 x Ethernet (10/100 Mbps), RJ45
Power supply unit	24 V DC ±20%
General data	
Degree of protection	IP65 (front), IP20 (back)
Ambient temperature (operation)	0°C ... 50°C
Mounting type	Front installation
Vibration (operation)	DIN EN 60068-2-6
Shock	DIN EN 60068-2-27
EMC note	Class A product, see page 527

Ordering data

Description	Type	Order No.	Pcs./Pkt.
Web panel			
	WP 4000	**1065546**	1

Accessories

Mounting kit, including hardware for installation			
- panel installation	**HMI SCB MOUNTING KIT 6**	**2701385**	1
- panel installation	**HMI SCB MOUNTING KIT 8**	**2701387**	1

Web panels

Web panels for the WebVisit visualization software satisfy all requirements for basic operating and monitoring tasks.

Your advantages:

- Tailor-made for class 100 modular small-scale controllers
- Fast startup, thanks to Plug and Play
- Full graphic color display for clear representation
- Quick and user-friendly representation of your control variables using PC Worx Express and WebVisit software tools
- Multi-user operation, thanks to server/client structure
- Easy device replacement, as the project is saved on the PLC
- 4:3 or 16:9 display format

Display with resistive single-touch technology

Technical data

Display data	
Display lighting type	LED
Color spectrum	65536 colors
Touch technology	analog resistive (polyester)
Computer data	
Operating system	Windows® CE 5.0
Processor	Arm9™, 200 MHz
RAM	64 MB SDRAM
Mass storage	Flash, 32 MB
Interfaces	2x USB host 2.0
Network	1 x Ethernet (10/100 Mbps), RJ45
Power supply unit	24 V DC ±20%
General data	
Degree of protection	IP65 (front), IP20 (back)
Ambient temperature (operation)	0°C ... 50°C
Mounting type	Front installation
Vibration (operation)	DIN EN 60068-2-6
Shock	DIN EN 60068-2-27
EMC note	Class A product, see page 527

Ordering data

Description	Type	Order No.	Pcs./Pkt.
Web panel			
- Display: 8.9 cm (3.5"), 320 x 240 Pixel(s) (QVGA)	**WP 04T**	2913632	1
- Display: 14.5 cm (5.7"), 320 x 240 Pixel(s) (QVGA)	**WP 06T**	2913645	1
- Display: 26.4 cm (10.4"), 800 x 600 Pixel(s) (SVGA)	**WP 10T**	2700934	1
- Display: 38.1 cm (15"), 1024 x 768 Pixel(s) (XGA)	**WP 15T**	2700935	1
Widescreen web panel			
- Display: 17.8 cm (7"), 800 x 480 Pixel(s) (WVGA)	**WP 07T/WS**	2700307	1
- Display: 22.9 cm (9"), 800 x 480 Pixel(s) (WVGA)	**WP 09T/WS**	2700309	1

Accessories

Mounting kit, including hardware for installation			
- panel installation	**HMI SCB MOUNTING KIT 6**	2701385	1
- panel installation	**HMI SCB MOUNTING KIT 8**	2701387	1

Touch panels

Touch panels for visualization projects with basic requirements. Visualize your user interfaces using the free Visu+ Express engineering software, and benefit from flexible connection to a wide range of third-party systems.

Your advantages:
- VISU+ RT integrated as standard in all BTP 2000 devices
- Connection to various control systems, thanks to a large number of available drivers and OPC UA communication
- Developed for basic applications with attractive price/performance ratio
- 16:9 display format

Touch panel for basic applications

Ex:

Technical data

Display data	
Display lighting type	LED
Display backlight MTBF	20000 h
Color spectrum	262144 colors
Touch technology	analog resistive (polyester)
Computer data	
Operating system	Windows® CE 6.0
Processor	Arm9™ i.MX28, 454 MHz
RAM	128 MB DDR2 SDRAM
Mass storage	Flash, 512 MB
Interfaces	2x COM (RS-232/422/485)
Network	1 x Ethernet (10/100 Mbps), RJ45
Power supply unit	24 V DC ±15%
General data	
Degree of protection	IP66 (on the front), IP20 (on the back)
Ambient temperature (operation)	0°C ... 50°C
Mounting type	Front installation
Vibration (operation)	DIN EN 60068-2-6
Shock	DIN EN 60068-2-27
EMC note	Class A product, see page 527

Ordering data

Description	Type	Order No.	Pcs./Pkt.
Web panel			
- Display: 10.92 cm (4.3"), 480 x 272 Pixel(s) (WQVGA)	**BTP 2043W**	1050387	1
- Display: 17.8 cm (7"), 800 x 480 Pixel(s) (WVGA)	**BTP 2070W**	1046666	1
- Display: 26.4 cm (10.4"), 800 x 480 Pixel(s) (WVGA)	**BTP 2102W**	1046667	1

Touch panels

Powerful touch panels for visualizing demanding applications. Use the free Visu+ Express visualization software to design complex operating and monitoring interfaces and benefit from comprehensive features for all visualization requirements.

Thanks to the variety of drivers, benefit from flexible connection to a wide range of third-party systems.

Your advantages:

- Powerful and versatile, thanks to the new processor generation and integrated Visu+ visualization software
- Flexible connection, thanks to various drivers, even for third-party systems
- Robust and durable, thanks to the aluminum front
- Various display sizes and image formats
- Mobile system access possible via the Visu+ mobile app or HTML5 web client

Display with resistive single-touch technology

Ex:

Technical data

Display data	
Display lighting type	LED
Touch technology	analog resistive (polyester)
Computer data	
Operating system	Windows® Embedded Compact 7
Processor	Arm® Cortex®-A8, 800 MHz
RAM	512 MB RAM
Mass storage	Flash, 1 GB
Interfaces	2x USB host 2.0
Network	1 x Ethernet (10/100 Mbps), RJ45
Power supply unit	24 V DC ±20%
General data	
Degree of protection	IP65 (front), IP20 (back)
Ambient temperature (operation)	0°C ... 50°C
Mounting type	Front installation
Vibration (operation)	DIN EN 60068-2-6
Shock	DIN EN 60068-2-27

Ordering data

Description	Type	Order No.	Pcs./Pkt.
Touch panel with graphics-capable TFT display, 1 x Ethernet, 2 x USB, integrated AX OPC server and integrated runtime of the Visu+ visualization software			
- Display: 10.92 cm (4.3"), 480 x 272 Pixel(s) (WQVGA)	**TP 3043W**	2402629	1
- Display: 14.5 cm (5.7"), 320 x 240 Pixel(s) (QVGA)	**TP 3057Q**	2400452	1
- Display: 14.5 cm (5.7"), 640 x 480 Pixel(s) (VGA)	**TP 3057V**	2400453	1
- Display: 17.8 cm (7"), 800 x 480 Pixel(s) (WVGA)	**TP 3070W**	2400454	1
- Display: 22.9 cm (9"), 800 x 480 Pixel(s) (WVGA)	**TP 3090W**	2402630	1
- Display: 26.4 cm (10.4"), 800 x 600 Pixel(s) (SVGA)	**TP 3105S**	2400455	1
- Display: 30.7 cm (12.1"), 1280 x 800 Pixel(s) (WXGA)	**TP 3120W**	2400457	1
- Display: 30.7 cm (12.1"), 800 x 600 Pixel(s) (SVGA)	**TP 3121S**	2400456	1
- Display: 38.1 cm (15"), 1024 x 768 Pixel(s) (XGA)	**TP 3150S**	2400458	1
- Display: 39.12 cm (15.4"), 1280 x 800 Pixel(s) (WXGA)	**TP 3154W**	2402631	1

Accessories

Mounting kit, including hardware for installation			
- panel installation	**HMI SCB MOUNTING KIT 6**	2701385	1
- panel installation	**HMI SCB MOUNTING KIT 8**	2701387	1

Touch panels

Using the HMIs for the Visu+ visualization software, you can optimally reproduce your systems and processes. The devices have a new design and projected-capacitive (PCAP) touch displays with multi-touch function. The robust interface and various display sizes give you even more flexibility when it comes to system planning.

Your advantages:

- Robust and sturdy, thanks to glass front suitable for industrial use
- Integrated Visu+ visualization software
- Flexible connection, thanks to various drivers, even for third-party systems
- Fast response and display refresh, thanks to powerful processor
- Mobile system access possible via the Visu+ mobile app or HTML5 web client

Display with multi-touch function

Ex:

Technical data

Display data	
Display lighting type	LED
Touch technology	Projective-capacitive (PCAP)
Computer data	
Operating system	Windows® Embedded Compact 7
Processor	Arm® Cortex®-A8, 1000 MHz
RAM	512 MB LPDDR RAM
Mass storage	NAND-Flash, 1 GB
Interfaces	2x USB host 2.0
Network	1 x Ethernet (10/100 Mbps), RJ45
Power supply unit	24 V DC ±20%
General data	
Degree of protection	IP65 (front), IP20 (back)
Ambient temperature (operation)	0°C ... 50°C
Mounting type	Front installation
Vibration (operation)	DIN EN 60068-2-6
Shock	DIN EN 60068-2-27

Ordering data

Description	Type	Order No.	Pcs./Pkt.
Touch panel with graphics-capable TFT display, 1 x Ethernet, 2 x USB, and integrated runtime of the Visu+ visualization software			
- Display: 17.8 cm (7"), 800 x 480 Pixel(s) (WVGA)	**TP 3070W/P**	2403459	1
- Display: 22.9 cm (9"), 800 x 480 Pixel(s) (WVGA)	**TP 3090W/P**	2403460	1
- Display: 30.7 cm (12.1"), 1280 x 800 Pixel(s) (WXGA)	**TP 3120W/P**	2403461	1
- Display: 39.6 cm (15.6"), 1366 x 768 Pixel(s) (WXGA)	**TP 3156W/P**	2403462	1
- Display: 47.0 cm (18.5"), 1366 x 768 Pixel(s) (WXGA)	**TP 3185W/P**	2403862	1

Accessories

Mounting kit, including hardware for installation			
- panel installation	**HMI SCB MOUNTING KIT 6**	2701385	1
- panel installation	**HMI SCB MOUNTING KIT 8**	2701387	1

Box PCs

Box PCs are compact, easy to maintain, and powerful. They are particularly impressive when it comes to demanding applications. These include measuring, controlling, and testing process and machine data or distributed visualizations in conjunction with remote monitors. Various mounting options and scalable performance make box PCs the ideal platform for machine building and systems manufacturing.

Your advantages:

- High system availability, thanks to a fanless design which is suitable for industrial applications and the absence of moving parts
- Versatile use, thanks to various mounting options, e.g., on the DIN rail
- Energy-efficient Intel® Atom™ to Core™ i7 processors
- Large-scale compatibility, thanks to open IT standards, numerous interfaces and operating systems
- Particularly easy to maintain, thanks to easily accessible components in the IPC housing

Additional features:

- Configurable based on customer requirements
- System protection through the use of embedded operating systems

Notes:

You can find additional information about industrial PCs and the corresponding accessories in the product area of our website at phoenixcontact.net/products.

Configurable box PC

Ex:

Technical data

Computer data	
Operating system (configuration option)	without operating system Windows® 7 Professional SP1 (64-Bit), German Windows® 7 Professional SP1 (64-bit), English Windows® 7 Ultimate SP1 (64 bit), Multi-language Windows® 7 Ultimate SP1 (32-bit), Multi-language Windows® 7 Professional SP1 (32-bit), English Windows® 7 Professional SP1 (32-bit), German Windows® Embedded Standard 7 SP1 (32-bit), Multi-language Windows® Embedded Standard 7 SP1 (64-bit), Multi-language Windows® 10 IoT Enterprise LTSB 2015 (32-bit), Multi-language Windows® 10 IoT Enterprise LTSB 2015 (64-bit), Multi-language
RAM (configuration option)	4 GB DDR3 SODIMM 8 GB DDR3 SODIMM 16 GB DDR3 SODIMM
Mass storage (configuration option)	without mass storage SSD (SLC), 4 GB SSD (SLC), 8 GB SSD (SLC), 16 GB SSD (SLC), 32 GB 2.5" HDD SATA, 320 GB 2.5" SSD (MLC), 240 GB 2.5" SSD (MLC), 480 GB
Raid system	0, 1
Interfaces	1x COM (RS-232/422/485) 2x USB 2.0 2x USB 3.0
Optional interfaces (configuration option)	Without optional interface 2x COM (RS-232), 1x COM (RS-232/422/485) 2x Ethernet, 1x audio out (3.5 mm), 1x audio in (3.5 mm)
Slots	PCI/PCIe optional
Monitor output	2x DisplayPort
Network	2x Ethernet (10/100/1000 Mbps), RJ45
Power supply unit	24 V DC ±20%
General data	
Degree of protection	IP30
Ambient temperature (operation)	0°C ... 45°C (with HDD) -20°C ... 60°C (with SSD)
Permissible humidity (operation)	5% ... 95% (non-condensing)
Mounting type (configuration option)	Bookshelf mounting Wall mounting
Vibration (operation)	DIN EN 60068-2-6
Shock	15g, 11 ms in accordance with IEC 60068-2-27
EMC note	Class A product, see page 527

Ordering data

Description	Type	Order No.	Pcs./Pkt.
Industrial PC			
- with Intel® Atom™ E3845 technology	**VL2 BPC 1000**	2403046	1
- with Intel® Celeron® N2930 technology	**VL2 BPC 2000**	2400332	1
- with Intel® Core™ i3-4010U technology	**VL2 BPC 3000**	2400492	1
- with Intel® Core™ i5-4300U technology	**VL2 BPC 7000**	2400333	1
- with Intel® Core™ i7-6822EQ technology	**VL2 BPC 9000**	2400499	1

Box PCs

The new generation of compact box PCs is optimized for automation applications in the lower price segment.

The IPCs are suitable for assembly stations, warehousing and logistics, for production data and energy data collection, and for production networking.

Your advantages:

- High system availability, thanks to a fanless design which is suitable for industrial applications and the absence of moving parts
- Long-term availability, thanks to the latest 7th generation Intel processors
- Space saving, thanks to new M.2 storage technology
- Wireless connection, thanks to optional WLAN module (WLAN-capable)

Notes:

You can find additional information about industrial PCs and the corresponding accessories in the product area of our website at phoenixcontact.net/products.

new

Configurable box PC

Technical data

Computer data	
Operating system (configuration option)	Windows® 10 IoT Enterprise LTSB 2016 (64-bit), Multi-language
RAM (configuration option)	4 GB DDR3 SODIMM
Mass storage (configuration option)	M.2 SSD, 128 GB
Interfaces	1x COM (RS-232/422/485) 2x COM (RS-232) 2x USB 2.0 2x USB 3.0
Monitor output	2x DisplayPort
Network	2x Ethernet (10/100/1000 Mbps), RJ45
Power supply unit	24 V DC ±20%
General data	
Degree of protection	IP20
Ambient temperature (operation)	0°C ... 50°C
Permissible humidity (operation)	5% ... 95% (non-condensing)
Mounting type (configuration option)	Wall mounting DIN rail mounting
Vibration (operation)	DIN EN 60068-2-6
Shock	15g, 11 ms in accordance with IEC 60068-2-27
EMC note	Class A product, see page 527

Ordering data

Description	Type	Order No.	Pcs./Pkt.
Industrial PC			
- with Intel® Celeron® N3350 technology (dual-core)	**BL2 BPC 1000**	2404777	1
- with Intel® Pentium® N4200 technology (quad-core)	**BL2 BPC 2000**	2404844	1
- with Intel® Core™ i5-7442EQ technology (quad-core)	**BL2 BPC 7000**	1016240	1

Box PCs

Box PCs are compact, easy to maintain, and powerful. They are particularly impressive when it comes to demanding applications. These include measuring, controlling, and testing process and machine data or distributed visualizations in conjunction with remote monitors. Various mounting options and scalable performance make box PCs the ideal platform for machine building and systems manufacturing.

Your advantages:

- High system availability, thanks to a fanless design which is suitable for industrial applications and the absence of moving parts
- Powerful Intel® Celeron® or Core™-i3 processors
- Large-scale compatibility, thanks to open IT standards, numerous interfaces and operating systems
- Can be extended via two PCI slots
- Particularly easy to maintain, thanks to easily accessible components in the IPC housing
- Configurable based on customer requirements

Notes:

You can find additional information about industrial PCs and the corresponding accessories in the product area of our website at phoenixcontact.net/products.

Configurable box PC

Ex:

Technical data

Computer data		
Operating system (configuration option)		without operating system Windows® 7 Ultimate SP1 (32-bit), Multi-language Windows® 7 Ultimate SP1 (64 bit), Multi-language Windows® 7 Professional SP1 (32-bit), German Windows® 7 Professional SP1 (64-bit), German Windows® 7 Professional SP1 (32-bit), English Windows® 7 Professional SP1 (64-bit), English Windows® 7 Professional SP1 (32-bit), Chinese Windows® 7 Professional SP1 (64-Bit), Chinese Windows® Embedded Standard 7 SP1 (32-bit), Multi-language Windows® Embedded Standard 7 E SP1 (32-bit) Windows® 10 IoT Enterprise LTSB 2015 (32-bit), Multi-language Windows® 10 IoT Enterprise LTSB 2015 (64-bit), Multi-language Windows® 10 IoT Enterprise LTSB 2016 (32-bit), Multi-language Windows® 10 IoT Enterprise LTSB 2016 (64-bit), Multi-language
RAM (configuration option)		4 GB DDR3 SODIMM 8 GB DDR3 SODIMM 16 GB DDR3 SODIMM
Mass storage (configuration option)		without mass storage CompactFlash®, 1 GB CompactFlash®, 2 GB CompactFlash®, 4 GB CompactFlash®, 8 GB CompactFlash®, 16 GB CompactFlash®, 32 GB SSD (SLC), 16 GB SSD (SLC), 32 GB 2.5" HDD SATA, 320 GB 2.5" HDD SATA, 500 GB 2.5" SSD (MLC), 150 GB 2.5" SSD (MLC), 240 GB 2.5" SSD (MLC), 480 GB
Interfaces		1x COM (RS-232/422/485) 3x USB 2.0 1x USB 3.0
Slots		without slots 2x PCI
Monitor output		1x DisplayPort 1x DVI-D
Network		2x Ethernet (10/100/1000 Mbps), RJ45
Power supply unit		24 V DC ±20%
General data		
Dimensions	W / H / D	265 mm / 207 mm / 87 mm
Degree of protection		IP20
Ambient temperature (operation)		-20°C ... 50°C (configuration options can affect the operating temperature. See user manual for details)
Permissible humidity (operation)		5% ... 95% (non-condensing)
Mounting type (configuration option)		Bookshelf mounting Wall mounting
Vibration (operation)		IEC 60068-2-27
Shock		15g, 11 ms impulse in accordance with IEC 60068-2-27
EMC note		Class A product, see page 527

Ordering data

Description	Type	Order No.	Pcs./Pkt.
Industrial PC			
- with Intel® Celeron® N2930 technology	**VL BPC 2000**	2402759	1
- with Intel® Core™ i3-4010U technology	**VL BPC 3000**	2400183	1

Rackmount PCs

The powerful rackmount PCs in standardized 19" format provide the right solution for demanding applications in your industry.

Your advantages:
- Tailored to the 19" rack format with 2 RU or 4 RU (Rack Units)
- Can be extended via PCI/PCIe slots
- High system availability and data security, thanks to RAID support (0/1/5)
- Easy maintenance, thanks to 2 or 3 hot-swappable drives
- Increased security, thanks to lockable front flap
- Easy access to air filters

Rackmount PC with 2 RU

Rackmount PC with 4 RU

	Technical data	Technical data
Computer data		
Processor (configuration option)	Intel® Core™ i7-4770S 3.90 GHz Intel® Core™ i3-4330TE 2.40 GHz	Intel® Core™ i7-4770S 3.90 GHz Intel® Core™ i3-4330TE 2.40 GHz
RAM (configuration option)	16 GB DDR3 SODIMM 8 GB DDR3-1066 SODIMM	16 GB DDR3 SODIMM 8 GB DDR3-1066 SODIMM
Mass storage (configuration option)	without mass storage 1 TB HDD 3.5" SATA 2 TB HDD 3.5" SATA 4 TB HDD 3.5" SATA	without mass storage 1 TB HDD 3.5" SATA 2 TB HDD 3.5" SATA 4 TB HDD 3.5" SATA
Raid system	0, 1	0, 1, 5
Interfaces	1x COM (RS-232/422/485) 2x COM (RS-232) 4x USB 2.0 2x USB 3.0	1x COM (RS-232/422/485) 2x COM (RS-232) 6x USB 2.0 2x USB 3.0
Slots	optional	optional
Extended functions	3x PCI 1x PCIe x4 1x PCIe x16	8x PCI 3x PCI Express x1 1x PCI Express x16
Monitor output	1x DVI-D	1x DVI-D
Network	2x Ethernet (10/100/1000 Mbps), RJ45	2x Ethernet (10/100/1000 Mbps), RJ45
Power supply unit	110/220 V AC	110/220 V AC
General data		
Degree of protection	IP20	IP20
Ambient temperature (operation)	0°C ... 55°C (configuration options can affect the operating temperature. See user manual for details)	0°C ... 55°C (configuration options can affect the operating temperature. See user manual for details)
Permissible humidity (operation)	5% ... 95% (non-condensing)	5% ... 95% (non-condensing)
Mounting type	Installation in the control cabinet (19")	Installation in the control cabinet (19")
Vibration (operation)	DIN EN 60068-2-6	DIN EN 60068-2-6
Shock	15g in all directions in acc. with IEC 60068-2-27	15g in all directions in acc. with IEC 60068-2-27

	Ordering data			Ordering data		
Description	Type	Order No.	Pcs./Pkt.	Type	Order No.	Pcs./Pkt.
Rackmount PC						
- 19-inch, 2U	**BL RACKMOUNT 2U**	2400063	1			
- 19-inch, 4U				**BL RACKMOUNT 4U**	2400064	1
	Accessories			**Accessories**		
Mass storage						
- 1 TB HDD 3.5"	**IPC 3.5 1TB HDD**	2403835	1	**IPC 3.5 1TB HDD**	2403835	1
- 2 TB HDD 3.5"	**IPC 3.5 2TB HDD**	2403836	1	**IPC 3.5 2TB HDD**	2403836	1
- 4 TB HDD 3.5"	**IPC 3.5 4TB HDD**	2403837	1	**IPC 3.5 4TB HDD**	2403837	1
Redundant power supply for the BL RACKMOUNT 2U	**BL RM 2U REDUNDANT 350W PS**	2404379	4	**BL RM 2U REDUNDANT 350W PS**	2404379	4

KVM extender

The **VL KVM EXTENDER** enables data transmission between an industrial PC and an operator panel over a distance of up to 90 m. With just one standard Ethernet cable, you can transmit video, audio, and USB signals between a remote operator panel and a control cabinet PC without losses.

Your advantages:
- Flexible, thanks to remote operating solutions up to 90 m
- Cost-effective, thanks to elimination of cable and mounting costs
- Increased system availability, thanks to the use of purely passive displays
- Industry-capable, thanks to an extended temperature range of -20°C to +50°C
- Fast startup, thanks to a solution consisting purely of hardware

Technical data

Computer data		
Interfaces		1x USB 2.0, type B (VL KVM EXTENDER (TX)) 3x USB 2.0, type A (VL KVM EXTENDER (RX)) 1x micro-B USB 1x RJ45
Monitor output		1x DisplayPort 1x DVI-D
Power supply unit		24 V DC ±20%
General data		
Dimensions	W / H / D	150 mm / 80 mm / 43 mm
Degree of protection		IP20
Ambient temperature (operation)		-20°C ... 50°C
Permissible humidity (operation)		5% ... 95% (relative humidity, non-condensing)
Mounting type		DIN rail mounting
Shock		15g, 11 ms in accordance with IEC 60068-2-27
EMC note		Class A product, see page 527

Ordering data

Description	Type	Order No.	Pcs./Pkt.
KVM extender			
	VL KVM EXTENDER	**2404770**	1

Software PLC for installation on IPCs

Industrial PCs for visualizing and operating processes are often only utilized to a limited extent. Make use of these available resources and also transform your industrial PC into a full-fledged PLC.

Depending on the performance requirements, choose between **PC Worx SRT** with statistically guaranteed response times for small to medium tasks and **PC Worx RT Basic** for complex automation with real-time requirements.

Your advantages:

- Stable and reliable, thanks to operating system expansion with PC Worx RT Basic
- Easy and inexpensive visualization, thanks to integrated web server
- Maximum Ethernet openness, as all common protocols are supported

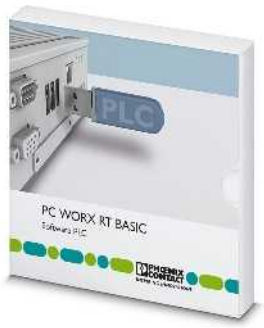

Software PLC with real-time extension

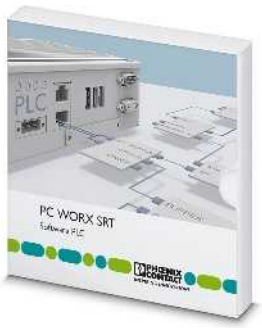

Software PLC without real-time extension

	Technical data	Technical data
Hardware requirements		
Processor	min. Intel® Core™2 Duo	min. Intel® Atom™
Main memory (RAM)	min. 2 GByte	min. 512 Mbyte
Hard disk memory	min. 1 GByte	min. 1 GByte
Interfaces	Ethernet port, USB port	Ethernet Port
Operating equipment	Keyboard, mouse recommended	Keyboard, mouse recommended
Monitor resolution	XGA (1024 x 768)	XGA (1024 x 768)
Software requirements		
Operating system	Windows® 7 (32-Bit/64-Bit) Windows® 8.1 (32-Bit/64-Bit) Windows® Embedded Standard 7 Windows® Embedded 2009 Windows® 10 (32-Bit/64-Bit)	Windows® 7 (32-Bit/64-Bit) Windows® 8.1 (32-Bit/64-Bit) Windows® Embedded Standard 7 Windows® Embedded 2009 Windows® 10 (32-Bit/64-Bit)
Supported browsers	Internet Explorer Version 8 or later	Internet Explorer Version 8 or later
Basic functions		
	Complete PLC PROFINET controller and device functionality only in conjunction with a Valueline PC INTERBUS functionality only in conjunction with an INTERBUS master controller board Integration of Modbus/TCP in the firmware	Complete PLC Non-real-time-capable software PLC for installation on a standard PC with integrated Modbus/TCP, plus PROFINET controller and device functionality
IEC 61131 runtime system		
Programmable under	PC Worx in IEC 61131	PC Worx in IEC 61131
Processing speed	0.001 ms (1 K mixed instructions, Intel® Core™2 Duo 1.5 GHz) 0.7 µs (1 K bit instructions, Intel® Core™2 Duo 1.5 GHz)	5.5 µs (1 K mixed instructions, Intel® Atom™ Z510PT) 4 µs (1 K bit instructions, Intel® Atom™ Z510PT)
Program memory	8 Mbyte	1 Mbyte
Mass storage	16 Mbyte	1 Mbyte
Retentive mass storage	240 kByte	48 kByte
Number of data blocks	depends on mass storage	depends on mass storage
Number of timers, counters	depends on mass storage	depends on mass storage
Number of control tasks	16	8

	Ordering data			Ordering data		
Description	Type	Order No.	Pcs./Pkt.	Type	Order No.	Pcs./Pkt.
Software PLC	**PC WORX RT BASIC**	2700291	1	**PC WORX SRT**	2701680	1
	Accessories			**Accessories**		
PC controller board	**IBS PCI SC/I-T**	2725260	1			
AX OPC SERVER, communication interface for OPC-compatible visualization with PC Worx-based controllers	**AX OPC SERVER**	2985945	1	**AX OPC SERVER**	2985945	1
Industrial PC	**See page 474 onwards**			**See page 474 onwards**		

Valueline panel PCs

The new generation of Valueline panel PCs combines the latest technology and robust industrial design to create a powerful operation and monitoring device. With various display sizes and numerous configuration options, the new Valueline panel PC is the tailor-made IPC solution.

Your advantages:

- Multitouch capability with projected capacitive touch-screen technology
- Extremely robust, thanks to the industrial, fanless design
- Maintenance friendly with access to all important components

Notes:

You can find additional information about industrial PCs and the corresponding accessories in the product area of our website at phoenixcontact.net/products.

Configurable panel PC with Intel® Atom™E3845 technology

Ex:

Technical data

Display data	
Display lighting type	LED
Computer data	
Operating system (configuration option)	without operating system Windows® 7 Professional SP1 (64-Bit), German Windows® 7 Professional SP1 (64-bit), English Windows® 7 Ultimate SP1 (64 bit), Multi-language Windows® 7 Ultimate SP1 (32-bit), Multi-language Windows® 7 Professional SP1 (32-bit), English Windows® 7 Professional SP1 (32-bit), German Windows® Embedded Standard 7 SP1 (32-bit), Multi-language Windows® Embedded Standard 7 SP1 (64-bit), Multi-language Windows® 10 IoT Enterprise LTSB 2015 (32-bit), Multi-language Windows® 10 IoT Enterprise LTSB 2015 (64-bit), Multi-language
Processor	Intel® Atom™ E3845 1.91 GHz
RAM	4 GB DDR3
Interfaces	1x COM (RS-232/422/485) 2x USB 2.0 1x USB 3.0
Optional interfaces (configuration option)	Without optional interface 1x COM (RS-232), 1x COM (RS-485), 2x CAN 1x COM (RS-232), 1x COM (RS-485)
Slots	1x SD
Monitor output	1x DisplayPort
Network	2x Ethernet (10/100/1000 Mbps), RJ45
Power supply unit	24 V DC ±20%
General data	
Degree of protection	IP66 (front), IP30 (back)
Ambient temperature (operation)	0°C ... 50°C
Permissible humidity (operation)	20% ... 85% (non-condensing)
Mounting type	Front installation
Vibration (operation)	1g, in accordance with EN 60068-2-6
Shock	DIN EN 60068-2-27
EMC note	Class A product, see page 527

Ordering data

Description	Type	Order No.	Pcs./Pkt.
Industrial panel PC (PPC) with projected-capacitive touch screen (4-touch control). Configurable options for mass storage.			
- Display: 17.8 cm (7"), 800 x 480 Pixel(s) (WVGA)	**VL2 PPC7 1000**	2403708	1
- Display: 22.9 cm (9"), 800 x 480 Pixel(s) (WVGA)	**VL2 PPC9 1000**	2403709	1
- Display: 30.7 cm (12.1"), 1280 x 800 Pixel(s) (WXGA)	**VL2 PPC12 1000**	2403710	1
Industrial panel PC (PPC) with projected capacitive touch screen (ten-point touch). Configurable options for display size, screen resolution, and mass storage.	**VL2 PPC 1000**	2403047	1

Valueline panel PCs

The new generation of Valueline panel PCs combines state-of-the-art technology and robust industrial design into one high-performance operation and monitoring device. Various display sizes and numerous configuration options make the Valueline panel PC the tailor-made IPC solution.

Your advantages:

- Multitouch capability with projected capacitive touch-screen technology
- Extremely robust, thanks to the industrial, fanless design
- Maintenance friendly with access to all important components
- Can be extended via PCI/PCIe slot
- High data security, thanks to 2 forms of mass storage and RAID support

Notes:

You can find additional information about industrial PCs and the corresponding accessories in the product area of our website at phoenixcontact.net/products.

Configurable panel PC

Ex:

Technical data

Display data	
Display (configuration option)	39.6 cm/15.6" TFT 47.0 cm / 18.5" TFT 54.6 cm/21.5" TFT
Screen resolution	1366 x 768 Pixel(s) (WXGA) 15.6" TFT; 18.5" TFT 1920 x 1080 Pixel(s) (Full HD)
Display lighting type	LED
Brightness	300 cd/m², typical (adjustable)
Display backlight MTBF	> 50000 h (dependent on configuration)
Color spectrum	16.7 million colors
Touch technology	projective-capacitive, ten-touch control
Computer data	
Operating system (configuration option)	without operating system Windows® 7 Professional SP1 (64-Bit), German Windows® 7 Professional SP1 (64-bit), English Windows® 7 Ultimate SP1 (64 bit), Multi-language Windows® 7 Ultimate SP1 (32-bit), Multi-language Windows® 7 Professional SP1 (32-bit), English Windows® 7 Professional SP1 (32-bit), German Windows® Embedded Standard 7 SP1 (32-bit), Multi-language Windows® Embedded Standard 7 SP1 (64-bit), Multi-language Windows® 10 IoT Enterprise LTSB 2015 (32-bit), Multi-language Windows® 10 IoT Enterprise LTSB 2015 (64-bit), Multi-language
RAM (configuration option)	4 GB DDR3 SODIMM 8 GB DDR3 SODIMM
Mass storage (configuration option)	without mass storage SSD (SLC), 4 GB SSD (SLC), 8 GB SSD (SLC), 16 GB SSD (SLC), 32 GB 2.5" HDD SATA, 320 GB 2.5" SSD (MLC), 240 GB 2.5" SSD (MLC), 480 GB
Raid system	without RAID system
Interfaces	1x COM (RS-232/422/485) 4x USB 2.0
Optional interfaces (configuration option)	without optional interface 2x COM (RS-232), 1x COM (RS-232/422/485) 2x Ethernet, 1x audio out (3.5 mm), 1x audio in (3.5 mm)
Slots	PCI/PCIe optional
Monitor output	1x DisplayPort
Network	2x Ethernet (10/100/1000 Mbps), RJ45
Power supply unit	24 V DC ±20%
General data	
Degree of protection	IP66 (front), IP30 (back)
Ambient temperature (operation)	0°C ... 45°C (with HDD) -20°C ... 60°C (with SSD)
Permissible humidity (operation)	5% ... 95% (non-condensing)
Mounting type	Front installation
Vibration (operation)	DIN EN 60068-2-6
Shock	15g, 11 ms in accordance with IEC 60068-2-27
EMC note	Class A product, see page 527

Ordering data

Description	Type	Order No.	Pcs./Pkt.
Industrial panel PC (PPC) with projected-capacitive touch screen. Configurable options for display size, RAM, and mass storage.			
- with Intel® Celeron® N2930 technology	**VL2 PPC 2000**	2400334	1
- with Intel® Core™ i3-4010U technology	**VL2 PPC 3000**	2400498	1
- with Intel® Core™ i5-4300U technology	**VL2 PPC 7000**	2400346	1
- with Intel® Core™ i7-6822EQ technology	**VL2 PPC 9000**	2400500	1

Basicline panel PCs

The new generation of robust panel PCs is optimized for automation applications in the lower price segment.

The IPCs are suitable for assembly stations, warehousing and logistics, for production data and energy data collection, and for production networking.

Your advantages:

- High system availability, thanks to a fanless design which is suitable for industrial applications and the absence of moving parts
- Easy integration into existing systems, thanks to proven design with unchanged dimensions
- Long-term availability, thanks to the latest 7th generation Intel processors
- Space saving, thanks to new M.2 storage technology
- Wireless connection, thanks to optional WLAN module (WLAN-capable)

Notes:

You can find additional information about industrial PCs and the corresponding accessories in the product area of our website at phoenixcontact.net/products.

new

Configurable panel PC

Technical data

Display data	
Display (configuration option)	30.7 cm/12.1" TFT 38.1 cm/15" TFT 43.0 cm/17" TFT
Screen resolution	1280 x 1024 Pixel(s) (SXGA) 17"-TFT 1024 x 768 Pixel(s) (XGA) 12.1"- / 15"-TFT
Display lighting type	LED
Brightness	Dependent on configuration
Display backlight MTBF	50000 h
Color spectrum	Dependent on configuration
Touch technology	Analog resistive (polyester)
Computer data	
Operating system (configuration option)	without operating system Windows® 10 IoT Enterprise LTSB 2016 (64-bit), Multi-language
Processor (configuration option)	Intel® Celeron® N3350 1.10/2.40 GHz
RAM (configuration option)	4 GB DDR3 SODIMM
Mass storage (configuration option)	without mass storage M.2 SSD, 128 GB
Interfaces	1x COM (RS-232/422/485) 2x COM (RS-232) 2x USB 2.0 2x USB 3.0
Monitor output	2x DisplayPort
Network	2x Ethernet (10/100/1000 Mbps), RJ45
Power supply unit	24 V DC ±20%
General data	
Degree of protection	IP20
Ambient temperature (operation)	0°C ... 50°C
Permissible humidity (operation)	5% ... 95% (non-condensing)
Mounting type	Front installation
Vibration (operation)	DIN EN 60068-2-6
Shock	15g, 11 ms in accordance with IEC 60068-2-27
EMC note	Class A product, see page 527

Ordering data

Description	Type	Order No.	Pcs./Pkt.
Panel PC			
- with Intel® Celeron® N3350 technology (dual-core)	**BL2 PPC 1000**	**2404845**	1
- with Intel® Pentium® N4200 technology (quad-core)	**BL2 PPC 2000**	**2404846**	1
- with Intel® Core™ i5-7442EQ technology (quad-core)	**BL2 PPC 7000**	**1016236**	1

Valueline panel PCs

Panel PCs with analog-resistive touch technology combine the advantages of a modern industrial PC with the operation and monitoring functions of a touch monitor. Typically installed in the front of the control cabinet, they provide monitoring and control directly on site.

Features:

- High system availability, thanks to a fanless design or convection booster, suitable for industrial applications and absence of moving parts
- Powerful Intel® Celeron® and Core™-i processors
- Large-scale compatibility with open IT standards, numerous interfaces and operating system options
- Display sizes from 12" (SVGA) to 24" (Full HD)
- High graphic performance with Intel HD graphics 4000

Notes:

You can find additional information about industrial PCs and the corresponding accessories in the product area of our website at phoenixcontact.net/products.

Configurable panel PC

Ex:

Technical data

Display data	
Display (configuration option)	30.7 cm/12.1" TFT 30.7 cm / 12.1"-TFT FRONT USB 38.1 cm / 15" TFT 38.1 cm / 15" TFT FRONT USB 38.1 cm / 15" TFT STAINLESS 38.1 cm / 15" TFT USB BK 43.0 cm/17" TFT 43.0 cm / 17" TFT FRONT USB 47.0 cm / 18.5" TFT 48.3 cm / 19"-TFT 48.3 cm / 19" TFT FRONT USB 54.6 cm / 21.5" TFT 60.9 cm / 24" TFT FRONT USB
Screen resolution	800 x 600 Pixel(s) (SVGA) 1024 x 768 Pixel(s) (XGA) 1280 x 1024 Pixel(s) (SXGA) 1366 x 768 Pixel(s) (WXGA) 1920 x 1080 Pixel(s) (Full HD)
Brightness	Dependent on configuration
Display backlight MTBF	Dependent on configuration
Touch technology	analog resistive (polyester)
Computer data	
RAM (configuration option)	4 GB DDR3 SODIMM 8 GB DDR3 SODIMM 16 GB DDR3 SODIMM
Mass storage (configuration option)	without mass storage CompactFlash®, 1 GB CompactFlash®, 2 GB CompactFlash®, 4 GB CompactFlash®, 8 GB CompactFlash®, 16 GB CompactFlash®, 32 GB SSD (SLC), 16 GB SSD (SLC), 32 GB 2.5" HDD SATA, 320 GB 2.5" HDD SATA, 500 GB 2.5" SSD (MLC), 150 GB 2.5" SSD (MLC), 240 GB 2.5" SSD (MLC), 480 GB
Interfaces	1x COM (RS-232/422/485) 3x USB 2.0 1x USB 3.0
Network	2x Ethernet (10/100/1000 Mbps), RJ45
Power supply unit	24 V DC ±20%
General data	
Degree of protection	IP65 (front), IP20 (back)
Ambient temperature (operation)	-20°C ... 50°C (configuration options can affect the operating temperature. See user manual for details)
Permissible humidity (operation)	5% ... 95% (non-condensing)
Mounting type	Front installation
Vibration (operation)	IEC 60068-2-27
Shock	15g, 11 ms impulse in accordance with IEC 60068-2-27
EMC note	Class A product, see page 527

Ordering data

Description	Type	Order No.	Pcs./Pkt.
Industrial panel PC (PPC) with resistive touch screen. Configurable options for display size, memory and mass storage.			
- with Intel® Celeron® N2930 technology	**VL PPC 3000**	2400184	1
- with Intel® Core™ i3-4010U technology	**VL PPC 2000**	2402760	1

IP65 panel PCs

The panel PCs in the Designline range combine high-performance technology and an attractive design. They are narrow, feature IP65 protection and multi-touch capability, and are always close to the action as they can be installed quickly and easily directly on the machine.

Thanks to their fanless and energy-efficient design, they are the ideal solution for future operating concepts in industrial systems: easy maintenance, custom configuration, and robust.

Additional features:

- Single or multi-touch screen
- Energy-efficient Intel® Core™ i7 processors
- Can be configured individually
- Fully enclosed housing with IP65 protection
- Extended temperature range (-20°C ... +45°C)
- User-friendly handling, thanks to the attractive and practical industrial design
- Easy access to all important components

Notes:

You can find additional information about industrial PCs and the corresponding accessories in the product area of our website at phoenixcontact.net/products.

Configurable panel PC

Technical data

Display data	
Display lighting type	LED
Touch technology	projective-capacitive, ten-touch control
Computer data	
Operating system (configuration option)	without operating system Windows® 7 Professional SP1 (32-bit), German Windows® 7 Professional SP1 (32-bit), English Windows® 7 Professional SP1 (64-bit), German Windows® 7 Professional SP1 (64-bit), English Windows® 7 Ultimate SP1 (64 bit), Multi-language Windows® 7 Ultimate SP1 (32-bit), Multi-language Windows® Embedded Standard 7 SP1 (32-bit), Multi-language Windows® Embedded Standard 7 SP1 (64-bit), Multi-language Windows® 10 IoT Enterprise LTSB 2015 (32-bit), Multi-language Windows® 10 IoT Enterprise LTSB 2015 (64-bit), Multi-language
Processor	Intel® Core™ i7-4650U 3.30 GHz
RAM (configuration option)	4 GB DDR3 SODIMM 8 GB DDR3 SODIMM 12 GB DDR3 SODIMM
Mass storage (configuration option)	without mass storage SSD (SLC), 4 GB SSD (SLC), 8 GB SSD (SLC), 16 GB SSD (SLC), 32 GB 2.5" SSD (MLC), 80 GB 2.5" SSD (MLC), 160 GB 2.5" HDD SATA, 320 GB
Interfaces	1x COM (RS-232/422/485) 4x USB 2.0 1x USB 3.0 1x Audio
Slots	without slots
Monitor output	without
Network	2x Ethernet (10/100/1000 Mbps), RJ45
Power supply unit	24 V DC ±20%
General data	
Degree of protection	IP65
Ambient temperature (operation)	0°C ... 45°C (with HDD) -20°C ... 45°C (with SSD)
Permissible humidity (operation)	5% ... 95% (non-condensing)
Mounting type	VESA MIS-D, 100
Vibration (operation)	1g with SSD, 0.5g with HDD, in accordance with EN 60068-2-6
Shock	15g, 11 ms in accordance with IEC 60068-2-27
EMC note	Class A product, see page 527

Ordering data

Description	Type	Order No.	Pcs./Pkt.
Panel PC			
- Display: 38.1 cm (15"), 1024 x 768 Pixel(s) (XGA)	**DL PPC15M 7000**	**2400017**	1
- Display: 47.0 cm (18.5"), 1366 x 768 Pixel(s) (WXGA)	**DL PPC18.5M 7000**	**2400015**	1
- Display: 54.6 cm (21.5"), 1920 x 1080 pixels (Full HD)	**DL PPC21.5M 7000**	**2400016**	1

Monitors with touch function

The monitors with a modern industrial design and with multi-touch display are suitable for operating concepts where the processor unit and display unit are physically separated. Thanks to the different display sizes, you will find the right monitor for your application.

Your advantages:
- System enhanced by an attractive design
- Robust and sturdy, thanks to glass front suitable for industrial use
- Implementation of state-of-the-art operating concepts, thanks to multi-touch support
- Easy integration into existing systems, thanks to standardized interfaces

Flat panel monitor with projected-capacitive multi-touch screen

Technical data

Display data	
Display lighting type	LED
Brightness	300 cd/m², typical (adjustable)
Display backlight MTBF	> 50000 h
Color spectrum	16.7 million colors
Touch technology	projective-capacitive, ten-touch control
Power supply unit	24 V DC
General data	
Degree of protection	IP65 (front), IP20 (back)
Ambient temperature (operation)	-10°C ... 60°C
Permissible humidity (operation)	10% ... 90% (non-condensing)
Mounting type	VESA MIS-D, 100
Vibration (operation)	1g
Shock	15g, 11 ms impulse
EMC note	Class A product, see page 527

Ordering data

Description	Type	Order No.	Pcs./Pkt.
Flat panel monitor with projected-capacitive multi-touch screen			
- Display: 39.6 cm (15.6"), 1366 x 768 Pixel(s) (WXGA)	**BL FPM 15.6**	2402980	1
- Display: 46.9 cm (18.5"), 1366 x 768 Pixel(s) (WXGA)	**BL FPM 18.5**	2402981	1
- Display: 54.6 cm (21.5"), 1920 x 1080 pixels (Full HD)	**BL FPM 21.5**	2400515	1

Tablet PCs

Tablet PCs suitable for industrial use are the ideal solution for working on the go indoors and outdoors. The new generation offers improved processor power and Full HD displays. Thanks to optimized energy efficiency, you can operate the devices for up to eight hours.

Your advantages:

- Work on the go without interruption, as the battery can be replaced during operation
- Large visualization, thanks to 13.3" display with Full HD resolution
- Optimum performance for every application, thanks to Intel® Celeron® and Intel® Core™ processors
- Stable connections via WLAN and Bluetooth
- Sound and proven handling, thanks to enclosed monocoque frame

Notes:

You can find additional information about industrial PCs and the corresponding accessories in the product area of our website at phoenixcontact.net/products.

Configurable tablet PC

Technical data

Display data	
Display	33.8 cm/13.3" TFT
Screen resolution	1920 x 1080 Pixel(s) (Full HD)
Display lighting type	LED
Display backlight MTBF	> 50000 h
Touch technology	projective-capacitive, ten-touch control
Computer data	
Operating system (configuration option)	without operating system Windows® 7 Ultimate (64-Bit) Windows® 10 IoT Enterprise Windows® Embedded Standard 7 (64-Bit)
Processor (configuration option)	Intel® Core™ i5 4300U 1.90 GHz Intel® Celeron® 2980U 1.60 Ghz
RAM (configuration option)	8 GB DDR3 4 GB DDR3 SODIMM
Mass storage	2.5" SSD, 120 GB (SATA)
Interfaces	2x USB 3.0 1x USB 3.0 inset WLAN 802.11 a/g/n Bluetooth 4.0 Class 1+2
Network	1x Ethernet (10/100/1000 Mbps), RJ45
Power supply unit	20 V/3.5 A external
General data	
Degree of protection	IP65 (on the front), IP53 (on the back)
Ambient temperature (operation)	0°C ... 40°C
Permissible humidity (operation)	10% ... 85% (non-condensing)
Mounting type	Mobile application

Ordering data

Description	Type	Order No.	Pcs./Pkt.
Tablet PC			
- Configurable	**ITC 8113**	2403738	1
Tablet PC, processor type: Intel® Core™ i5 4300U 1.90 GHz, RAM: 8 GB DDR3 - Windows® 7 Ultimate (64-bit)	**ITC 8113 PW7**	2402961	1
Tablet PC, processor type: Intel® Celeron® 2980U 1.60 GHz, RAM: 4 GB DDR3 SODIMM			
- Windows® 7 Ultimate (64-bit)	**ITC 8113 SW7**	2402957	1
- Windows® Embedded 8.1 Industry Pro (64-bit)	**ITC 8113 SWES8**	2402959	1

Accessories

Charging station, for simultaneous charging of two batteries	**ITC 8113 CHARGING STATION**	2403081	1
Battery, with charge level indicator	**ITC 8113 RECHARGEABLE BATTERY**	2403082	1
Power supply unit, for tablet PC, charging station and port replicator	**ITC 8113 POWER SUPPLY**	2403083	1
Port replicator for tablet PC, can be rotated and tilted, with 1x Ethernet (10/100/1000 Mbps) RJ45 and 4 x USB 2.0	**ITC 8113 PORTREPLICATOR**	2403313	1
Handle	**ITC 8113 HANDLE**	2403314	1
3-point strap for tablet PC	**ITC 8113 CARRYING STRAP**	2404751	1
Transport case	**ITC 8113 TRANSPORT CASE**	2404752	1

Mobile panel

new

Industrial PC for mobile applications

The HTP10 1000 mobile panel is equipped with ergonomic housing, a brilliant display, and integrated safety elements. With PC-level performance and Windows 10 IoT®, the mobile panel is the state-of-the-art solution for intuitive teach-in (starting and setting up the machine), startup, plus diagnostics and maintenance.

Your advantages:
- Ergonomic design
- Robust for harsh industrial environment
- Integrated safety functions
- Simple and intuitive operation
- Windows® 10 IoT Enterprise LTSB 2016 for the simple use of common visualization tools or C#, C++ for creating the application

Technical data

Display data	
Display	25.7 cm / 10.1" TFT
Screen resolution	1280 x 800 Pixel(s) (WXGA)
Display lighting type	LED
Touch technology	analog resistive (polyester)
Computer data	
Operating system	Windows® 10 IoT Enterprise LTSB 2016 (64-bit), Multi-language
Processor	Intel® Atom™ E3815 1.46 GHz
RAM	4 GB DDR3
Mass storage	Flash SSD, 32 GB
Interfaces	1x USB 2.0
Slots	1x SD
Network	1 x Ethernet (10/100 Mbps), RJ45
Power supply unit	24 V DC ±20%
General data	
Degree of protection	IP65
Ambient temperature (operation)	0°C ... 45°C
Mounting type	none
Vibration (operation)	1g, Criterion 1, in accordance with IEC 60068-2-6
Shock	15g, 11 ms, in accordance with EN 61131-2

Ordering data

Description	Type	Order No.	Pcs./Pkt.
Mobile panel			
	HTP10 1000	1047318	1

Accessories

Ethernet connecting cable			
- Length: 5.0 m	**HTP10 1000 CC5M**	1047320	1
- Length: 10.0 m	**HTP10 1000 CC10M**	1047373	1
Connection box			
	HTP10 1000 CB	1047323	1
Touch pens for tablet PC			
	HTP10 1000 TP	1047361	1
Wall bracket			
	HTP10 1000 WH	1047367	1

Web panels

The web panels for harsh environments with a powerful generation of processors and glass-film-glass touch technology offer performance and robustness for demanding applications. Operate and monitor your system in any environment, thanks to C1D2 certification for extreme operating conditions.

Web panels are inexpensive operator panels for basic operation and monitoring tasks.

Your advantages:

- Display can be read in direct sunlight
- Resistant to UV and IR radiation
- Extended temperature range
- Weatherproof, thanks to IP67 protection
- Resistant to environmental influences, such as salt spray, termites, and chemicals
- Can be operated when wearing work gloves

Rugged web panel

Technical data

		WP 06T/WT	WP 07T/WT
Display data			
Display		14.5 cm/5.7" TFT active	17.8 cm/7" TFT
Screen resolution		320 x 240 Pixel(s) (QVGA)	800 x 480 Pixel(s) (WVGA)
Display lighting type		LED	
Brightness		400 cd/m², typical (adjustable)	350 cd/m², typical (adjustable)
Display backlight MTBF		40000 h	
Color spectrum		65536 colors	
Touch technology		Analog resistive (GFG), anti-reflective coating	
Computer data			
Operating system		Windows® CE 5.0	
Processor		Arm9™, 184 MHz	
RAM		128 MB SDRAM	
Mass storage		Flash, 64 MB	
Interfaces		2x USB host 2.0	
Network		1 x Ethernet (10/100 Mbps), RJ45	
Power supply unit		24 V DC ±20%	
Dimensions			
External dimensions (front plate)	W / H / D	195 mm / 153 mm / 5 mm	234 mm / 173 mm / 5 mm
Installation cutout	W / H / D	161 mm / 119 mm / 42 mm	200 mm / 140 mm / 42 mm
General data			
Degree of protection		IP67 (front), IP20 (back)	
Ambient temperature (operation)		-20°C ... 70°C	
Mounting type		Front installation	
Vibration (operation)		DIN EN 60068-2-6	
Shock		DIN EN 60068-2-27	

Ordering data

Description	Type	Order No.	Pcs./Pkt.
Web panel, extended temperature range			
- Display: 14.5 cm (5.7"), 320 x 240 Pixel(s) (QVGA)	**WP 06T/WT**	**2400163**	1
- Display: 17.8 cm (7"), 800 x 480 Pixel(s) (WVGA)	**WP 07T/WT**	**2400164**	1

Accessories

Mounting kit, including hardware for installation			
- panel installation	**HMI SCB MOUNTING KIT 8**	**2701387**	1

Touch panels

The touch panels for harsh environments with a powerful generation of processors and glass-film-glass touch technology offer performance and robustness for demanding applications. Operate and monitor your system in any environment, thanks to C1D2 certification for extreme operating conditions.

Your advantages:

- Display can be read in direct sunlight
- Resistant to UV and IR radiation
- Extended temperature range
- Weatherproof, thanks to IP67 or IP65 protection
- Resistant to environmental influences, such as salt spray, termites, and chemicals
- Can be operated when wearing work gloves

Rugged touch panel

Technical data

	TP 3120W/WT	TP 3120W/WT-65
Display data		
Display lighting type	LED	
Touch technology	Analog resistive (GFG)	
Computer data		
Operating system	Windows® Embedded Compact 7	
Processor	Arm® Cortex®-A8, 1000 MHz	
RAM	512 MB LPDDR SDRAM	
Mass storage	NAND-Flash, 1 GB	
Interfaces	2x USB 2.0	
Network	1 x Ethernet (10/100 Mbps), RJ45	
Power supply unit	24 V DC ±20%	
General data		
Degree of protection	IP67 (front), IP20 (back)	IP65 (front), IP20 (back)
Ambient temperature (operation)	-20°C ... 70°C	
Mounting type	Bolt fixing	Front installation
Vibration (operation)	1g, in accordance with EN 60068-2-6	
Shock	15g, in accordance with IEC 60068-2-27	

Ordering data

Description	Type	Order No.	Pcs./Pkt.
Touch panel, extended temperature range, degree of protection: IP67			
- Display: 10.92 cm (4.3"), 480 x 272 Pixel(s) (WQVGA)	**TP 3043W/WT**	2404286	1
- Display: 14.5 cm (5.7"), 640 x 480 Pixel(s) (VGA)	**TP 3057V/WT**	2403464	1
- Display: 17.8 cm (7"), 800 x 480 Pixel(s) (WVGA)	**TP 3070W/WT**	2403465	1
- Display: 30.7 cm (12.1"), 1280 x 800 Pixel(s) (WXGA)	**TP 3120W/WT**	1029308	1
- Display: 30.7 cm (12.1"), 800 x 600 Pixel(s) (SVGA)	**TP 3121S/WT**	2403466	1
- Display: 38.1 cm (15"), 1024 x 768 Pixel(s) (XGA)	**TP 3150S/WT**	1029281	1
Touch panel, extended temperature range, degree of protection: IP65			
- Display: 14.5 cm (5.7"), 640 x 480 Pixel(s) (VGA)	**TP 3057V/WT-65**	1044278	1
- Display: 17.8 cm (7"), 800 x 480 Pixel(s) (WVGA)	**TP 3070W/WT-65**	1044266	1
- Display: 30.7 cm (12.1"), 1280 x 800 Pixel(s) (WXGA)	**TP 3120W/WT-65**	1029352	1
- Display: 30.7 cm (12.1"), 800 x 600 Pixel(s) (SVGA)	**TP 3121S/WT-65**	1029343	1
- Display: 38.1 cm (15"), 1024 x 768 Pixel(s) (XGA)	**TP 3150S/WT-65**	1029309	1

Accessories

Mounting kit, including hardware for installation			
- panel installation	**HMI SCB MOUNTING KIT 6**	2701385	1
- panel installation	**HMI SCB MOUNTING KIT 8**	2701387	1

Rugged panel PC

new

Configurable operator interface

With its high-end design and superior quality, the VMT 9000 series has been specifically developed for the target markets of logistics as well as agricultural and construction machinery. The terminals are characterized by their particularly compact and extremely robust design, ensuring that they will function reliably even in the harshest environments.

Your advantages:

- Display can be read in direct sunlight
- Can be operated when wearing work gloves
- Convenient operation via four freely assignable front buttons
- Screwless design for easy cleaning
- Weatherproof, thanks to IP66 protection

Technical data

Display data	
Display (configuration option)	26,4 см / 10,4"-TFT 30.7 cm/12.1" TFT 38.1 cm/15" TFT
Screen resolution	1024 x 768 Pixel(s) (XGA) 10.4"; 12.1"; 15" 1280 x 800 Pixel(s) (WXGA) 12.1"
Display lighting type	LED
Brightness (configuration option)	500 cd/qm (10.4") 600 cd/qm (12.1") 400 cd/qm (12.1" wide) 300 cd/qm (15")
Display backlight MTBF	> 50000 h
Color spectrum	16.2 million colors
Touch technology (configuration option)	Projective-capacitive (PCAP) analog resistive (polyester)
Computer data	
Operating system (configuration option)	without operating system Windows® 10 IoT Enterprise
Processor	Intel® Atom™ x7-E3950 2.0 GHz
RAM (configuration option)	4 GB LPDDR4 8 GB LPDDR4
Mass storage (configuration option)	Flash eMMC, 64 GB (integrated) Flash eMMC, 64 GB + M.2 SSD, 128 GB
Interfaces	1x COM (RS-232) 3x USB 3.0 1x USB 3.0 on the front with IP65 cover (can be deactivated via software)
Optional interfaces (configuration option)	1x COM (RS-232) LTE/GPS module Wi-Fi 802.11a/b/g/n/ac + Bluetooth
Network	2x Ethernet (10/100/1000 Mbps), RJ45
Power supply unit	12 ... 48 V DC (9 .... 60 V DC IN)
General data	
Degree of protection	IP66
Ambient temperature (operation)	-30°C ... 60°C
Mounting type	VESA MIS-D, 75 (integrated in back panel as a mounting option)
Vibration (operation)	Class 5M3 in accordance with EN 60721-3-5
Shock	Class 5M3 in accordance with EN 60721-3-5

Ordering data

Description	Type	Order No.	Pcs./Pkt.
Rugged panel PC, configurable			
	VMT 9000	1084510	1

Box PCs

The box PCs with IECEx and ATEX Zone 2/22 approvals have been specifically developed for use in potentially explosive areas. The devices for the Ex area are available in various performance classes.

Your advantages:

- High system availability, thanks to a fanless design which is suitable for industrial applications and the absence of moving parts
- Approvals for use in the Ex area of Zone 2/22 without additional measures
- Processor performance suited to the application: with the latest generation of powerful and energy-efficient Intel® Atom™, Celeron® or Core™ i processors
- Flexible configuration, thanks to a multitude of equipment versions

Notes:

You can find additional information about industrial PCs and the corresponding accessories in the product area of our website at phoenixcontact.net/products.

Configurable box PC

Ex:

Technical data

Computer data	
Operating system (configuration option)	without operating system Windows® 7 Professional SP1 (64-Bit), German Windows® 7 Professional SP1 (64-bit), English Windows® 7 Ultimate SP1 (64 bit), Multi-language Windows® 7 Ultimate SP1 (32-bit), Multi-language Windows® 7 Professional SP1 (32-bit), English Windows® 7 Professional SP1 (32-bit), German Windows® Embedded Standard 7 SP1 (32-bit), Multi-language Windows® Embedded Standard 7 SP1 (64-bit), Multi-language Windows® 10 IoT Enterprise LTSB 2015 (32-bit), Multi-language Windows® 10 IoT Enterprise LTSB 2015 (64-bit), Multi-language
RAM (configuration option)	4 GB DDR3 SODIMM 8 GB DDR3 SODIMM 16 GB DDR3 SODIMM
Mass storage (configuration option)	without mass storage SSD (SLC), 4 GB SSD (SLC), 8 GB SSD (SLC), 16 GB SSD (SLC), 32 GB 2.5" HDD, 160 GB (SATA) 2.5" SSD, 240 GB 2.5" SSD, 480 GB
Interfaces	1x COM (RS-232/422/485) 2x USB 2.0 2x USB 3.0
Optional interfaces (configuration option)	without optional interface 2x COM (RS-232), 1x COM (RS-232/422/485)
Slots	PCI/PCIe optional
Monitor output	2x DisplayPort
Network	2x Ethernet (10/100/1000 Mbps), RJ45
Power supply unit	24 V DC ±20%
General data	
Degree of protection	IP30
Ambient temperature (operation)	-10°C ... 50°C (with SSD) 0°C ... 45°C (with HDD)
Permissible humidity (operation)	5% ... 95% (non-condensing)
Mounting type (configuration option)	Bookshelf mounting Wall mounting
Vibration (operation)	DIN EN 60068-2-6
Shock	15g, 11 ms in accordance with IEC 60068-2-27
EMC note	Class A product, see page 527

Ordering data

Description	Type	Order No.	Pcs./Pkt.
Industrial PC			
- with Intel® Atom™ E3845 technology	**VL2 BPC 1000 EX**	1054028	1
- with Intel® Celeron® N2930 technology	**VL2 BPC 2000 EX**	1054027	1
- with Intel® Core™ i3-4010U technology	**VL2 BPC 3000 EX**	1054025	1
- with Intel® Core™ i5-4300U technology	**VL2 BPC 7000 EX**	1054024	1
- with Intel® Core™ i7-6822EQ technology	**VL2 BPC 9000 EX**	1054023	1

Valueline panel PCs

The panel PCs with IECEx and ATEX Zone 2/22 approvals have been specifically developed for use in potentially explosive areas. The devices for the Ex area are available in various performance classes.

The robust panel PCs have widescreen displays with PCAP touch technology.

Your advantages:

- High system availability, thanks to a fanless design which is suitable for industrial applications and the absence of moving parts
- Approvals for use in the Ex area of Zone 2/22 without additional measures
- Processor performance suited to the application: with the latest generation of powerful and energy-efficient Intel® Atom™ processors
- Flexible configuration, thanks to a multitude of equipment versions
- Unchanged display dimensions enable easy integration into existing applications

Notes:

You can find additional information about industrial PCs and the corresponding accessories in the product area of our website at phoenixcontact.net/products.

Configurable panel PC with Intel® Atom™E3845 technology

Technical data

Display data	
Display lighting type	LED
Color spectrum	16.7 million colors
Touch technology	projective-capacitive, ten-touch control
Computer data	
Operating system (configuration option)	without operating system Windows® 7 Professional SP1 (64-Bit), German Windows® 7 Professional SP1 (64-bit), English Windows® 7 Ultimate SP1 (64 bit), Multi-language Windows® 7 Ultimate SP1 (32-bit), Multi-language Windows® 7 Professional SP1 (32-bit), English Windows® 7 Professional SP1 (32-bit), German Windows® Embedded Standard 7 SP1 (32-bit), Multi-language Windows® Embedded Standard 7 SP1 (64-bit), Multi-language Windows® 10 IoT Enterprise LTSB 2015 (32-bit), Multi-language Windows® 10 IoT Enterprise LTSB 2015 (64-bit), Multi-language
Processor	Intel® Atom™ E3845 1.91 GHz
RAM	4 GB DDR3
Mass storage (configuration option)	SATA DOM SSD (SLC), 8 GB SATA DOM SSD (SLC),16 GB SATA DOM SSD (SLC), 32 GB SATA DOM SSD (MLC), 64 GB
Interfaces	1x COM (RS-232/422/485) 2x USB 2.0 1x USB 3.0
Optional interfaces (configuration option)	without optional interface 1x COM (RS-232), 1x COM (RS-485), 2x CAN 1x COM (RS-232), 1x COM (RS-485)
Slots	1x SD
Monitor output	1x DisplayPort
Network	2x Ethernet (10/100/1000 Mbps), RJ45
Power supply unit	24 V DC ±20%
General data	
Degree of protection	IP66 (front), IP30 (back)
Ambient temperature (operation)	0°C ... 45°C (with HDD) 0°C ... 50°C (with SSD)
Permissible humidity (operation)	20% ... 85% (non-condensing)
Mounting type	Front installation
Vibration (operation)	1g with SSD, 0.5g with HDD, in accordance with EN 60068-2-6
Shock	DIN EN 60068-2-27

Ordering data

Description	Type	Order No.	Pcs./Pkt.
Industrial panel PC (PPC) with projected capacitive touch screen, configurable			
- Display: 17.8 cm (7"), 800 x 480 Pixel(s) (WVGA)	**VL2 PPC7 1000 EX**	1054096	1
- Display: 22.9 cm (9"), 800 x 480 Pixel(s) (WVGA)	**VL2 PPC9 1000 EX**	1054095	1
- Display: 30.7 cm (12.1"), 1280 x 800 Pixel(s) (WXGA)	**VL2 PPC12 1000 EX**	1054094	1

Valueline panel PCs

The panel PCs with IECEx and ATEX Zone 2/22 approvals have been specifically developed for use in potentially explosive areas. The devices for the Ex area are available in various performance classes.

The robust panel PCs have widescreen displays with PCAP touch technology.

Your advantages:

- High system availability, thanks to a fanless design which is suitable for industrial applications and the absence of moving parts
- Approvals for use in the Ex area of Zone 2/22 without additional measures
- Processor performance suited to the application: with the latest generation of powerful and energy-efficient Intel® Atom™, Celeron® or Core™ i processors
- Flexible configuration, thanks to a multitude of equipment versions
- Can be extended via PCI/PCIe slot
- Unchanged display dimensions enable easy integration into existing applications

Notes:

You can find additional information about industrial PCs and the corresponding accessories in the product area of our website at phoenixcontact.net/products.

Configurable panel PC

Ex:

Technical data

Display data	
Display (configuration option)	39.6 cm/15.6" TFT 47.0 cm / 18.5" TFT 54.6 cm/21.5" TFT
Screen resolution	1366 x 768 Pixel(s) (WXGA) 15.6" TFT; 18.5" TFT 1920 x 1080 Pixel(s) (Full HD)
Display lighting type	LED
Brightness	300 cd/m², typical (adjustable)
Display backlight MTBF	> 50000 h (dependent on configuration)
Color spectrum	16.7 million colors
Touch technology	projective-capacitive, ten-touch control
Computer data	
Operating system (configuration option)	without operating system Windows® 7 Professional SP1 (64-Bit), German Windows® 7 Professional SP1 (64-bit), English Windows® 7 Ultimate SP1 (64 bit), Multi-language Windows® 7 Ultimate SP1 (32-bit), Multi-language Windows® 7 Professional SP1 (32-bit), English Windows® 7 Professional SP1 (32-bit), German Windows® Embedded Standard 7 SP1 (32-bit), Multi-language Windows® Embedded Standard 7 SP1 (64-bit), Multi-language Windows® 10 IoT Enterprise LTSB 2015 (32-bit), Multi-language Windows® 10 IoT Enterprise LTSB 2015 (64-bit), Multi-language
RAM (configuration option)	4 GB DDR3 SODIMM 8 GB DDR3 SODIMM 16 GB DDR3 SODIMM
Mass storage (configuration option)	without mass storage SSD (SLC), 4 GB SSD (SLC), 8 GB SSD (SLC), 16 GB SSD (SLC), 32 GB 2.5" HDD, 160 GB (SATA) 2.5" SSD, 150 GB 2.5" SSD, 240 GB 2.5" SSD, 480 GB
Interfaces	1x COM (RS-232/422/485) 2x USB 2.0 2x USB 3.0
Optional interfaces (configuration option)	without optional interface 2x COM (RS-232), 1x COM (RS-232/422/485)
Slots	PCI/PCIe optional
Monitor output	2x DisplayPort
Network	2x Ethernet (10/100/1000 Mbps), RJ45
Power supply unit	24 V DC ±20%
General data	
Degree of protection	IP66 (front), IP30 (back)
Ambient temperature (operation)	0°C ... 45°C (with HDD) -10°C ... 50°C (with SSD)
Permissible humidity (operation)	5% ... 95% (non-condensing)
Mounting type	Front installation
Vibration (operation)	1g with SSD, 0.5g with HDD, in accordance with EN 60068-2-6
Shock	DIN EN 60068-2-27
EMC note	Class A product, see page 527

Ordering data

Description	Type	Order No.	Pcs./Pkt.
Industrial panel PC (PPC) with projected capacitive touch screen (ten-point touch). Configurable options for display size, screen resolution, and mass storage.			
- with Intel® Atom™ E3845 technology	**VL2 PPC 1000 EX**	1050366	1
- with Intel® Celeron® N2930 technology	**VL2 PPC 2000 EX**	1050367	1
- with Intel® Core™ i3-4010U technology	**VL2 PPC 3000 EX**	1050368	1
- with Intel® Core™ i5-4300U technology	**VL2 PPC 7000 EX**	1050365	1
- with Intel® Core™ i7-6822EQ technology	**VL2 PPC 9000 EX**	1050364	1

Touch panels

The powerful HMIs in the TPM 3000 series are designed for demanding use on ships. New display sizes, various configuration options, and a wide range of functions ensure user-friendly and reliable operation, monitoring, and alarms when seafaring.

Features:

- Light-absorbing front plates
- Dimmable backlight
- Certifications in accordance with ABS, BV, DNV-GL, LR, RINA
- Certified compass safe distance in accordance with DIN EN 60945
- Acoustic warning from integrated horn
- All common communication standards supported
- Floating output
- 4:3 or 16:9 display format
- Versions with black front incl. dimming buttons and horn or with silver front and no buttons

Configurable maritime touch panel

Technical data

Display data	
Display lighting type	LED
Touch technology	analog resistive (polyester)
Computer data	
Operating system	Windows® Embedded Compact 7
Processor	Arm® Cortex®-A8, 1000 MHz
RAM	512 MB LPDDR RAM
Mass storage	NAND-Flash, 1 GB
Interfaces	2x USB host 2.0
Optional interfaces (configuration option)	without optional interface 1 x COM (RS-232), 1 x COM (RS-422; 4-wire, full duplex) 1 x COM (RS-232), 1 x COM (RS-422; 4-wire, full duplex), 2 x CAN 2x CAN
User software (configuration option)	Visu+ MicroBrowser
Network	1 x Ethernet (10/100 Mbps), RJ45
Power supply unit	24 V DC ±20%
General data	
Front panel (configuration option)	Aluminum (black anodized) with dimming buttons and horn Aluminum (naturally anodized) without dimming buttons and horn
Degree of protection	IP65 (front), IP20 (back)
Ambient temperature (operation)	-20°C ... 60°C (front aluminum, black anodized)
Mounting type	Front installation
Vibration (operation)	1g, in accordance with EN 60068-2-6
Shock	15g, in accordance with IEC 60068-2-27
EMC note	Class A product, see page 527

Ordering data

Description	Type	Order No.	Pcs./Pkt.
Touch panel with graphics-capable display, for maritime applications			
- Display: 10.92 cm (4.3"), 480 x 272 Pixel(s) (WQVGA)	**TPM 3043**	2404516	1
- Display: 14.5 cm (5.7"), 640 x 480 Pixel(s) (VGA)	**TPM 3057**	2404517	1
- Display: 17.8 cm (7"), 800 x 480 Pixel(s) (WVGA)	**TPM 3070**	2404518	1
- Display: 22.9 cm (9"), 800 x 480 Pixel(s) (WVGA)	**TPM 3090**	2404519	1
- Display: 26.4 cm (10.4"), 800 x 600 Pixel(s) (SVGA)	**TPM 3105**	2404520	1
- Display: 30.7 cm (12.1"), 800 x 600 Pixel(s) (SVGA)	**TPM 3121**	2404521	1
- Display: 30.7 cm (12.1"), 1280 x 800 Pixel(s) (WXGA)	**TPM 3120**	2404522	1
- Display: 38.1 cm (15"), 1024 x 768 Pixel(s) (XGA)	**TPM 3150**	2404524	1
- Display: 39.05 cm (15.4"), 1280 x 800 Pixel(s) (WXGA)	**TPM 3154**	2404525	1

Accessories

Stylus for touch screens	**TOUCH PEN**	2701379	1
USB memory stick, memory capacity 8 GB	**USB FLASH DRIVE**	2402809	1
CMOS battery	**HMI BATTERY**	2701383	1
Mounting kit, including hardware for installation			
- panel installation	**HMI SCB MOUNTING KIT 6**	2701385	1
Protective foil for touch screen	**7" DISPLAY PROTECTIVE FOIL**	2701374	1

Lighting and signaling

The LED lights, signal lights, and signal towers from Phoenix Contact are highly efficient, durable, and maintenance-free. They therefore represent the perfect solution for optimum application lighting and clear status signaling.

LED enclosure lights

Optimum illumination of the control cabinet ensures fast troubleshooting and wiring errors can be avoided. The LED enclosure lights in the PLD (Phoenix Contact Lighting Devices) product range provide optimum illumination inside your control cabinets right down to the bottom. Thanks to tool-free mounting, the lights can be mounted in no time at all.

LED machine lights

The LED machine lights from the PLD (Phoenix Contact Lighting Devices) product range illuminate your machines efficiently, homogeneously, and without glare. Select your machine lights from the comprehensive range: tailored to your application in terms of size, length, degree of protection, and beam angle.

LED tower lighting

The LED lights illuminate towers and shafts reliably and efficiently.

LED signal lights

With the robust LED signal lights, you can design reliable and energy-efficient signaling systems for maritime use, e.g., for locks, movable bridges, and waterways, in accordance with the Machinery Directive.

LED signal towers

Thanks to the considerable signal diversity of the modular signal towers in the PSD (Phoenix Contact Signaling Devices) product range, you can implement unambiguous signaling of your machine and system states. This reduces downtimes and avoids unnecessary costs.

Product overview	**498**
Enclosure lights	
Class 400 LED enclosure lights	**499**
Class 600 LED enclosure lights	**500**
Machine lights	
Class 100 LED machine lights	**502**
Class 200 LED machine lights	**504**
Tower lighting	
LED tower lighting	**508**
Signal lights	
LED signal lights, Ø 174 mm	**510**
LED signal lights, Ø 272 mm	**512**
Signal towers	
Visual signal elements	**515**
Audible signal elements	**518**
Connection and mounting elements	**520**

Product overview

Enclosure lights

Class 400 LED enclosure lights
Page 499

Plug-in power supply unit for
class 400 LED enclosure lights
Page 499

Class 600 LED enclosure lights
- With motion detector
Page 500

Class 600 LED enclosure lights
- With motion detector and socket
Page 501

Machine lights

Class 100 LED machine lights
Width 23 mm, degree of protection IP67
Page 502

Class 200 LED machine lights
Ø 40 mm, degree of protection IP67
Page 504

Class 200 LED machine lights
Ø 70 mm, degree of protection IP67
Page 506

Class 200 LED machine lights
Length 284 mm, degree of protection IP69
Page 505

Tower lights

LED tower lighting
Page 508

Signal lights

LED signal lights, Ø 174 mm
Page 510

LED signal lights, Ø 272 mm
Page 512

Signal towers

Visual signal elements
Page 515

Audible signal elements
Page 518

Voice output element
Page 519

Connection and mounting elements
- For surface and tube mounting
Page 520

Class 400 LED enclosure lights

These LED lights are intended for use inside a control cabinet and provide optimum and efficient illumination right down to the bottom of the cabinet.

Thanks to the various lengths and swivelable light emission window, the lights can be adapted to different control cabinet widths and heights as well as to the depth of the control cabinet plate.

Your advantages

- Tool-free mounting, thanks to clip fastening
- Series connection reduces cabling effort for control cabinets arranged in series
- Optimum lighting of the control cabinet, thanks to integrated prismatics and capacity to swivel
- LED service life of 50,000 h (L70 value) prevents bulb replacement

Length 250 mm / 375 mm / 500 mm

Technical data

	PLD...250	PLD...375	PLD...500
Power supply for module electronics			
Supply voltage		24 V DC	
Power consumption	1.5 W	3 W	5 W
Light properties			
Source of light type		LED	
Service life, lighting appliance		50,000 h (L70)	
Number of LEDs	5	12	20
Color temperature		5000 K	
Color rendering index		75	
Net luminous flux	140 lm	340 lm	560 lm
General data			
Connection method		M8 connector (snap-in)	
Weight	120 g	170 g	220 g
Protection class		III	
Degree of protection		IP20	
Width		23 mm	
Height		38 mm	
Length	250 mm	375 mm	500 mm
Mounting position		any	
Ambient temperature (operation)		-25°C ... 60°C	

Ordering data

Description	Type	Order No.	Pcs./Pkt.
LED enclosure light			
- Length: 250 mm	**PLD E 400 W 250**	2702221	1
- Length: 375 mm	**PLD E 400 W 375**	2702222	1
- Length: 500 mm	**PLD E 400 W 500**	2702223	1

Accessories

Mounting set, with magnets	**PLD E 400-ME MM**	2702312	1
Mounting set, with screws and washers	**PLD E 400-ME SM**	2702313	1
Mounting set (replacement part), with clip retainers	**PLD E 400-ME CM**	2702314	1
Sensor/actuator cable, 3 m, free cable end with ferrules	**SAC-3P- 3,0-PUR/M 8SIFS AE**	1417698	1
Sensor/actuator cable, 0.6 m	**SAC-3P-M 8MS/ 0,6-PUR/M 8SIFS**	1417699	1
Sensor/actuator cable, 1 m	**SAC-3P-M 8MS/ 1,0-PUR/M 8SIFS**	1417700	1
Sensor/actuator cable, 3 m	**SAC-3P-M 8MS/ 3,0-PUR/M 8SIFS**	1417701	1
Door position switch, 3 m cable with free cable end, 0.6 m cable with M8 socket	**PLD E 400-DS-3,0/FS/0,6**	2702336	1
Door position switch, 1 m cable with M8 connector, 0.6 m cable with M8 socket	**PLD E 400-DS-MS/1,0-FS/0,6**	2702337	1
Plug-in power supply unit 12 W, with adapter for EU, GB, US, AU	**PLD E 400-PS/1AC/24DC/12W**	2702435	1
Plug-in power supply unit 30 W, with adapter for EU, GB, US, AU	**PLD E 400-PS/1AC/24DC/30W**	2702436	1

Class 600 LED enclosure lights

These LED lights are intended for use inside a control cabinet and provide optimum and efficient illumination right down to the bottom of the cabinet.

Thanks to the integrated motion detector and integrated socket, you can save cabling material and cabling time.

Your advantages

- Tool-free mounting, thanks to the patented snap-in hook system
- Worldwide use, thanks to AC wide range input
- Integrated motion detector saves on MRP and installation costs for door position switches
- Socket enables the operation of external devices even when power is disconnected to the control cabinet
- Series connection reduces cabling effort for control cabinets arranged in series
- Optimum lighting of the control cabinet, thanks to integrated optics
- LED service life of 50,000 h (L70 value) prevents bulb replacement

Length: 265 mm

Technical data

Power supply for module electronics	
Supply voltage range	85 V AC ... 265 V AC (50/60 Hz)
Power consumption	9.8 W
Light properties	
Source of light type	LED
Service life, lighting appliance	50,000 h (L70)
Number of LEDs	23
Color temperature	4000 K
Color rendering index	85
Net luminous flux	685 lm
General data	
Connection method	Installation coupler
Weight	650 g
Protection class	I
Degree of protection	IP20
Width	91 mm
Height	44 mm
Length	265 mm
Mounting position	any
Ambient temperature (operation)	-25°C ... 60°C

Ordering data

Description	Type	Order No.	Pcs./Pkt.
LED enclosure light, with motion detector			
- Length: 265 mm	**PLD E 608 W 265**	2702224	1
LED enclosure light, with motion detector and socket			
- Length: 315 mm, with type F socket (CEE 7/4)			
- Length: 315 mm, with type E socket (CEE 7/5)			
- Length: 315 mm, with type B socket (NEMA 5-15)			

Accessories

Mounting set, with magnets	**PLD E 608-ME MM**	2702315	1
Mounting set, with screws and washers	**PLD E 608-ME SM**	2702316	1
Mounting set (replacement part), mounting carriage with snap-in hooks	**PLD E 608-ME SFM**	2702317	1
Connector, for series connection, black, 3-pos.	**PLD E 608-CO-MS**	2702308	5
Socket, for power supply and series connection, black, 3-pos.	**PLD E 608-CO-FS**	2702309	5
T-distributor, with 2 sockets and one connector for series connection, black, 3-pos.	**PLD E 608-CO-MS/FS/FR**	2702310	5
Cable, for connecting to the supply voltage, 3 m long	**PLD E 608-CA-3,0/FS AM**	2702302	1
Cable for series connection, 0.6 m long	**PLD E 608-CA-MS/0,6/FS AM**	2702303	1
Cable for series connection, 1 m long	**PLD E 608-CA-MS/1,0/FS AM**	2702304	1
Cable for series connection, 4 m long	**PLD E 608-CA-MS/4,0/FS AM**	2702305	1
Cable, for connecting to the supply voltage, 3 m long, with UL approval	**PLD E 608-CA-3,0/FS/UL**	2702306	1
Cable for series connection, 0.6 m long, with UL approval	**PLD E 608-CA-MS/0,6/FS/UL**	2702307	1

Length: 315 mm,
type F socket (CEE 7/4)

Length: 315 mm,
type E socket (CEE 7/5)

Length: 315 mm,
type B socket (NEMA 5-15)

EAC

c UL us

Technical data

85 V AC ... 265 V AC (50/60 Hz)
9.8 W

LED
50,000 h (L70)
23
4000 K
85
685 lm

Installation coupler
770 g
I
IP20
91 mm
44 mm
315.4 mm
any
-25°C ... 60°C

Ordering data

Type	Order No.	Pcs./Pkt.
PLD E 608 W 315/F	2702226	1

Accessories

PLD E 608-ME MM	2702315	1
PLD E 608-ME SM	2702316	1
PLD E 608-ME SFM	2702317	1
PLD E 608-CO-MS	2702308	5
PLD E 608-CO-FS	2702309	5
PLD E 608-CO-MS/FS/FR	2702310	5
PLD E 608-CA-3,0/FS AM	2702302	1
PLD E 608-CA-MS/0,6/FS AM	2702303	1
PLD E 608-CA-MS/1,0/FS AM	2702304	1
PLD E 608-CA-MS/4,0/FS AM	2702305	1

Technical data

85 V AC ... 265 V AC (50/60 Hz)
9.8 W

LED
50,000 h (L70)
23
4000 K
85
685 lm

Installation coupler
770 g
I
IP20
91 mm
44 mm
315.4 mm
any
-25°C ... 60°C

Ordering data

Type	Order No.	Pcs./Pkt.
PLD E 608 W 315/E	2702228	1

Accessories

PLD E 608-ME MM	2702315	1
PLD E 608-ME SM	2702316	1
PLD E 608-ME SFM	2702317	1
PLD E 608-CO-MS	2702308	5
PLD E 608-CO-FS	2702309	5
PLD E 608-CO-MS/FS/FR	2702310	5
PLD E 608-CA-3,0/FS AM	2702302	1
PLD E 608-CA-MS/0,6/FS AM	2702303	1
PLD E 608-CA-MS/1,0/FS AM	2702304	1
PLD E 608-CA-MS/4,0/FS AM	2702305	1

Technical data

100 V AC ... 125 V AC (50/60 Hz)
9.8 W

LED
50,000 h (L70)
23
4000 K
85
685 lm

Installation coupler
770 g
I
IP20
91 mm
44 mm
315.4 mm
any
-25°C ... 60°C

Ordering data

Type	Order No.	Pcs./Pkt.
PLD E 608 W 315/B	2702227	1

Accessories

PLD E 608-ME MM	2702315	1
PLD E 608-ME SM	2702316	1
PLD E 608-ME SFM	2702317	1
PLD E 608-CO-MS	2702308	5
PLD E 608-CO-FS	2702309	5
PLD E 608-CO-MS/FS/FR	2702310	5
PLD E 608-CA-3,0/FS AM	2702302	1
PLD E 608-CA-MS/0,6/FS AM	2702303	1
PLD E 608-CA-MS/1,0/FS AM	2702304	1
PLD E 608-CA-MS/4,0/FS AM	2702305	1
PLD E 608-CA-3,0/FS/UL	2702306	1
PLD E 608-CA-MS/0,6/FS/UL	2702307	1

Class 100 LED machine lights

These LED lights are designed for use inside machinery. They provide surface illumination of the interior of the machine.

Your advantages

- Narrow design enables mounting even in confined spaces
- Ready to connect by means of punched-on 3 m supply line
- Focused illumination, thanks to swivel action
- IP67 protection enables use even in wet environments
- ETL approval permits use on the North American market
- Particularly economical, thanks to energy-efficient LED technology and an LED service life of at least 50,000 h

Length 196 mm

Length 336 mm

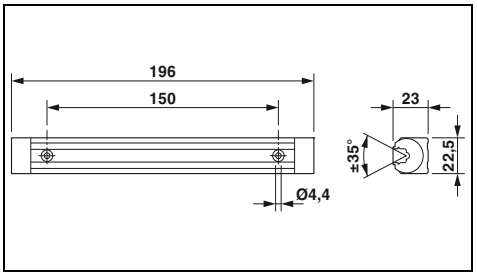

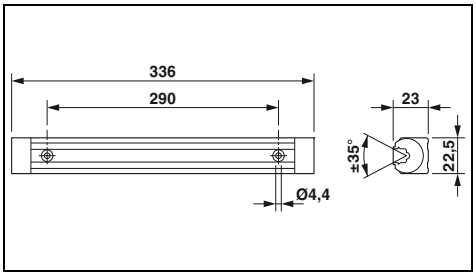

	Technical data	Technical data
Power supply for module electronics		
Supply voltage	24 V DC	24 V DC
Supply voltage range	22 V DC ... 26 V DC	22 V DC ... 26 V DC
Current consumption	typ. 0.15 A (at 24 V DC)	typ. 0.3 A (at 24 V DC)
Power consumption	approx. 3.5 W (at 24 V DC)	approx. 7 W (at 24 V DC)
Light properties		
Source of light type	LED	LED
Service life, lighting appliance	50,000 h (L70)	50,000 h (L70)
Number of LEDs	6	12
Light color	daylight white	daylight white
Color temperature	6200 K ±10%	6200 K ±10%
Color rendering index	75	75
Illumination	max. 206 lx (50 cm distance)	max. 391 lx (50 cm distance)
Average illumination	89 lx (distance of 50 cm over 1 m² area)	169 lx (distance of 50 cm over 1 m² area)
Emission angle	95 ° (C0-C180) 105 ° (C90-C270)	95 ° (C0-C180) 105 ° (C90-C270)
Energy efficiency class	A+	A+
General data		
Connection method	free cable end	free cable end
Weight	0.2 kg	0.4 kg
Degree of protection	IP67	IP67
Mounting position	any	any
Ambient temperature (operation)	0°C ... 40°C	0°C ... 40°C

	Ordering data			Ordering data		
Description	Type	Order No.	Pcs./Pkt.	Type	Order No.	Pcs./Pkt.
LED machine light						
	PLD M 160 W-95/105 196	2702475	1	**PLD M 160 W-95/105 336**	2702476	1

Length 616 mm

Length 896 mm

Length 1176 mm

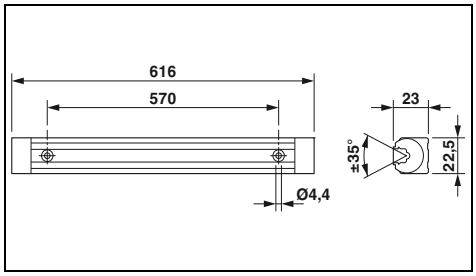

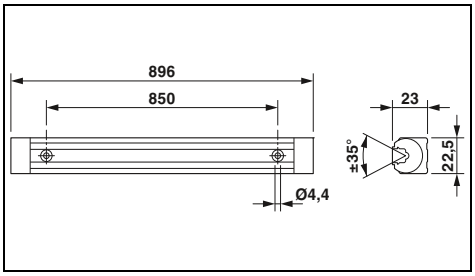

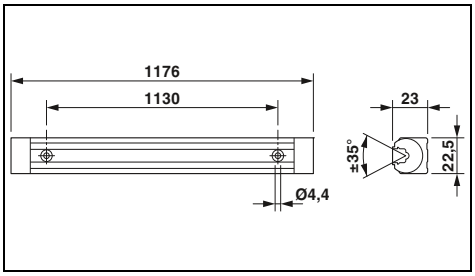

Technical data

24 V DC
22 V DC ... 26 V DC
typ. 0.58 A (at 24 V DC)
approx. 14 W (at 24 V DC)

LED
50,000 h (L70)
24
daylight white
6200 K ±10%
75
max. 691 lx (50 cm distance)
336 lx (distance of 50 cm over 1 m² area)
95 ° (C0-C180)
105 ° (C90-C270)
A+

free cable end
0.7 kg
IP67
any
0°C ... 40°C

Ordering data

Type	Order No.	Pcs./Pkt.
PLD M 160 W-95/105 616	2702477	1

Technical data

24 V DC
22 V DC ... 26 V DC
typ. 0.875 A (at 24 V DC)
approx. 21 W (at 24 V DC)

LED
50,000 h (L70)
36
daylight white
6200 K ±10%
75
max. 833 lx (50 cm distance)
449 lx (distance of 50 cm over 1 m² area)
95 ° (C0-C180)
105 ° (C90-C270)
A+

free cable end
0.8 kg
IP67
any
0°C ... 40°C

Ordering data

Type	Order No.	Pcs./Pkt.
PLD M 160 W-95/105 896	2702478	1

Technical data

24 V DC
22 V DC ... 26 V DC
typ. 1.17 A (at 24 V DC)
approx. 28 W (at 24 V DC)

LED
50,000 h (L70)
48
daylight white
6200 K ±10%
75
max. 908 lx (50 cm distance)
535 lx (distance of 50 cm over 1 m² area)
95 ° (C0-C180)
105 ° (C90-C270)
A+

free cable end
1 kg
IP67
any
0°C ... 40°C

Ordering data

Type	Order No.	Pcs./Pkt.
PLD M 160 W-95/105 1176	2702479	1

Class 200 LED machine lights

These LED lights are designed for use inside machinery.

Your advantages

- Space saving, thanks to the small diameter
- Plug-in supply line enables free choice of the cable length as well as quick and easy installation
- Focused illumination, thanks to swivel action and different emission angles
- IP67 protection and resistance to cooling agents and lubricants enables use in machine tools
- Can be used at high temperatures and can be subjected to strong vibrations and shocks
- Safety glass enables use even in environments with potential mechanical strain
- Particularly economical, thanks to energy-efficient LED technology and an LED service life of at least 60,000 h

Ø 40 mm
Length 190 mm

Ø 40 mm
Length 365 mm

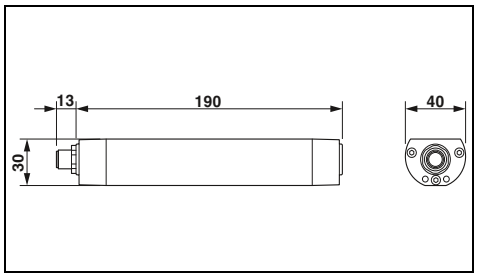

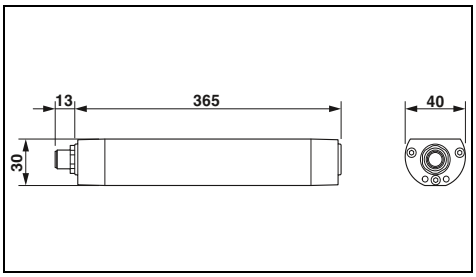

	Technical data		Technical data	
	PLD M...W-85/95...	PLD M...W-40/80...	PLD M...W-85/95...	PLD M...W-40/80...
Power supply for module electronics				
Supply voltage	24 V DC		24 V DC	
Supply voltage range	20 V DC ... 28 V DC		20 V DC ... 28 V DC	
Current consumption	typ. 0.21 A (at 24 V DC)		typ. 0.44 A (at 24 V DC)	
Power consumption	approx. 5 W (at 24 V DC)		approx. 10.5 W (at 24 V DC)	
Light properties				
Source of light type	LED		LED	
Service life, lighting appliance	60000 h (L70)		60000 h (L70)	
Number of LEDs	12		27	
Light color	Neutral white		Neutral white	
Color temperature	5000 K		5000 K	
Color rendering index	80		80	
Illumination	max. 216 lx (distance of 1 m)	max. 393 lx (distance of 1 m)	max. 477 lx (distance of 1 m)	max. 846 lx (distance of 1 m)
Average illumination	156 lx (distance of 1 m over 1 m^2 area)	223 lx (distance of 1 m over 1 m^2 area)	348 lx (distance of 1 m over 1 m^2 area)	487 lx (distance of 1 m over 1 m^2 area)
Emission angle	85 ° (C0-C180) 95 ° (C90-C270)	40 ° (C0-C180) 80 ° (C90-C270)	85 ° (C0-C180) 95 ° (C90-C270)	40 ° (C0-C180) 80 ° (C90-C270)
Energy efficiency class	A+		A+	
General data				
Connection method	M12 connector, (A-coded)		M12 connector, (A-coded)	
Weight	0.3 kg		0.55 kg	
Degree of protection	IP67		IP67	
Note regarding dimensions	Length without M12 flush-type connector		Length without M12 flush-type connector	
Mounting position	any		any	
Ambient temperature (operation)	0°C ... 50°C		0°C ... 50°C	

	Ordering data			Ordering data		
Description	Type	Order No.	Pcs./Pkt.	Type	Order No.	Pcs./Pkt.
LED machine light, emission angle: 85°						
	PLD M 260 W-85/95 190/D40	2702480	1	**PLD M 260 W-85/95 365/D40**	2702481	1
- Can be connected in series	**PLD M 260 W-85/95 190/D40/SC**	2702933	1	**PLD M 260 W-85/95 365/D40/SC**	2702934	1
LED machine light, emission angle: 40°						
	PLD M 260 W-40/80 190/D40	2702938	1	**PLD M 260 W-40/80 365/D40**	2702939	1

	Accessories			Accessories		
Mounting holder	**PLD M-ME MC/D40**	2702492	1	**PLD M-ME MC/D40**	2702492	1
Mounting brackets	**PLD M-ME MB/D40**	2702527	1	**PLD M-ME MB/D40**	2702527	1

Ø 40 mm
Length 540 mm

Ø 40 mm
Length 715 mm

IP67/IPX9 protection

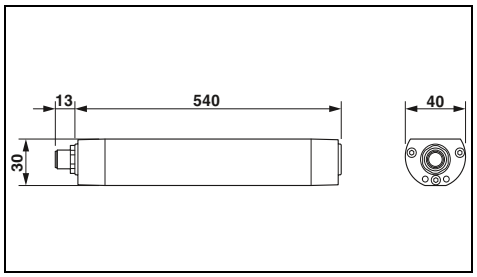

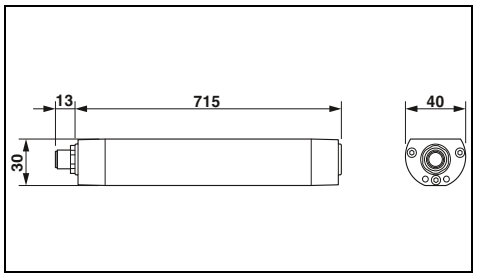

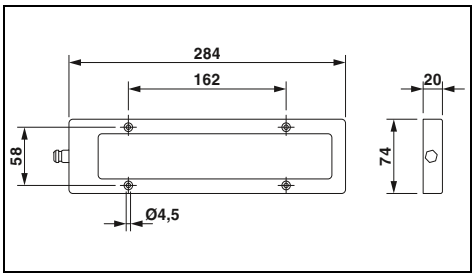

Technical data

	PLD M...W-85/95...	PLD M...W-40/80...
	24 V DC 20 V DC ... 28 V DC typ. 0.67 A (at 24 V DC) approx. 16 W (at 24 V DC)	
	LED 60000 h (L70) 42 Neutral white 5000 K 80 max. 732 lx (distance of 1 m) 541 lx (distance of 1 m over 1 m² area)	max. 1270 lx (distance of 1 m) 746 lx (distance of 1 m over 1 m² area)
	85 ° (C0-C180) 95 ° (C90-C270)	40 ° (C0-C180) 80 ° (C90-C270)
	A+	
	M12 connector, (A-coded) 0.8 kg IP67 Length without M12 flush-type connector any 0°C ... 50°C	

Ordering data

Type	Order No.	Pcs./Pkt.
PLD M 260 W-85/95 540/D40	2702482	1
PLD M 260 W-85/95 540/D40/SC	2702935	1
PLD M 260 W-40/80 540/D40	2702941	1

Accessories

PLD M-ME MC/D40	2702492	1
PLD M-ME MB/D40	2702527	1

Technical data

	PLD M...W-85/95...	PLD M...W-40/80...
	24 V DC 20 V DC ... 28 V DC typ. 0.9 A (at 24 V DC) approx. 21.5 W (at 24 V DC)	
	LED 60000 h (L70) 57 Neutral white 5000 K 80 max. 957 lx (distance of 1 m) 718 lx (distance of 1 m over 1 m² area)	max. 1692 lx (distance of 1 m) 1001 lx (distance of 1 m over 1 m² area)
	85 ° (C0-C180) 95 ° (C90-C270)	40 ° (C0-C180) 80 ° (C90-C270)
	A+	
	M12 connector, (A-coded) 1.1 kg IP67 Length without M12 flush-type connector any 0°C ... 50°C	

Ordering data

Type	Order No.	Pcs./Pkt.
PLD M 260 W-85/95 715/D40	2702483	1
PLD M 260 W-85/95 715/D40/SC	2702936	1
PLD M 260 W-40/80 715/D40	2702942	1

Accessories

PLD M-ME MC/D40	2702492	1
PLD M-ME MB/D40	2702527	1

Technical data

24 V DC 22 V DC ... 26 V DC typ. 0.54 A (at 24 V DC) approx. 13 W (at 24 V DC)
LED 50,000 h (L70) 6 daylight white 6500 K ±10% 65 max. 869 lx (distance of 1 m) 347 lx (distance of 1 m over 1 m² area)
40 °
A+
free cable end 1 kg IP67/IPX9 - any 0°C ... 40°C

Ordering data

Type	Order No.	Pcs./Pkt.
PLD M 280 W-40 284	2702491	1

Accessories

Class 200 LED machine lights

These LED lights are designed for use inside machinery.

Your advantages

- Easy mechanical replacement of traditional tube lights (retrofit), thanks to 70 mm diameter
- Plug-in supply line enables free choice of the cable length as well as quick and easy installation
- Focused illumination, thanks to swivel action
- IP67 protection and resistance to cooling agents and lubricants enables use in machine tools
- Can be used at high temperatures and can be subjected to strong vibrations and shocks
- Safety glass enables use even in environments with potential mechanical strain

Ø 70 mm
Length 370 mm

Ø 70 mm
Length 510 mm

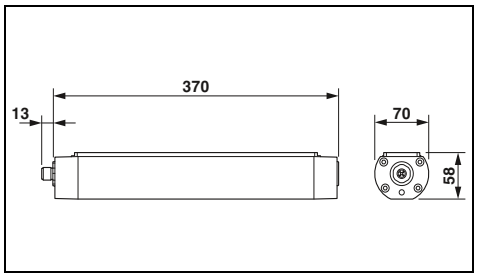

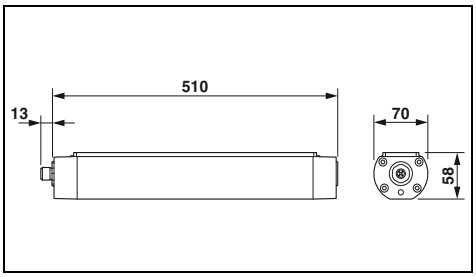

	Technical data	Technical data
Power supply for module electronics		
Supply voltage	24 V DC	24 V DC
Supply voltage range	18 V DC ... 30 V DC	18 V DC ... 30 V DC
Current consumption	typ. 0.5 A (at 24 V DC)	typ. 0.75 A (at 24 V DC)
Power consumption	approx. 12 W (at 24 V DC)	approx. 18 W (at 24 V DC)
Light properties		
Source of light type	LED	LED
Service life, lighting appliance	60000 h (L70)	60000 h (L70)
Number of LEDs	24	36
Light color	Neutral white	Neutral white
Color temperature	5000 K ±8%	5000 K ±8%
Color rendering index	85	85
Illumination	max. 443 lx (distance of 1 m)	max. 662 lx (distance of 1 m)
Average illumination	340 lx (distance of 1 m over 1 m^2 area)	506 lx (distance of 1 m over 1 m^2 area)
Emission angle	75 ° (C0-C180) 95 ° (C90-C270)	75 ° (C0-C180) 95 ° (C90-C270)
Energy efficiency class	A+	A+
General data		
Connection method	M12 connector, (A-coded)	M12 connector, (A-coded)
Weight	1.2 kg	1.7 kg
Degree of protection	IP67	IP67
Note regarding dimensions	Length without M12 flush-type connector	Length without M12 flush-type connector
Mounting position	any	any
Ambient temperature (operation)	0°C ... 45°C	0°C ... 45°C

	Ordering data			Ordering data		
Description	Type	Order No.	Pcs./Pkt.	Type	Order No.	Pcs./Pkt.
LED machine light						
	PLD M 260 W-75/95 370/D70	2702484	1	**PLD M 260 W-75/95 510/D70**	2702485	1
	Accessories			**Accessories**		
Mounting holder	**PLD M-ME MC/D70**	2702493	1	**PLD M-ME MC/D70**	2702493	1
Mounting brackets	**PLD M-ME MB/D70**	2702494	1	**PLD M-ME MB/D70**	2702494	1

Ø 70 mm
Length 650 mm

Ø 70 mm
Length 790 mm

Ø 70 mm
Length 1070 mm

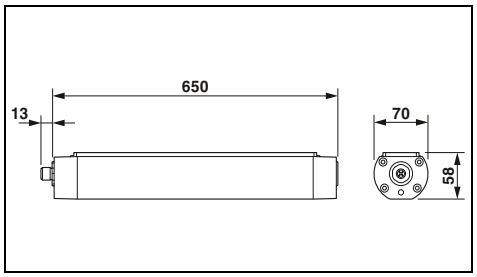

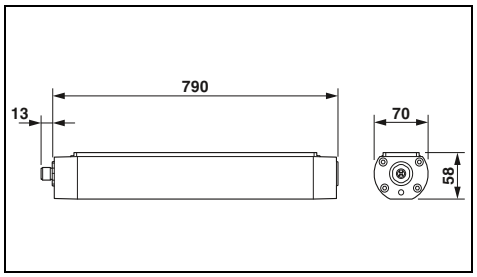

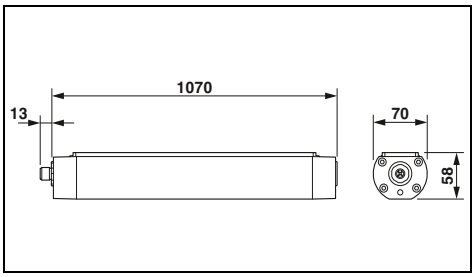

Technical data

24 V DC
18 V DC ... 30 V DC
typ. 1 A (at 24 V DC)
approx. 24 W (at 24 V DC)

LED
60000 h (L70)
48
Neutral white
5000 K ±8%
85
max. 856 lx (distance of 1 m)
657 lx (distance of 1 m over 1 m^2 area)
75 ° (C0-C180)
95 ° (C90-C270)
A+

M12 connector, (A-coded)
2.1 kg
IP67
Length without M12 flush-type connector
any
0°C ... 45°C

Ordering data

Type	Order No.	Pcs./Pkt.
PLD M 260 W-75/95 650/D70	2702486	1

Accessories

PLD M-ME MC/D70	2702493	1
PLD M-ME MB/D70	2702494	1

Technical data

24 V DC
18 V DC ... 30 V DC
typ. 1.25 A (at 24 V DC)
approx. 30 W (at 24 V DC)

LED
60000 h (L70)
60
Neutral white
5000 K ±8%
85
max. 1056 lx (distance of 1 m)
814 lx (distance of 1 m over 1 m^2 area)
75 ° (C0-C180)
95 ° (C90-C270)
A+

M12 connector, (A-coded)
2.6 kg
IP67
Length without M12 flush-type connector
any
0°C ... 45°C

Ordering data

Type	Order No.	Pcs./Pkt.
PLD M 260 W-75/95 790/D70	2702488	1

Accessories

PLD M-ME MC/D70	2702493	1
PLD M-ME MB/D70	2702494	1

Technical data

24 V DC
18 V DC ... 30 V DC
typ. 1.75 A (at 24 V DC)
approx. 42 W (at 24 V DC)

LED
60000 h (L70)
84
Neutral white
5000 K ±8%
85
max. 1391 lx (distance of 1 m)
1089 lx (distance of 1 m over 1 m^2 area)
75 ° (C0-C180)
95 ° (C90-C270)
A+

M12 connector, (A-coded)
3.8 kg
IP67
Length without M12 flush-type connector
any
0°C ... 45°C

Ordering data

Type	Order No.	Pcs./Pkt.
PLD M 260 W-75/95 1070/D70	2702489	1

Accessories

PLD M-ME MC/D70	2702493	1
PLD M-ME MB/D70	2702494	1

LED tower lighting

The LED lights illuminate towers and shafts reliably and efficiently. The light is designed for continuous operation for work spaces or ladders.

Your advantages:
- Time-saving installation, thanks to pre-assembled cabling
- No electrician required, thanks to plug-in connection technology
- Long service life of the lights for maintenance-free lighting

Wide optical distribution

Technical data

Power supply for module electronics	
Supply voltage range	100 V AC ... 250 V AC (50/60 Hz)
Current consumption	typ. 42 mA (for 230 V AC)
Power consumption	approx. 10 W (for 230 V AC)
Light properties	
Source of light type	LED
Service life, lighting appliance	50,000 h (L70)
Number of LEDs	24
Light color	Neutral white
Color temperature	5000 K
Color rendering index	70
Luminous flux	1100 lm (Gross)
General data	
Connection method	QUICKON fast connection
Weight	687 g
Degree of protection	IP67
Width	91.7 mm
Height	76.2 mm
Length	307 mm
Note regarding dimensions	Specfications with connectors
Mounting position	any
Ambient temperature (operation)	-40°C ... 70°C

Ordering data

Description	Type	Order No.	Pcs./Pkt.
LED lighting	**PLD T/1AC/AS/1CON**	2402991	1
LED lighting - Suitable for series connection			

Accessories

Mounting set, with two brackets	**PLD T/1AC/MNT**	2402993	1

Wide optical distribution, suitable for series connection

Technical data

100 V AC ... 250 V AC (50/60 Hz)
typ. 42 mA (for 230 V AC)
approx. 10 W (for 230 V AC)

LED
50,000 h (L70)
24
Neutral white
5000 K
70
1100 lm (Gross)

QUICKON fast connection
802 g
IP67
91.7 mm
76.2 mm
362 mm
Specfications with connectors
any
-40°C ... 70°C

Ordering data

Type	Order No.	Pcs./Pkt.
PLD T/1AC/AS/2CON	2402992	1

Accessories

PLD T/1AC/MNT	2402993	1

Directional light

Technical data

100 V AC ... 250 V AC (50/60 Hz)
typ. 42 mA (for 230 V AC)
approx. 10 W (for 230 V AC)

LED
50,000 h (L70)
6
Neutral white
5000 K
70
1100 lm (Gross)

QUICKON fast connection
702 g
IP67
91.7 mm
76.2 mm
307 mm
Specfications with connectors
any
-40°C ... 70°C

Ordering data

Type	Order No.	Pcs./Pkt.
PLD T/1AC/UD/1CON	2403121	1

Accessories

PLD T/1AC/MNT	2402993	1

Directional light, suitable for series connection

Technical data

100 V AC ... 250 V AC (50/60 Hz)
typ. 42 mA (for 230 V AC)
approx. 10 W (for 230 V AC)

LED
50,000 h (L70)
6
Neutral white
5000 K
70
1100 lm (Gross)

QUICKON fast connection
819 g
IP67
91.7 mm
76.2 mm
362 mm
Specfications with connectors
any
-40°C ... 70°C

Ordering data

Type	Order No.	Pcs./Pkt.
PLD T/1AC/UD/2CON	2403122	1

Accessories

PLD T/1AC/MNT	2402993	1

LED signal lights, Ø 174 mm

new

Light color: white

The signal lights for maritime use can be used for the reliable and energy-efficient operation of light signal systems, such as at locks, movable bridges, and on waterways.

In combination with SafetyBridge Technology from Phoenix Contact, you can transmit and evaluate safety-related signals quickly and easily. Configure your system in accordance with the requirements of the Machinery Directive and satisfy safety functions up to SIL 2/PL d.

Your advantages:

- Safety-related function in accordance with safety standard IEC 61508 (signal light type 200S)
- Quick and easy integration into your network, thanks to standard interfaces
- Robust aluminum housing with IP65 protection for harsh outdoor use
- Reduced costs, thanks to durable and efficient LED technology
- High system availability, thanks to the use of safety-related autonomous monitoring functions

Technical data

	CSD-SL 200S WH	CSD-SL 200 WH
Power supply for module electronics		
Supply voltage	24 V DC (DC)	
Current consumption	max. 590 mA (white LEDs)	max. 450 mA (white LEDs)
Power consumption	typ. 12 W (white LEDs)	typ. 9 W (white LEDs)
Light properties		
Source of light type	LED	
Service life, lighting appliance	50000 h	
Number of LEDs	8 (in acc. with IALA recommendation E200-1 and CIE 1931)	
Light color	IALA white, optimum	
Color temperature	5000 K ±1000K	
Luminous intensity	7300 Cd	
Emission angle	7,5° x 7,5°	
Can be dimmed	Yes, in 256 steps	
General data		
Connection method	M12 connector	
Weight	1400 g	
Degree of protection	IP65/IP67, when installed	
Width	174 mm	
Height	178 mm	
Depth	66 mm	
Ambient temperature (operation)	-25°C ... 55°C	

Ordering data

Description	Type	Order No.	Pcs./Pkt.
LED signal light - With safe diagnostic interface	**CSD-SL 200S WH**	1029564	1
LED signal light - Without diagnostic interface	**CSD-SL 200 WH**	2701781	1

new

Light color: green

new

Light color: red

new

Light color: yellow

Technical data

CSD-SL 200S GN	CSD-SL 200 GN
24 V DC (DC)	
max. 740 mA (green LEDs)	max. 600 mA (green LEDs)
typ. 14 W (green LEDs)	typ. 11 W (green LEDs)
LED	
50000 h	
8 (in acc. with IALA recommendation E200-1 and CIE 1931)	
IALA green, optimum	
490...510 nm	
4200 Cd	
7,5° x 7,5°	
Yes, in 256 steps	
M12 connector	
1400 g	
IP65/IP67, when installed	
174 mm	
178 mm	
66 mm	
-25°C ... 55°C	

Ordering data

Type	Order No.	Pcs./Pkt.
CSD-SL 200S GN	2404768	1
CSD-SL 200 GN	2701782	1

Technical data

CSD-SL 200S RD	CSD-SL 200 RD
24 V DC (DC)	
max. 590 mA (red LEDs)	max. 450 mA (red LEDs)
typ. 12 W (red LEDs)	typ. 9 W (red LEDs)
LED	
50000 h	
8 (in acc. with IALA recommendation E200-1 and CIE 1931)	
IALA red, optimum	
620...645 nm	
3200 Cd	
7,5° x 7,5°	
Yes, in 256 steps	
M12 connector	
1400 g	
IP65/IP67, when installed	
174 mm	
178 mm	
66 mm	
-25°C ... 55°C	

Ordering data

Type	Order No.	Pcs./Pkt.
CSD-SL 200S RD	2404767	1
CSD-SL 200 RD	2701784	1

Technical data

24 V DC (DC)
max. 400 mA (yellow LEDs)
typ. 8 W (yellow LEDs)
LED
50000 h
8 (in acc. with IALA recommendation E200-1 and CIE 1931)
IALA yellow, optimum
588...592 nm
2800 Cd
7,5° x 7,5°
Yes, in 256 steps
M12 connector
1400 g
IP65/IP67, when installed
174 mm
178 mm
66 mm
-25°C ... 55°C

Ordering data

Type	Order No.	Pcs./Pkt.
CSD-SL 200 YE	2701783	1

LED signal lights, Ø 272 mm

The signal lights for maritime use can be used for the reliable and energy-efficient operation of light-signal systems, such as locks.

Status and diagnostic functions provide a detailed database for smart maintenance and ensure the traceability of the system operating behavior.

Your advantages:

- Fast diagnostics and long-term data backup through integration into your network with standard protocols
- Robust aluminum housing with IP65 protection for harsh outdoor use
- Reduced costs, thanks to durable and efficient LED technology

Light color: white

Technical data

	CSD-SL 300 WH	CSD-SL 300 WH 8X8	CSD-SL 300 WH 30X30
Power supply for module electronics			
Supply voltage		24 V DC (DC)	
Current consumption		max. 2.51 A (white LEDs)	
Power consumption		max. 70 W (white LEDs)	
Light properties			
Source of light type		LED	
Service life, lighting appliance		50000 h	
Number of LEDs		30 (in acc. with IALA recommendation E200-1 and CIE 1931)	
Light color		IALA white, optimum	
Color temperature		5000 K ±1000K	
Luminous intensity	35868 Cd	175429 Cd	12706 Cd
Emission angle	8° x 30°	8° x 8°	30° x 30°
Can be dimmed		Yes, in 256 steps	
General data			
Connection method		M17 hybrid connectors with SPEEDCON locking system	
Weight		4200 g	
Degree of protection		IP65/IP67, when installed	
Width		272 mm	
Height		291 mm	
Depth		68 mm	
Ambient temperature (operation)		-25°C ... 55°C	

Ordering data

Description	Type	Order No.	Pcs./Pkt.
LED signal light			
- Emission angle: 8° x 8°	**CSD-SL 300 WH 8X8**	**1002733**	1
- Emission angle: 8° x 30°	**CSD-SL 300 WH**	**2701785**	1
- Emission angle: 30° x 30°	**CSD-SL 300 WH 30X30**	**1051096**	1
LED signal light, emission angle: 8° x 30°			
- Light color: yellow			
- Light color: blue			

Light color: green

Light color: red

Light color: yellow/blue

Technical data

CSD-SL 300 GN	CSD-SL 300 GN 30X30
24 V DC (DC)	
max. 2.73 A (green LEDs)	
max. 75 W (green LEDs)	
LED	
50000 h	
30 (in acc. with IALA recommendation E200-1 and CIE 1931)	
IALA green, optimum	
490...510 nm	
18504 Cd	6800 Cd
8° x 30°	30° x 30°
Yes, in 256 steps	
M17 hybrid connectors with SPEEDCON locking system	
4200 g	
IP65/IP67, when installed	
272 mm	
291 mm	
68 mm	
-25°C ... 55°C	

Ordering data

Type	Order No.	Pcs./Pkt.
CSD-SL 300 GN	2701786	1
CSD-SL 300 GN 30X30	1051088	1

Technical data

CSD-SL 300 RD	CSD-SL 300 RD 30X30
24 V DC (DC)	
max. 1.95 A (red LEDs)	
max. 55 W (red LEDs)	
LED	
50000 h	
30 (in acc. with IALA recommendation E200-1 and CIE 1931)	
IALA red, optimum	
620...645 nm	
15856 Cd	4482 Cd
8° x 30°	30° x 30°
Yes, in 256 steps	
M17 hybrid connectors with SPEEDCON locking system	
4200 g	
IP65/IP67, when installed	
272 mm	
291 mm	
68 mm	
-25°C ... 55°C	

Ordering data

Type	Order No.	Pcs./Pkt.
CSD-SL 300 RD	2701788	1
CSD-SL 300 RD 30X30	1051076	1

Technical data

CSD-SL 300 YE	CSD-SL 300 BU
24 V DC (DC)	
max. 2.51 A (yellow LEDs)	max. 2.43 A (blue LEDs)
max. 70 W (yellow LEDs)	max. 70 W (blue LEDs)
LED	
50000 h	
30 (in acc. with IALA recommendation E200-1 and CIE 1931)	
IALA yellow, optimum	IALA blue, optimum
588...592 nm	467 nm
11394 Cd	6405 Cd
8° x 30°	
Yes, in 256 steps	
M17 hybrid connectors with SPEEDCON locking system	
4200 g	
IP65/IP67, when installed	
272 mm	
291 mm	
68 mm	
-25°C ... 55°C	

Ordering data

Type	Order No.	Pcs./Pkt.
CSD-SL 300 YE	2701787	1
CSD-SL 300 BU	2402723	1

Erecting a tower

A signal tower can be erected or extended without using any tools in a matter of seconds by simply placing the individual signal elements on top of each other and twisting the bayonet locking system.

This automatically establishes an electrical connection between the elements. The control lines are then connected to screw or spring-cage terminal blocks in the connection element (bottom element).

Visual signal elements

The visual elements are available in a choice of five colors with various different signal types.

Audible signal elements

Signaling can also be supported by an audible element.

Mounting elements

The signal tower portfolio is completed by a wide range of mounting elements, which ensure optimum mounting of the signal towers according to the conditions.

Assemble your signal towers individually as follows:

① Select the appropriate mounting type for your application:
surface or tube mounting.

② If applicable, select the mounting bracket or junction box.

③ If applicable, select the foot and the required tube length:
110 mm ... 1000 mm.

④ Select the appropriate connection element for the mounting type:
screw or spring-cage connection.

⑤ Select the required visual signal elements and if applicable, an audible signal element.

Visual signal element – Multicolor

With the multicolor element, up to seven colors can be displayed with just one optical element. You can therefore save costs when it comes to storing and controlling signal towers.

The seven colors (red, yellow, green, blue, white, violet, and turquoise) are selected via a maximum of three control lines.

Features:
- Supply voltage: 24 V DC
- 7 colors can be selected
- The colors red, yellow, and green can be selected via just two control lines
- Minimum LED service life of 50,000 h

LED permanent light element, multicolor

Technical data

PSD electrical data	
Input voltage	24 V DC
Maximum inrush current	max. 500 mA
Current consumption	120 mA
General data	
Material	Polycarbonate PC
Weight	63 g
Height	65.5 mm
Diameter	70 mm
Degree of protection	IP65, when installed or with cover
Ambient temperature (operation)	-20°C ... 50°C
Mounting position	any

Ordering data

Description	Type	Order No.	Pcs./Pkt.
LED permanent light element, multicolor The colors white, red, yellow, green, blue, violet or turquoise can be selected via control signal combination	**PSD-S OE LED MC**	2702090	1

Accessories

End cover, black (replacement part)	**PSD-S AS END COVER**	2700148	1
Label board for towers with tube mounting, complete with assembly material	**PSD-S AS LABEL BOARD**	2700147	1

Visual signal elements

The visual signal elements enable clear visual indication of the machine or system state.

Features:
- 5 signal types to choose from
- Can be freely combined
- High light and color intensity
- Minimum LED service life of 50,000 h
- All elements for 24 V DC
- Random flashing beacon ensures display cannot be ignored

LED permanent light element

LED blinking light element

	Technical data		Technical data	
	...GN / ...CL / ...BU	...RD / ...YE	...GN / ...CL / ...BU	...RD / ...YE
PSD electrical data				
Input voltage	24 V AC/DC		24 V AC/DC	
Maximum inrush current	max. 500 mA		max. 500 mA	
Current consumption	25 mA	max. 40 mA	25 mA	max. 35 mA
General data				
Material	Polycarbonate PC		Polycarbonate PC	
Weight	58 g		59 g	
Height	65.5 mm		65.5 mm	
Diameter	70 mm		70 mm	
Degree of protection	IP65, when installed or with cover		IP65, when installed or with cover	
Ambient temperature (operation)	-30°C ... 50°C		-20°C ... 50°C	
Mounting position	any		any	

	Ordering data			Ordering data		
Description	Type	Order No.	Pcs./Pkt.	Type	Order No.	Pcs./Pkt.
Visual signal elements						
Color: green	**PSD-S OE LED GN**	2700119	1	**PSD-S OE LED BL GN**	2700121	1
Color: white	**PSD-S OE LED CL**	2700127	1	**PSD-S OE LED BL CL**	2700128	1
Color: blue	**PSD-S OE LED BU**	2700131	1	**PSD-S OE LED BL BU**	2700132	1
Color: red	**PSD-S OE LED RD**	2700107	1	**PSD-S OE LED BL RD**	2700114	1
Color: yellow	**PSD-S OE LED YE**	2700122	1	**PSD-S OE LED BL YE**	2700123	1
	Accessories			**Accessories**		
End cover, black (replacement part)	**PSD-S AS END COVER**	2700148	1	**PSD-S AS END COVER**	2700148	1
Label board for towers with tube mounting, complete with assembly material	**PSD-S AS LABEL BOARD**	2700147	1	**PSD-S AS LABEL BOARD**	2700147	1

LED random flashing light element

LED flashing light element

LED rotating light element

Technical data

	...CL / ...BU	...RD / ...YE
	24 V DC	
	max. 500 mA	
	250 mA	350 mA
	Polycarbonate PC	
	78 g	
	65.5 mm	
	70 mm	
	IP65, when installed or with cover	
	-20°C ... 50°C	
	any	

Ordering data

Type	Order No.	Pcs./Pkt.
PSD-S OE LED RFL CL	2700130	1
PSD-S OE LED RFL BU	2700135	1
PSD-S OE LED RFL RD	2700118	1
PSD-S OE LED RFL YE	2700126	1

Accessories

PSD-S AS END COVER	2700148	1
PSD-S AS LABEL BOARD	2700147	1

Technical data

24 V DC	
max. 200 mA	
35 mA	
Polycarbonate PC	
72 g	
65.5 mm	
70 mm	
IP65, when installed or with cover	
-20°C ... 50°C	
any	

Ordering data

Type	Order No.	Pcs./Pkt.
PSD-S OE LED FL CL	2700129	1
PSD-S OE LED FL BU	2700134	1
PSD-S OE LED FL RD	2700115	1
PSD-S OE LED FL YE	2700124	1

Accessories

PSD-S AS END COVER	2700148	1
PSD-S AS LABEL BOARD	2700147	1

Technical data

24 V AC/DC
max. 500 mA
≤ 40 mA
Polycarbonate PC
65 g
65.5 mm
70 mm
IP65, when installed or with cover
-20°C ... 50°C
any

Ordering data

Type	Order No.	Pcs./Pkt.
PSD-S OE LED RL RD	2700116	1
PSD-S OE LED RL YE	2700125	1

Accessories

PSD-S AS END COVER	2700148	1
PSD-S AS LABEL BOARD	2700147	1

Audible signal elements

The audible signal elements enable clear audible indication of the machine or system state.

Features:
- Buzzer and siren elements
- Minimum volume of 80 dB(A)
- Adjustable volume
- Multi-tone siren signaling depending on the situation
- Multilingual signaling, thanks to voice output

Buzzer element, continuous/pulse tone

Siren element, continuous tone and alternating continuous tone

	Technical data	Technical data
PSD electrical data		
Input voltage	24 V AC/DC ±10%	24 V AC/DC ±10%
Nominal input voltage range	21.6 V AC/DC ... 26.4 V AC/DC	21.6 V AC/DC ... 26.4 V AC/DC
Maximum inrush current	max. 200 mA	max. 100 mA
Current consumption	25 mA	40 mA
Signaling		
Type of audible signal	Continuous/pulse tone	Continuous tone Alternating continuous tone
Signal frequency	approx. 1 Hz	-
Tone frequency	approx. 1.75 kHz	approx. 3 kHz
Volume	85 dB(A)	max. 105 dB
General data		
Material	Polycarbonate PC	Polycarbonate PC
Weight	73 g	80 g
Height	72 mm	54 mm
Diameter	70 mm	70 mm
Degree of protection	IP65, when installed	IP65, when installed
Ambient temperature (operation)	-30°C ... 50°C	-30°C ... 50°C
Electromagnetic compatibility	Conformance with EMC Directive 2014/30/EU	Conformance with EMC Directive 2014/30/EU
Mounting position	any	any

Description	Ordering data: Type	Order No.	Pcs./Pkt.	Ordering data: Type	Order No.	Pcs./Pkt.
Buzzer element, continuous/pulse tone	**PSD-S AE BM2-1 85DB**	2700136	1			
Siren element - Continuous tone and alternating continuous tone - Pulse tone, automatic volume control - 8 tones, tone selection via DIP switches - 7 tones, tone selection via 3 signal cables				**PSD-S AE SM2-7 105DB/1**	2702998	1
Voice output element, up to 15 sound sequences, maximum play time of 60 minutes						

Siren element, pulse tone

Siren element, tones can be selected

Voice output element

Technical data

24 V DC ±10% 21.6 V DC ... 26.4 V DC	
max. 500 mA 150 mA	
Pulse tone, automatic volume control	
approx. 1 Hz approx. 2.5 kHz -	
Polycarbonate PC 122 g 110 mm 71.5 mm IP65, when installed -20°C ... 50°C Conformance with EMC Directive 2014/30/EU any	

Ordering data

Type	Order No.	Pcs./Pkt.
PSD-S AE SP1-3 100DB/2	2700137	1

Technical data

	PSD-S AE SM8-6 102DB/1	PSD-S AE SM7-4 100DB/3
	24 V AC/DC ±10% 21.6 V AC/DC ... 26.4 V AC/DC	24 V DC ±10% 21.6 V DC ... 26.4 V DC
	max. 250 mA 30 mA	max. 500 mA 80 mA
	8 tones, adjustable volume	7 tones, remotely controlled
	approx. 20 Hz (trill tone) approx. 2.8 kHz max. 102 dB (continuous and pulse tone at 2.8 kHz)	approx. 1 Hz (pulse tone) approx. 1.6 kHz max. 100 dB(A) (continuous and pulse tone at 3.4 kHz)
	Polycarbonate PC 80 g 54 mm 70 mm IP65, when installed -30°C ... 50°C Conformance with EMC Directive 2014/30/EU any	72 mm -20°C ... 50°C

Ordering data

Type	Order No.	Pcs./Pkt.
PSD-S AE SM8-6 102DB/1	2702997	1
PSD-S AE SM7-4 100DB/3	2700141	1

Technical data

24 V DC ±10% 21.6 V DC ... 26.4 V DC
max. 3 A (for approximately 2 ms) < 50 mA (in standby mode)
Voice, max. 15 texts
- - approx. 88 dB(A)
Polycarbonate PC 184 g 110 mm 71.5 mm IP65, when installed -20°C ... 50°C Conformance with EMC Directive 2014/30/EU any

Ordering data

Type	Order No.	Pcs./Pkt.
PSD-S AE V15/1	2700140	1

Connection elements

The cables for controlling the visual and/or audible elements are connected to the connection element. They can either be mounted directly on a surface or on a tube.

For surface mounting

For tube mounting

	Technical data	Technical data
PSD electrical data		
Nominal input voltage range	12 V AC/DC ... 240 V AC/DC	12 V AC/DC ... 240 V AC/DC
General data		
Material	PA-GF	PA-GF
Weight	83 g	84 g
Height	27 mm	27 mm
Diameter	69 mm	69 mm
Degree of protection	IP65, when installed	IP65, when installed
Ambient temperature (operation)	-30°C ... 50°C	-30°C ... 50°C

	Ordering data			Ordering data		
Description	Type	Order No.	Pcs./Pkt.	Type	Order No.	Pcs./Pkt.
Connection element						
- With screw connection terminal blocks	**PSD-S CE-SM SCREW**	2700093	1	**PSD-S CE-TM SCREW**	2700095	1
- With spring-cage terminal blocks	**PSD-S CE-SM SPRING**	2700091	1	**PSD-S CE-TM SPRING**	2700092	1
	Accessories			**Accessories**		
Cable gland, M16 x 1.5 mm, black	**PSD-S AS CABLE GLAND M16X1,5**	2700145	1			

Mounting elements for base mounting

For base mounting, the mounting foot of the connection element can be mounted on an outlet box or an angled connector as an option.

Your options:

– With visible cable routing
– With concealed cable routing
– Two-sided mounting for up to 10 signal elements

Junction box and bracket

Bracket with concealed cable routing

	Technical data		Technical data	
	PSD-S ME OB	PSD-S ME BR-SM	PSD-S ME BR-SM/1S	PSD-S ME BR-SM/2S
General data				
Material	PA-GF	PA A3 x 2G5	PA A3 x 2G5	PA A3 x 2G5
Weight	73 g	40 g	78 g	71 g
Ambient temperature (operation)	-30°C ... 60°C	-30°C ... 50°C	-30°C ... 60°C	-30°C ... 60°C
Mounting type	Base mounting	Base mounting	Base mounting	Base mounting

	Ordering data			Ordering data		
Description	Type	Order No.	Pcs./Pkt.	Type	Order No.	Pcs./Pkt.
Outlet box with lateral cable entry						
- For base mounting	**PSD-S ME OB**	2700153	1			
Angled connector						
- With visible cable routing	**PSD-S ME BR-SM**	2700144	1			
Angled connector with concealed cable routing						
- For single-sided base mounting				**PSD-S ME BR-SM/1S**	2700160	1
- For two-sided base mounting				**PSD-S ME BR-SM/2S**	2700161	1

Mounting feet and tubes

For tube mounting, the connection element is mounted directly on a tube.

The options are as follows:

– Adapter for single hole mounting
– Foot with integrated tube
– Plastic foot for short tubes
– Metal foot for long tubes
– Foldaway base for vertical alignment with angled surfaces

Adapter and mounting foot with tube

Mounting feet and tubes

Description	Ordering data			Ordering data		
	Type	Order No.	Pcs./Pkt.	Type	Order No.	Pcs./Pkt.
Adapter for single hole mounting	PSD-S ME A-SH M18	2700150	1			
Foot with integrated tube - 110 mm long	PSD-S ME BT 110	2700156	1			
Foot for tube, Ø 25 mm						
- Plastic				PSD-S ME B-P	2700163	1
- Metal				PSD-S ME B-M	2700164	1
Tube, Ø 25 mm						
- 250 mm long				PSD-S ME T-M 250	2700157	1
- 400 mm long				PSD-S ME T-M 400	2700158	1
- 1000 mm long				PSD-S ME T-M 1000	2700154	1
Foldaway base - 7.5° pitch				PSD-S ME FB	2700151	1
Tube, for direct mounting on the foldaway base - 45 mm long				PSD-S ME T-P 45	2700152	1

Mounting elements for tube mounting

For tube mounting, the mounting foot can be mounted on an outlet box or an angled connector as an option.

Your options:

– With visible cable routing
– With concealed cable routing
– Magnetic base for tool-free mounting on metal surfaces

Junction boxes

Brackets

	Technical data		Technical data	
	PSD-S ME OB	PSD-S ME OB/MB	PSD-S ME BR-BM/HCR	PSD-S ME BR-BM
General data				
Material	PA-GF	PA-GF	ABS-PC	PA A3 x 2G5
Weight	73 g	299 g	80 g	60 g
Ambient temperature (operation)	-30°C ... 60°C	-30°C ... 60°C	-30°C ... 60°C	-30°C ... 50°C
Mounting type	Base mounting	Base mounting	Base mounting, concealed cable routing	Base mounting

Description	Ordering data			Ordering data		
	Type	Order No.	Pcs./Pkt.	Type	Order No.	Pcs./Pkt.
Outlet box with lateral cable entry						
- For base mounting	PSD-S ME OB	2700153	1			
- With magnetic base	PSD-S ME OB/MB	2700155	1			
Angled connector						
- With concealed cable routing				PSD-S ME BR-BM/HCR	2700149	1
- With visible cable routing				PSD-S ME BR-BM	2700143	1

The comprehensive solution for the control cabinet

Easy planning, intuitive installation

COMPLETE line is a system comprising technologically leading and coordinated hardware and software products, consulting services, and system solutions that help you optimize your processes in control cabinet manufacturing. Engineering, purchasing, installation, and operation become significantly easier for you.

Your advantages at a glance:

- Intuitive handling, thanks to the uniform design, look, and function
- Time savings across the entire engineering process, thanks to consistent software support
- Reduced logistics costs with standardized accessories and reduced variety of parts
- Optimized processes in control cabinet manufacturing, thanks to custom services and innovative manufacturing solutions

Comprehensive product portfolio

With COMPLETE line, we offer a complete product portfolio of technologically leading products. These include:
– Controllers and I/O modules
– Power supplies and device circuit breakers
– Terminal blocks and distribution blocks
– Relay modules and motor starters
– Signal conditioners
– Safety technology
– Surge protection
– Heavy-duty connectors

Intuitive handling

Thanks to the simple, intuitive handling of the coordinated hardware components you will save time during installation, startup, and maintenance. Push-in connection technology enables you to wire applications quickly – without using tools. The broad, technologically leading product portfolio will always provide you with the right product for standard or special applications.

Time savings across the entire engineering process

The PROJECT complete planning and marking software supports the entire control cabinet manufacturing process. The program features an intuitive user interface and enables the individual planning, automatic checking, and direct ordering of terminal strips.

Reduced logistics costs

Reduced variety of parts, thanks to standardized marking, bridging, and testing accessories. The COMPLETE line system coordinates products, design, and accessories in a way that you benefit from maximum reusability and thus reduce your logistics costs.

Optimized processes in control cabinet manufacturing

From engineering through to manufacturing, COMPLETE line supports you in making your control cabinet production as efficient as possible. Thus creating a customized concept for optimizing your processes in control cabinet manufacturing.
Our terminal strip production helps you to flexibly manage peak order times or to supply your control cabinet production with fully assembled DIN rails just-in-time.

Additional information:

Find our more about COMPLETE line and your comprehensive solutions for the control cabinet. Visit our website:

phoenixcontact.com/completeline

Quality in quantity

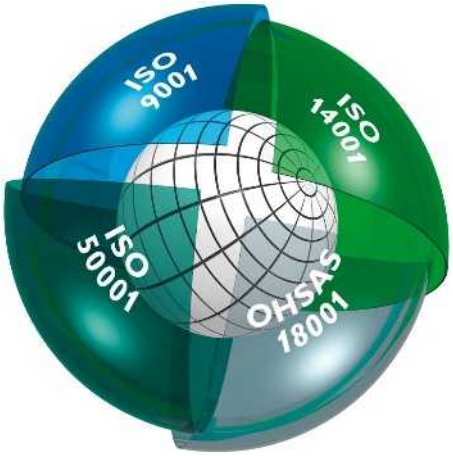

Integrated management system

The objective of the Phoenix Contact integrated management system is to integrate all requirements pertaining to products, processes, and the organization.

Statutory and regulatory requirements, as well as those of international standards and our customers, are met and, in some cases, even exceeded in all phases of the product lifecycle.

The Phoenix Contact management system is monitored by internationally recognized independent bodies each year to ensure that quality, environmental protection, energy efficiency, and occupational safety have been integrated in conformance with the relevant requirements. Certification in accordance with international standards ISO 9001, ISO 14001, ISO 50001, and BS OHSAS 18001 is the result of our corporate philosophy of meeting the needs of our customers, staff, and environment as best as possible. This serves as the basis for innovative products with the familiar high Phoenix Contact quality standard, actively practiced environmental protection through efficient production and products that conserve resources, and responsibility in the field of occupational health and safety. It goes without saying that we integrate all further requirements of standards, international approvals or special customer requirements into our company processes.

The result of this system is a building block for the success of the Phoenix Contact Group as well as its products and services.

CE marking

CE marking was introduced as an important instrument for the free movement of goods and services within the single European market. By applying the mark to a product, the manufacturer confirms its compliance with all EU directives applicable to this product. The EU directives describe the product characteristics with regard to device safety and the avoidance of risks. They have been incorporated in national legislation. Compliance with the requirements is a **condition for placing the product on the market within the EU**.

Where applicable, our products currently fall within the scope of the following directives in particular:

– 2014/35/EU
  Electrical equipment designed for use within certain voltage limits (Low Voltage Directive)
– 2014/30/EU
  Electromagnetic compatibility (EMC Directive)
– 2014/32/EU
  Measuring instruments
– 2006/42/EC
  Safety of machinery (Machinery Directive)
– 2014/34/EU
  Equipment and protective systems intended for use in potentially explosive atmospheres (ATEX Directive)
– 2014/53/EU
  Radio equipment (RED)
– 2011/65/EU
  Restriction of the use of certain hazardous substances (RoHS Directive)
– 2012/19/EU
  Waste electrical and electronic equipment (WEEE Directive)

The standards used as the basis for the aforementioned directives have been at the heart of our development standard for some time as a way of ensuring compliance with European directives. The numbers of the directives indicate their version at the time of publication. In the event of changes to directives and/or standards, our products will undergo conformity assessment again in good time and a new declaration of conformity will be issued promptly. The current declarations for each product can also be found in our download area.

Among the aforementioned European directives, the EMC Directive plays a particularly important role. It uses a directive enshrined in national legislation as the basis for defining electromagnetic compatibility as a fundamental device property. European legislation therefore places great emphasis on the electromagnetic compatibility of devices and systems as a basic prerequisite for the error-free operation of machines and systems. As an international leader in the field of surge protection, Phoenix Contact has extensive expertise in EMC. This expertise and the experience gained over many years in the development and application of industrial interface and communication technology have resulted in an extremely high standard of quality for our products when it comes to electromagnetic compatibility. Our independent laboratory, Phoenix Testlab, was founded in order to share this expertise with other companies. Phoenix Testlab GmbH is an accredited service company, which carries out EMC testing in compliance with European standards.

At Phoenix Testlab, devices are also tested with regard to their electrical safety, mechanical influences, and their behavior in relation to environmental influences. Phoenix Testlab is also a notified body in accordance with EMC Directive 2014/30/EU and Radio Equipment Directive (RED) 2014/53/EU. As a certification body (TCB, FCB, and RCB), Phoenix Testlab is also able to approve these products for the markets in the USA, Canada, and Japan.

Standards and regulations

All relevant standards and regulations are used as the basis for the development and maintenance of our products.

International standards are subject to continuous changes as a result of harmonization and new developments. In line with this process, the current version of all standards that are relevant to our products is documented in the product area on our website at **phoenixcontact.net/products**.

Online product information service on the world wide web

Phoenix Contact is continuously extending its product range.

Within the scope of our product monitoring obligation, all products are subject to an improvement process.

The Internet is an ideal platform to quickly communicate new product developments and improvements to the market.

You can quickly access the relevant Phoenix Contact website for your region via phoenixcontact.com. There you will always find an up-to-date overview of products, solutions, and services from Phoenix Contact. This includes technical documents such as data sheets and user manuals, current driver and demo software, and a direct link to the relevant contact person.

Touch protection

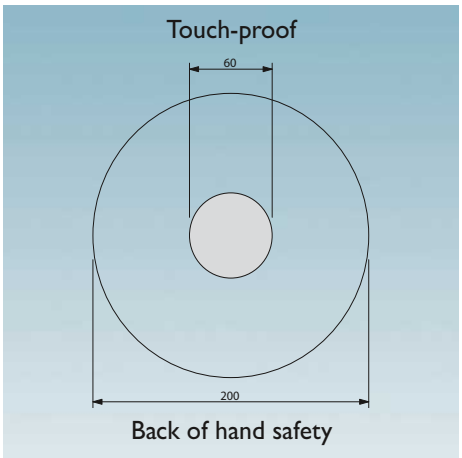

Example: pressure actuation

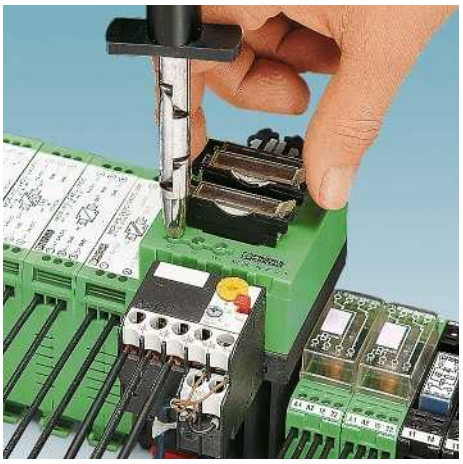

Touch-proof

Back of hand safety

The accident prevention regulations BGV A 2 issued by the German employer's liability insurance association for precision mechanics and electrical engineering apply to the operators of electrical systems and are aimed at the prevention of electrical accidents by means of special safety requirements.

These regulations contain specifications regarding the safety distances for work, operation, and occasional handling in the proximity of "live parts" in low-voltage systems up to 1000 V ~ or 1500 V –.

– Work with live parts is only permitted once they have been de-energized. Operation in the proximity of live parts is only permitted if these parts are de-energized or are protected against direct contact (§ 6). The following safety measures apply when working in the proximity of live parts:
– Provision of the de-energized state for the duration of the work
– Ensure shock protection is in place in the form of covers or barriers during the work
– Assurance that proximity limits will not be violated (§ 7).

The term "occasional handling" has been introduced for the operation of elements such as pushbuttons, rocker arms or rotary buttons in the proximity of live parts.

According to VDE 0105-1, this is covered by "operation with partial protection against direct contact".

Detailed specifications for "occasional handling" can be found in DIN VDE 0106-100. This specifies to what degree live parts in the proximity of operating elements are to be protected against contact. The basis for this is the definition of a "protection area for occasional handling"; this is the area into which the user must reach in order to handle the machine.

The most important thing is that an area formed by an even envelope curve 30 mm in radius must surround the live parts. This area must be **touch-proof**, i.e., the live parts of the electrical device must not be within reach of the VDE test finger in accordance with IEC 60529/DIN VDE 0470-1 (test finger).

Back of hand safety is specified for the "rest of the area" up to 100 mm around the operating element. **Back of hand safety** means that when a force of 50 N is applied to a ball with a diameter of 50 mm, this does not come into contact with the live parts of the equipment. No special measures for ensuring contact safety are stipulated outside this area.

Note: systems and equipment that are operated with PELV up to 25 V ~ or 60 V – are considered to be protected against "direct contact".

According to § 5, Subsection 4 of the BGV A 2 regulations, there is no need to test the condition of the system prior to initial startup if the company has confirmation from the manufacturer or installer that the electrical systems and equipment conform to BGV A 2. The confirmation required relates to systems and equipment that have been installed and are ready for operation and can only be issued by the installer or installation company. The manufacturer of the electrical equipment can only issue a confirmation that products have been produced in accordance with the relevant electrotechnical DIN VDE regulations stipulated in BGV A 2. The installer must bear this in mind when selecting the equipment to be used.

In the field of connection technology, Phoenix Contact offers a wide range of products which are touch-proof or can be protected against contact by means of covers. Depending on the conditions, all of this must be taken into account when selecting the individual types of terminal blocks and accessories.

Quality features of insulating housings

Thermoplastics

The majority of our insulating housing is made from thermoplastic materials. Roughly speaking, these can be divided into amorphous and semi-crystalline substances. Thermoplastics are processed using the efficient and environmentally-friendly injection molding process. They have good recycling properties and can be re-used. We use many materials that are modified in different ways to meet the demanding requirements of electrical and electronic modules, devices, and systems with regard to their mechanical, thermal, and electrical properties.

Behavior of plastics under the influence of temperature (operating temperatures, mechanical influences)

Plastics undergo a process referred to as thermal aging when they are subjected to heat over long periods. This process causes changes in the mechanical and electrical properties of the material. External influences such as radiation and additional mechanical, chemical, and electrical stresses amplify this effect. Special tests on samples can yield characteristic data which provides a good means of drawing comparisons between different plastics. However, applying these characteristics to an evaluation of molded plastic parts is only possible to a limited extent, and can only give the designer a rough guide when it comes to selecting a plastic material. This catalog uses the following assessment criteria: the **RTI value** in accordance with UL746B/ANSI 746 B (elec. based on electric strength) and the **Ti value** in accordance with IEC 60216-1 (based on a 50% reduction in tensile strength after 20,000 hours).

IEC 60947-7-1/EN 60947-7-1 specifies a permissible temperature increase of 45 K for terminal blocks under nominal load. Phoenix Contact terminal blocks satisfy this requirement.

The properties of plastics are not only affected by the influence of heat as described above; they also undergo changes as a result of cold influences. When subjected to cold as well as low levels of humidity, plastics become increasingly brittle with the result that they are no longer capable of withstanding the same mechanical loads. As the table on the right shows, the plastics concerned can be used down to a temperature of -40°C, but only without a mechanical load. As far as the products presented in the catalog are concerned, it is the ambient temperature specified in each case that is to be regarded as definitive for operation. Regardless of the plastics used, this may be subject to further restrictions (e.g., limited to -20°C) as a result of the components used or other restrictive parameters.

At very low temperatures, this means that any form of mechanical load on the plastic components must be avoided (e.g., mounting of products on/removal of products from the DIN rail, actuation of terminal points, locking/ejection of relays from bases, prizing out of plug-in bridges, bending of cables and lines, etc.), as there is always an associated risk of damage. Unless otherwise indicated, it is recommended that you carry out the specified mounting/operational tasks in a temperature range from -10°C to +40°C.

Flammability characteristics of plastics (UL 94)

The flammability tests for plastics have been defined by the Underwriters Laboratory (USA) in regulation UL 94. This applies to all areas of application, particularly in electrical engineering. A horizontal or vertical test is carried out at the test laboratory to determine the flammability of the plastic material with a naked flame. In order of increasing flame-retardant behavior, the evaluation classes are HB, V2, V1, V0, and 5V. Test results are recorded on "yellow cards" and are published annually in the **Recognized Component Directory.**

Thermoplastics: non-reinforced polyamide, PA

We use the modern, semi-crystalline insulation material, polyamide, which is now an essential component in electrical engineering and electronics. It has long occupied a leading position and is authorized for use by the relevant approval authorities such as the CSA, NEMKO, KEMA, PTB, SEV, UL, VDE, etc.

Polyamide has excellent electrical, mechanical, chemical, and other properties even at high operating temperatures. Brief peak temperatures of up to approximately 200°C are permitted as a result of heat aging stabilization. Depending on the type (PA 4.6, 6.6, 6.10, etc.), its melting point is in the region of 215°C to 295°C.

Polyamide absorbs moisture from its surroundings, on average 2.8%. However, this moisture is not crystallization water in the plastic itself, but chemically bonded H_2O groups in the molecular structure. This makes the plastic flexible and resistant to breakage, even at temperatures as low as -40°C. As per UL 94, PA has a flammability rating of V2 to V0.

Thermoplastics: polyester, PBT

We use the semi-crystalline thermoplastic polyester in non-reinforced and fiberglass-reinforced variants for special applications which require increased dimensional and form stability.

In addition to the high operating temperature, the material is characterized by excellent mechanical strength and hardness. Polyester does not absorb moisture from its surroundings. Therefore, PBT is particularly suitable for strips, for example, that are soldered onto PCBs and are subsequently required to pass a burn-in test where they are subjected to the influence of heat. As per UL 94, PBT has a flammability rating of V2 to V0.

Thermoplastics: polycarbonate, PC

Polycarbonate combines many advantages such as rigidity, impact strength, transparency, dimensional stability, good insulation properties, and resistance to heat.

The amorphous material only absorbs moisture to a very limited degree, and is used for items such as large, rigid electronic component housings.

In its transparent form, polycarbonate is particularly suitable for use as a material for cover profiles or marking materials.

PC has good resistance properties against mineral acids, saturated aliphatic hydrocarbons, gasoline, greases, and oils.

This material is not very resistant to solvents, benzene, alkalis, acetone, and ammonia. Strain cracks may result from contact with certain chemicals.

As per UL 94, PC has a flammability rating of V2 to V0.

Thermoplastics: polycarbonate fiber-reinforced, PC-F

Compared to non-reinforced materials, fiber-reinforced polycarbonates feature greater rigidity and impact strength, and have a higher operating temperature. Otherwise, their properties are largely the same as those of non-reinforced polycarbonate.

Thermoplastics: ABS

We use the thermoplastic molding compound ABS for products which must have good impact and notched impact properties in addition to high mechanical stability and rigidity. The products are characterized by their resistance to chemicals and stress cracking due to their special surface quality and hardness.

The characteristic thermal properties provide good dimensional stability at both low and high temperatures. Products made from ABS can be coated with metallic surfaces, e.g., nickel.

As per UL 94, the molding compound used has a flammability rating of HB to V0.

Properties	Unit/level	Polyamide PA	Polyester PBT	Polycarbonate PC	Polycarbonate PC-F	ABS
Operating temperature RTI */**	°C	≤ 105	≤ 105	≤ 125	≤ 120	≤ 80
Minimum temperature (without mechanical load)	°C	-40	-40	-40	-40	-40
Electric strength IEC 60243-1/DIN VDE 0303-21	kV/cm	600	400	> 300		850
Resistance to creepage IEC 60112/DIN VDE 0303-1	CTI...M	550	225	175		200
	CTI...	600	225	175	175	600
Tropical and termite resistance		Good	Good	Good		
Specific contact resistance IEC 60093/VDE 0303 Part 30; IEC 60167/VDE 0303 Part 31	Ω cm	10^{12}	10^{16}	> 10^{16}	> 10^{14}	10^{14}
Surface resistance IEC 60093/VDE 0303 Part 30; IEC 60167/VDE 0303 Part 31	Ω	10^{10}	10^{13}	> 10^{14}		10^{13}
Flammability rating UL 94		V2-V0	V0	V2-V0	V0	HB-V0

* As per UL 746 B/ANSI 746 B (elec.)

** Minimum value

Dimensions

Dimensions: Width/**H**eight/**D**epth

The dimensions "**W**idth/**H**eight/**D**epth" are defined as follows for all DIN-rail-mountable products:

– **W**idth: measurement taken along the DIN rail
– **H**eight: measurement taken across the DIN rail
– **D**epth: measurement taken starting from the mounting plate and including the NS 35/7,5 DIN rail (EN 60715)

The width, height, and depth never change, even if the products shown in this catalog happen to be photographed from two different perspectives (horizontal or vertical).

To make things easier for you, one of the two symbols shown above has been included next to each product photo.

EMC: Class A product

In accordance with statutory regulations, our products are indicated with this footnote if they are intended for use in industrial environments. This means that the permitted limit values for residential applications may be exceeded in the event of conducted and emitted disturbance variables. In such cases, the operator may have to take additional safety measures in order to ensure electromagnetic compatibility in residential applications.

Note

Subject to changes that serve the purpose of technical progress.

Connection cross section

The rated cross section of terminal blocks must be specified by the manufacturer in accordance with IEC 60947-7-1. The rated cross section is the maximum conductor cross section that can be connected in solid, multi-stranded or fine-stranded versions subject to specific thermal, mechanical, and electrical requirements.

The manufacturer must also specify the **rated connection capacity**, i.e., the area of connectable conductors as well as the number of conductors which can be connected simultaneously and the necessary preparation of the conductor ends. The conductors can be **rigid (solid or multi-stranded)** or flexible **(fine-stranded)**.

These values can be found in the product-specific technical data.

The rated connection capacity of Phoenix Contact terminal blocks usually exceeds standard requirements, which specify that it must only be possible to connect one conductor with one of the two next smallest cross sections, excluding the rated cross section (standardized for the cross section range from 0.2 to 35 mm²).

In addition, conductors with a rated cross section can usually be wired with ferrules with plastic sleeve.

Phoenix Contact terminal blocks are designed to allow copper wires to be connected to them untreated. "Special treatment" or the use of ferrules – both permitted in accordance with IEC 60947-7-1 – is not required. If ferrules are nevertheless used to protect flexible conductors against splicing, the connection capacity of the flexible conductor is generally reduced by one level.

Structure and dimensions of connecting cables

Cross section	Solid		Multi-stranded		Fine-stranded		American Wire Gauge [AWG]						
	Diameter max. dimension	Number of wires	Diameter max. dimension	Number of wires (minimum number)	Diameter max. dimension	Number of wires (guide value)	Gauge no.	Rigid wires			Flexible wires		
[mm²]							AWG	[Ø mm]	[circ. mils]	[mm²]	[Ø mm]	[circ. mils]	[mm²]
0.2	0.5	1	–	–	–	–	24	0.51	404	0.21	–	–	–
0.5	0.9	1	1.1	7	1.1	16	20	0.81	1022	0.52	0.97	1111	0.56
0.75	1.0	1	1.2	7	1.3	24	18	1.02	1620	0.82	1.16	1600	0.82
1	1.2	1	1.4	7	1.5	32	(17)	1.15	2050	1.04	–	–	–
–	–	–	–	–	–	–	16	1.29	2580	1.31	1.50	2580	1.32
1.5	1.5	1	1.7	7	1.8	30	(15)	1.45	3260	1.65	–	–	–
–	–	–	–	–	–	–	14	1.63	4110	2.08	1.85	4100	2.09
2.5	1.9	1	2.2	7	2.3	50	(13)	1.83	5180	2.63	–	–	–
–	–	–	–	–	–	–	12	2.05	6530	3.31	2.41	6500	3.32
4	2.4	1	2.7	7	2.9	56	(11)	2.30	8230	4.17	–	–	–
–	–	–	–	–	–	–	10	2.59	10380	5.26	2.95	10530	5.37
6	2.9	1	3.3	7	3.9	84	(9)	2.91	13100	6.63	–	–	–
–	–	–	–	–	–	–	8	3.26	16510	8.37	3.73	16625	8.48

Tightening torque of terminal block screws

IEC 60947-1/EN 60947-1, modified, Table 4 specifies tightening torques for screw connections based on the screw size for electrical and mechanical type tests.

Extract from IEC 60947-1/EN 60947-1, Table 4

The IEC torque and the recommended torque for Phoenix Contact terminal blocks are specified

Thread	Head screw with slot	
	Torque [Nm]	Recommended tightening torque [Nm]
M2.5 (M2.6)	0.4	0.4 - 0.5
M3	0.5	0.5 - 0.6
M3.5	0.8	0.8 - 1.0
M4	1.2	1.2 - 1.5

Current carrying capacity

Standard IEC 60947-7-1/EN 60947-7-1/ DIN VDE 0611-1 specifies the test currents for the individual conductor cross sections listed in the adjacent table. The corresponding currents are listed with the connection data for the individual terminal blocks. The type tests of terminal blocks are based on this data.

Test currents in accordance with IEC 60947-7-1/EN 60947-7-1, Table 5

Rated cross section	**[mm²]**	0.2	0.5	0.75	1.0	1.5	2.5	4	6	10	16
Test current	**[A]**	4	6	9	13.5	17.5	24	32	41	57	76

Certification authorities and marks

Certification authorities and approvals	Country code	Explosion protection	Country code	Marine classification societies	Country code
IECEE CB Scheme (in combination with certifying body)	International	International Electrotechnical Commission	International	DNV GL - MARITIME	DE
CENELEC Certification Agreement (CCA inspection report) (in combination with certifying body)	EU	ATEX Directive	EU	Bureau Veritas	FR
Canadian Standards Association (CSA)	CA	Canadian Standards Association (CSA)	CA	Lloyd's Register of Shipping	GB
Canadian Standards Association (CSA) - CSA approval for the USA -	US	Canadian Standards Association (CSA) - CSA approval for the USA -	US	Nippon Kaiji Kyokai	JP
Canadian Standards Association (CSA) combined logo - CSA approval for Canada and the USA -	CA US	Canadian Standards Association (CSA) combined logo - CSA approval for Canada and the USA -	CA US	Polski Rejestr Statków	PL
Underwriters Laboratories Inc. (UL)	US	Underwriters Laboratories Inc. (UL)	US	Russian Maritime Register of Shipping	RU
Underwriters Laboratories Inc. (UL) - UL approval for Canada -	CA	Underwriters Laboratories Inc. (UL) - UL approval for Canada -	CA	Korean Register of Shipping	KR
Underwriters Laboratories Inc. (UL) combined logo - UL approval for the USA and Canada -	US CA	Underwriters Laboratories Inc. (UL) combined logo - UL approval for the USA and Canada -	US CA	American Bureau of Shipping	US
INSIEME PER LA QUALITA'E LA SICUREZZA	IT	FM Approvals	US	Registro Italiano Navale	IT
Eurasian Conformity	EAEU	FM Approvals - FM approval for Canada -	CA		
DEKRA Certification B.V.	NL	FM Approvals - FM approval for the USA and Canada -	US CA		
Österreichischer Verband für Elektrotechnik	AT	Eurasian Conformity for Ex-products	EAEU		
Eurofins Electrosuisse Product Testing AG SEV certification scheme	CH	Korean Certification Mark for Ex-products	KR		
Verband Deutscher Elektrotechniker e.V. (VDE) – Approval of drawings – Reports with production monitoring	DE	National Institute of Metrology, Standardization and Industrial Quality	BR		
Berufsgenossenschaft (BG) GS – Geprüfte Sicherheit (tested safety)	DE	National Supervision and Inspection Center for Explosion Protection and Safety of Instrumentation	CN		
Intertek ETL Listed - Approval for the USA -	US	Corp. Centro de Investigación y Desarrollo Tecnólogico del Sector Eléctrico	CO		
Intertek ETL Listed - Approval for Canada -	CA				
Intertek ETL Listed - Approval for the USA and Canada -	US CA				
TÜV Rheinland Industrie Service GmbH	DE				
China Compulsory Certification	CN				
Korean Certification Mark	KR				

Type	Order No.	Page
7		
7" DISPLAY PROTECTIVE FOIL	2701374	494
A		
ANT-DIR-2459-01	2701186	389
ANT-DIR-5900-01	2701348	389
ANT-DIR-868-01	2702137	390
ANT-OMNI-2459-02	2701408	388
ANT-OMNI-5900-01	2701347	389
ANT-OMNI-868-01	2702136	390
ANT-OMNI-VAN-868-01	1090616	390
ASI CC ADR	2741338	202
ASI CC ADR CAB CINCH	2741341	202
ASI IO ME DI 4 AB	2741671	202
ASI IO ME DIO 4/3 AB	2741668	202
ASI MA IL UNI	2736628	202
ASI QUINT 100-240/2.4 EFD	2736686	202
ASI QUINT 100-240/4.8 EFD	2736699	202
AX OPC SERVER	2985945	37
AXC 1050	2700988	44
AXC 1050 PN STARTERKIT	2400361	56
AXC 1050 XC	2701295	44
AXC 3050	2700989	45
AXC CLOUD-PRO	2402985	22
AXC F 2152	2404267	10
AXC F 2152 STARTERKIT	1046568	13
AXC F IL ADAPT	1020304	12
AXC F XT ETH 1TX	2403115	13
AXL BS BK	2701422	68
AXL E EC DI16 M12 6M	2701526	168
AXL E EC DI16 M12 6P	2701521	168
AXL E EC DI8 DO4 2A M12 6M	2701529	169
AXL E EC DI8 DO4 2A M12 6P	2701523	169
AXL E EC DI8 DO8 M12 6M	2701525	169
AXL E EC DI8 DO8 M12 6P	2701520	169
AXL E EC DIO16 M12 6M	2701528	168
AXL E EC DIO16 M12 6P	2701522	168
AXL E EC IOL8 DI4 M12 6M	2701531	169
AXL E EC IOL8 DI4 M12 6P	2701524	169
AXL E EIP DI16 M12 6M	2701488	170
AXL E EIP DI16 M12 6P	2701493	170
AXL E EIP DI8 DO4 2A M12 6M	2701490	171
AXL E EIP DI8 DO4 2A M12 6P	2701495	171
AXL E EIP DI8 DO8 M12 6M	2701487	171
AXL E EIP DI8 DO8 M12 6P	2701492	171
AXL E EIP DIO16 M12 6M	2701489	170
AXL E EIP DIO16 M12 6P	2701494	170
AXL E EIP IOL8 DI4 M12 6M	2701491	171
AXL E EIP IOL8 DI4 M12 6P	2701496	171
AXL E ETH DI16 M12 6M	2701538	172
AXL E ETH DI16 M12 6P	2701533	172
AXL E ETH DI8 DO4 2A M12 6M	2701540	173
AXL E ETH DI8 DO4 2A M12 6P	2701535	173
AXL E ETH DI8 DO8 M12 6M	2701537	173
AXL E ETH DI8 DO8 M12 6P	2701532	173
AXL E ETH DIO16 M12 6M	2701539	172
AXL E ETH DIO16 M12 6P	2701534	172
AXL E ETH IOL8 DI4 M12 6M	2701541	173
AXL E ETH IOL8 DI4 M12 6P	2701536	173
AXL E IOL AI1 I M12 R	2700275	182
AXL E IOL AI1 I M12 S	2700338	182
AXL E IOL AI1 U M12 R	2700273	182
AXL E IOL AI1 U M12 S	2700336	182
AXL E IOL AO1 I M12 R	2700282	183
AXL E IOL AO1 I M12 S	2700351	183
AXL E IOL AO1 U M12 R	2700278	183
AXL E IOL AO1 U M12 S	2700350	183
AXL E IOL DI16 M12 6P	2702660	180
AXL E IOL DI8 M12 6P	2702658	180
AXL E IOL DO8 M12 6P	2702659	180
AXL E IOL RTD1 M12 R	2700305	183
AXL E IOL RTD1 M12 S	2700352	183
AXL E IOL SDI8 SDO4 2A M12 6P	2702833	272
AXL E IOL TC4/K M12	2702983	181
AXL E PB DI16 M12 6M	2701505	178
AXL E PB DI16 M12 6P	2701498	178
AXL E PB DI8 DO4 2A M12 6M	2701507	179
AXL E PB DI8 DO4 2A M12 6P	2701502	179
AXL E PB DI8 DO8 M12 6M	2701504	179
AXL E PB DI8 DO8 M12 6P	2701497	179
AXL E PB DIO16 M12 6M	2701506	178
AXL E PB DIO16 M12 6P	2701499	178
AXL E PB IOL8 DI4 M12 6M	2701508	179
AXL E PB IOL8 DI4 M12 6P	2701503	179
AXL E PN DI16 M12 6M	2701516	174
AXL E PN DI16 M12 6P	2701510	174
AXL E PN DI8 DO4 2A M12 6M	2701518	175
AXL E PN DI8 DO4 2A M12 6P	2701512	175
AXL E PN DI8 DO8 M12 6M	2701515	175
AXL E PN DI8 DO8 M12 6P	2701509	175
AXL E PN DIO16 M12 6M	2701517	174
AXL E PN DIO16 M12 6P	2701511	174
AXL E PN IOL8 DI4 M12 6M	2701519	175
AXL E PN IOL8 DI4 M12 6P	2701513	175
AXL E S3 DI16 M12 6M	2701549	176
AXL E S3 DI16 M12 6P	2701544	176
AXL E S3 DI8 DO4 2A M12 6M	2701551	177
AXL E S3 DI8 DO4 2A M12 6P	2701546	177
AXL E S3 DI8 DO8 M12 6M	2701548	177
AXL E S3 DI8 DO8 M12 6P	2701542	177
AXL E S3 DIO16 M12 6M	2701550	176
AXL E S3 DIO16 M12 6P	2701545	176
AXL E S3 IOL8 DI4 M12 6M	2701552	177
AXL E S3 IOL8 DI4 M12 6P	2701547	177
AXL F AI2 AO2 1H	2702072	84
AXL F AI2 AO2 XC 1H	1035429	84
AXL F AI4 I 1H	2688491	82
AXL F AI4 I XC 1H	2702007	82
AXL F AI4 U 1H	2688501	83
AXL F AI4 U XC 1H	2702008	83
AXL F AI8 1F	2688064	83
AXL F AI8 XC 1F	2701232	83
AXL F AO4 1H	2688527	85
AXL F AO4 XC 1H	2702153	85
AXL F AO8 1F	2688080	85
AXL F AO8 XC 1F	2701237	85
AXL F BK EC	2688899	68
AXL F BK EIP	2688394	70
AXL F BK EIP EF	2702782	70
AXL F BK ETH	2688459	71
AXL F BK ETH NET2	2702177	71
AXL F BK ETH XC	2701949	71
AXL F BK PB	2688530	72
AXL F BK PB XC	2702463	72
AXL F BK PN	2701815	69
AXL F BK PN TPS	2403869	69
AXL F BK S3	2701686	69
AXL F BK SAS	2701457	71
AXL F BS F	2688129	74
AXL F BS H	2700992	74
AXL F CNT2 INC2 1F	2688093	92
AXL F CNT2 INC2 XC 1F	2701239	92
AXL F DI16/1 1H	2688310	74
AXL F DI16/1 DO16/1 2H	2702106	81
AXL F DI16/1 DO8/2-2A 2H	2702291	81
AXL F DI16/1 HS 1H	2701722	74
AXL F DI16/4 2F	2688022	75
AXL F DI16/4 XC 2F	2701224	75
AXL F DI32/1 1F	2688035	75
AXL F DI32/1 2H	2702052	75
AXL F DI32/1 XC 1F	2701226	75
AXL F DI64/1 2F	2701450	75
AXL F DI8/1 DO8/1 1H	2701916	80
AXL F DI8/1 DO8/1 XC 1H	2702017	80
AXL F DI8/2 110/220DC 1F	2700684	74
AXL F DI8/2 24DC 1F	2702783	74
AXL F DI8/2 48/60DC 1F	2702654	74
AXL F DI8/3 DO8/3 2H	2702071	81
AXL F DO16 FLK 1H	2701813	76
AXL F DO16/1 1H	2688349	76
AXL F DO16/2 2H	1027904	77
AXL F DO16/3 2F	2688048	77
AXL F DO16/3 XC 2F	2701228	77
AXL F DO32/1 1F	2688051	77
AXL F DO32/1 2H	1004925	77
AXL F DO32/1 XC 1F	2701230	77
AXL F DO4/3 AC 1F	2702068	78
AXL F DO8/2 2A 1H	2688381	76
AXL F DO8/2 2A XC 1H	1035427	76
AXL F DOR4/2 AC/220DC 1F	2700608	79
AXL F IMPULSE2 XC 1H	2702655	94
AXL F IOL8 2H	1027843	89
AXL F LPSDO8/3 1F	2702171	269
AXL F PM EF 1F	2702671	91
AXL F PSDI8/4 1F	2701559	270
AXL F PSDO8/3 1F	2701560	271
AXL F PWM2 1H	1007352	90
AXL F PWR 1H	2688297	73
AXL F RS UNI 1H	2688666	88
AXL F RS UNI XC 1H	2702006	88
AXL F RTD4 1H	2688556	86
AXL F RTD4 XC 1H	1035430	86
AXL F RTD8 1F	2688077	86
AXL F RTD8 S 1F	2702120	87
AXL F RTD8 XC 1F	2701235	86
AXL F SGI2 1H	2702911	95
AXL F SSDI8/4 1F	2702263	270
AXL F SSDO8/3 1F	2702264	271
AXL F SSI1 AO1 1H	2688433	93
AXL F UTH4 1H	2688598	87
AXL F UTH8 1F	2688417	87
AXL F UTH8 XC 1F	2702464	87
AXL P BK PN AF	2316390	98
AXL P BS 35	2316396	99
AXL P BS 45	2316397	98
AXL P FBPS 28DC/0.5A	2316394	99
AXL P FBPS BASE	2316393	99
AXL P TERM PAIR	2316402	98
AXL SHIELD SET	2700518	82
B		
BAR-ANT-N-N-EX	2702198	393
BL FPM 15.6	2402980	485
BL FPM 18.5	2402981	485
BL FPM 21.5	2400515	485
BL RACKMOUNT 2U	2400063	477
BL RACKMOUNT 4U	2400064	477
BL RM 2U REDUNDANT 350W PS	2404379	477
BL2 BPC 1000	2404777	475
BL2 BPC 2000	2404844	475
BL2 BPC 7000	1016240	475
BL2 PPC 1000	2404845	482
BL2 PPC 2000	2404846	482
BL2 PPC 7000	1016236	482
BTP 2043W	1050387	471
BTP 2070W	1046666	471
BTP 2102W	1046667	471
BWP 2043W	1060549	468
BWP 2070W	1060632	468
BWP 2102W	1060630	468
C		
CAB-USB A/ USB C/1,8M	2404677	10
CAB-USB A/MICRO USB B/2,0M	2701626	22
CAB-USB C/ USB C/1,8M	1021809	10
CABLE- 9/8/250/RSM/LENZE	2981826	244
CABLE-15/8/250/RSM/SIMO611D	2981606	244
CABLE-25/8/250/RSM/SIMO611D	2981583	244
CABLE-USB/MINI-USB-3,0M	2986135	402
CF FLASH 256MB	2988780	53
CF FLASH 256MB APPLIC A	2988793	55
CF FLASH 256MB PDPI BASIC	2700549	55
CF FLASH 256MB PDPI PRO	2700550	55
CF FLASH 2GB	2701185	53
CF FLASH 2GB APPLIC A	2701189	55
CLOUD COUPLER-PRO	2402990	23
CLOUD CREDIT-1	2402989	21
CLOUD CREDIT-10	2402986	21
CLOUD CREDIT-2	2402988	21
CLOUD CREDIT-5	2402987	21
CLOUD IOT GATEWAY	1031235	20
CLOUD SDK4J	2404475	21
CLOUD SERVICE/CALC	2403326	23
CLOUD SERVICE/SYSTEMCOUPLER	2404449	23
CLOUD SERVICE/WEATHER	2403325	23
CN-LAMBDA/4-5.9-BB	2838490	392
CN-LAMBDA/4-5.9-SB	2800023	392
CN-UB-70DC-6-BB	2803166	392
CN-UB-70DC-6-SB	2803153	392
COM CAB MINI DIN	2400127	48
CONFIG+	2868059	35
CONFIG+ CPY	2868062	35
CONFIG+ DEMO	2868046	35
COPYSTATION - IFS	2901985	261
CSD-SL 200 GN	2701782	511
CSD-SL 200 RD	2701784	511
CSD-SL 200 WH	2701781	510
CSD-SL 200 YE	2701783	511
CSD-SL 200S GN	2404768	511
CSD-SL 200S RD	2404767	511
CSD-SL 200S WH	1029564	510
CSD-SL 300 BU	2402723	513
CSD-SL 300 GN	2701786	513
CSD-SL 300 GN 30X30	1051088	513
CSD-SL 300 RD	2701788	513
CSD-SL 300 RD 30X30	1051076	513
CSD-SL 300 WH	2701785	512
CSD-SL 300 WH 30X30	1051096	512
CSD-SL 300 WH 8X8	1002733	512
CSD-SL 300 YE	2701787	513
CSMA-LAMBDA/4-2.0-BS-SET	2800491	415
D		
D-FB-PS	2316226	459
D-UFB-PB	2880642	446
DIAG+	2730307	35
DIAG+ CPY	2730404	35
DIAG+ DEMO	2730734	35
DL PPC15M 7000	2400017	484
DL PPC18.5M 7000	2400015	484
DL PPC21.5M 7000	2400016	484
DT-LAN-CAT.6+	2881007	349
DT-TELE-RJ45	2882925	415
DT-TELE-SHDSL	2801593	349
F		
FB-12SP	2316310	456
FB-12SP ISO	2316312	456
FB-2SP/24DC	2316352	455
FB-2SP/E	2316052	455
FB-6SP	2316307	456
FB-8SP ISO	2316311	456
FB-DIAG/FF/LI	2316284	457
FB-DIAG/FF/NC	2316297	457
FB-DP-RPTR	2316373	460
FB-DP-RPTR/SC	2316374	460
FB-ET/E	2316050	454
FB-HSA	2316372	460
FB-HSB-DP-SC	2316382	460
FB-HSB-DP-SC/PA	2316381	460
FB-HSB-DP/PA	2316370	460
FB-HSC	2316371	460
FB-HSP-PLUG/24DC/6A	2316383	460
FB-ISO	2316064	455
FB-M-BD-M20-EX	2901859	453
FB-M-BS-M20-EX	2900209	453

Type	Order No.	Page
FB-M-KV-M20-EX	2900197	453
FB-MODULAR-PP	2316061	454
FB-MUX/HS/AI/PA	1005331	461
FB-MUX/HS/AIOTEMP/PA	1005330	461
FB-MUX/HS/DAIO/PA	1005329	461
FB-MUX/HS/DI24/PA	1005332	461
FB-MUX/HS/DIO-NAM/PA	2316270	461
FB-PA/SC	2316375	460
FB-PS-BASE/EX	2316145	459
FB-PS-MB-25DSUB/EX	2316146	459
FB-PS-MB-I/EX	2316149	459
FB-PS-MB-Y/EX	2316148	459
FB-PS-PLUG-24DC/28DC/0.5/EX	2316132	459
FB1-S1-6SP-S-0-10-00-0-0	2316446	453
FB1-S1-6SP-T-0-10-00-0-0	2316420	453
FB2-S1-12SP-S-0-16-00-0-0	2316433	453
FB2-S1-12SP-T-0-16-00-0-0	2316417	453
FL BT EPA 2	1005869	375
FL CAT5 TERMINAL BOX	2744610	362
FL COMSERVER BASIC 232/422/485	2313478	357
FL COMSERVER UNI 232/422/485	2313452	357
FL DUST CVR BK	2891107	366
FL DUST CVR BN	2891301	366
FL DUST CVR BU	2891204	366
FL DUST CVR GN	2891602	366
FL DUST CVR GY	2891505	366
FL DUST CVR RD	2891709	366
FL DUST CVR VT	2891806	366
FL DUST CVR WH	2891903	366
FL DUST CVR YE	2891408	366
FL EPA 2	1005955	375
FL EPA 2 RSMA	1005957	374
FL EPA RMS	2701133	374
FL EPA WMS	2701134	374
FL FXT	2989307	329
FL IF 2FX SC-D	2832425	330
FL IF 2FX SC-F	2832412	330
FL IF 2FX SM SC-D	2832205	331
FL IF 2FX ST-D	2884033	330
FL IF 2POF SCRJ-D	2891084	331
FL IF 2PSE-F	2832904	330
FL IF 2TX VS-RJ-D	2832357	330
FL IF 2TX VS-RJ-F	2832344	330
FL ISOLATOR 100-M12	2902985	365
FL ISOLATOR 100-RJ/RJ	2313931	365
FL ISOLATOR 100-RJ/SC	2313928	365
FL ISOLATOR 1000-RJ/RJ	2313915	364
FL LCX 50-OHM	2884978	394
FL LCX 50-OHM-RSMA	2702702	394
FL LCX CABLE 24 E	2702553	394
FL LCX CABLE 5 E	2702860	394
FL LCX CLAMP E	2702520	394
FL LCX CON-N-F E	2702518	394
FL LCX PIG-EF142-N-N	2700677	391
FL LCX TOOL E	2702519	394
FL M32 ADAPTER	2702544	373
FL MC 1000 SC	2891320	352
FL MC 1000 ST	2891321	352
FL MC 2000E LC	2891056	353
FL MC 2000E SM40 LC	2891156	353
FL MC 2000T SC	2891315	353
FL MC 2000T SM20 SC	2891317	353
FL MC 2000T SM40 SC	2891318	353
FL MC 2000T ST	2891316	353
FL MC EF 1300 MM SC	2902853	351
FL MC EF 1300 MM ST	2902854	351
FL MC EF 1300 SM SC	2902856	351
FL MC EF 660 SCRJ	2702944	351
FL MC EF WDM-A SC	2902658	350
FL MC EF WDM-B SC	2902659	350
FL MC EF WDM-SET SC	2902660	350
FL MEM PLUG	2891259	331
FL MEM PLUG/MRM	2891275	331
FL MGUARD CENTERPORT	2702547	339
FL MGUARD CORE TX VPN	2702831	341
FL MGUARD DELTA TX/TX	2700967	337
FL MGUARD DELTA TX/TX VPN	2700968	337
FL MGUARD DM UNLIMITED	2981974	342
FL MGUARD GT/GT	2700197	335
FL MGUARD GT/GT VPN	2700198	335
FL MGUARD LIC CIM	2701083	335
FL MGUARD LIC FW RD	2701356	335
FL MGUARD LIC FW/VPN RD	2702193	335
FL MGUARD LIC LIFETIME FW	2700184	334
FL MGUARD LIC OPC INSP	2702191	335
FL MGUARD PCI4000 VPN	2701275	341
FL MGUARD PCIE4000 VPN	2701278	341
FL MGUARD RS2000 TX/TX VPN	2700642	335
FL MGUARD RS2000 TX/TX-B	2702139	334
FL MGUARD RS2005 TX VPN	2701875	336
FL MGUARD RS4000 TX/TX	2700634	335
FL MGUARD RS4000 TX/TX VPN	2200515	335
FL MGUARD RS4000 TX/TX VPN-M	2702465	338
FL MGUARD RS4000 TX/TX-P	2702259	339
FL MGUARD RS4004 TX/DTX	2701876	337
FL MGUARD RS4004 TX/DTX VPN	2701877	337
FL MGUARD SMART2	2700640	340
FL MGUARD SMART2 VPN	2700639	340
FL NAT 2008	2702881	328
FL NAT 2208	2702882	328
FL NAT 2304-2GC-2SFP	2702981	328
FL NETWORK MANAGER BASIC	2702889	342
FL NP PND-4TX IB	2985974	358
FL NP PND-4TX IB-LK	2985929	359
FL NP PND-4TX PB	2985071	359
FL PA SFNT 5-8	2891012	296
FL PATCH CCODE BK	2891194	367
FL PATCH CCODE BN	2891495	367
FL PATCH CCODE BU	2891291	367
FL PATCH CCODE GN	2891796	367
FL PATCH CCODE GY	2891699	367
FL PATCH CCODE RD	2891893	367
FL PATCH CCODE VT	2891990	367
FL PATCH CCODE YE	2891592	367
FL PATCH GUARD	2891424	367
FL PATCH GUARD KEY	2891521	367
FL PATCH SAFE CLIP	2891246	367
FL PD 1001 T GT	2891042	344
FL PLUG GUARD GN	2891615	366
FL PLUG GUARD KEY	2891327	366
FL PLUG GUARD RD	2891712	366
FL PLUG GUARD WH	2891819	366
FL PN/PN SDIO-2TX/2TX	2700651	273
FL PORT GUARD	2891220	366
FL PSE 2TX	2891013	344
FL RED 2001E PRP 2LC	2701864	343
FL RED 2003E PRP	2701863	343
FL RJ45 PROTECT CAP	2832991	367
FL RUGGED BOX	2701204	394
FL RUGGED BOX DIR-1	2701440	394
FL RUGGED BOX OMNI-1	2701430	394
FL RUGGED BOX OMNI-2	2701439	394
FL RUGGED BOX POLE SET	2701205	394
FL SD FLASH/L3/MRM	2700607	329
FL SD FLASH/MRM	2700270	329
FL SFP FE WDM20-A	2702437	333
FL SFP FE WDM20-B	2702438	333
FL SFP FE WDM20-SET	2702439	333
FL SFP FX	2891081	332
FL SFP FX SM	2891082	332
FL SFP GT	2989420	333
FL SFP LH	2989912	333
FL SFP LX	2891767	333
FL SFP LX10-B	1025401	333
FL SFP SX	2891754	332
FL SFP SX2	2702397	332
FL SFP WDM10-A	2702440	333
FL SFP WDM10-B	2702441	333
FL SFP WDM10-SET	2702442	333
FL SNMP OPC SERVER V3	2701139	37
FL SNMP OPC SERVER V3 LIC 100	2701138	37
FL SWITCH 1000T-2POE-GT-2SFP	1026765	302
FL SWITCH 1000T-8POE-GT-2SFP	1026929	303
FL SWITCH 1001T-4POE	2891064	302
FL SWITCH 1001T-4POE-GT	1026937	303
FL SWITCH 1001T-4POE-GT-SFP	1026932	303
FL SWITCH 1008E	2891065	301
FL SWITCH 1605 M12	2700200	300
FL SWITCH 1708 M12 POE	2701883	303
FL SWITCH 1824	2891041	300
FL SWITCH 1924	2891057	300
FL SWITCH 2005	2702323	304
FL SWITCH 2008	2702324	304
FL SWITCH 2016	2702903	305
FL SWITCH 2105	2702665	305
FL SWITCH 2108	2702666	305
FL SWITCH 2116	2702908	305
FL SWITCH 2204-2TC-2SFX	2702334	313
FL SWITCH 2205	2702326	306
FL SWITCH 2206-2FX	2702330	309
FL SWITCH 2206-2FX SM	2702331	309
FL SWITCH 2206-2FX SM ST	2702333	309
FL SWITCH 2206-2FX ST	2702332	309
FL SWITCH 2206-2SFX	2702969	311
FL SWITCH 2206-2SFX PN	1044028	311
FL SWITCH 2207-FX	2702328	308
FL SWITCH 2207-FX SM	2702329	309
FL SWITCH 2208	2702327	306
FL SWITCH 2208 PN	1044024	306
FL SWITCH 2212-2TC-2SFX	2702907	313
FL SWITCH 2214-2FX	2702905	310
FL SWITCH 2214-2FX SM	2702906	310
FL SWITCH 2214-2SFX	1006188	312
FL SWITCH 2214-2SFX PN	1044030	312
FL SWITCH 2216	2702904	307
FL SWITCH 2216 PN	1044029	307
FL SWITCH 2304-2GC-2SFP	2702653	313
FL SWITCH 2306-2SFP	2702970	311
FL SWITCH 2306-2SFP PN	1009222	311
FL SWITCH 2308	2702652	307
FL SWITCH 2308 PN	1009220	307
FL SWITCH 2312-2GC-2SFP	2702910	313
FL SWITCH 2314-2SFP	1006191	313
FL SWITCH 2314-2SFP PN	1031683	313
FL SWITCH 2316	2702909	307
FL SWITCH 2316 PN	1031673	307
FL SWITCH 3004T-FX	2891033	315
FL SWITCH 3004T-FX ST	2891034	315
FL SWITCH 3005	2891030	314
FL SWITCH 3005T	2891032	314
FL SWITCH 3006T-2FX	2891036	315
FL SWITCH 3006T-2FX SM	2891060	315
FL SWITCH 3006T-2FX ST	2891037	315
FL SWITCH 3008	2891031	314
FL SWITCH 3008T	2891035	314
FL SWITCH 3012E-2FX	2891120	317
FL SWITCH 3012E-2FX SM	2891119	317
FL SWITCH 3012E-2SFX	2891067	317
FL SWITCH 3016	2891058	314
FL SWITCH 3016E	2891066	316
FL SWITCH 3016T	2891059	314
FL SWITCH 4000T-4POE-SFP	1026924	319
FL SWITCH 4000T-8POE-2SFP	1026923	319
FL SWITCH 4004T-8POE-4SFP	1026922	319
FL SWITCH 4008T-2GT-4FX SM	2891061	318
FL SWITCH 4008T-2SFP	2891062	318
FL SWITCH 4012T-2GT-2FX	2891063	318
FL SWITCH 4800E-24FX SM-4GC	2891104	321
FL SWITCH 4800E-24FX-4GC	2891102	321
FL SWITCH 4800E-P1	2891075	320
FL SWITCH 4800E-P5	2891076	320
FL SWITCH 4808E-16FX LC-4GC	2891073	321
FL SWITCH 4808E-16FX SM LC-4GC	2891074	321
FL SWITCH 4808E-16FX SM-4GC	2891080	321
FL SWITCH 4808E-16FX-4GC	2891079	321
FL SWITCH 4824E-4GC	2891072	320
FL SWITCH 7004-2TC-2GC-EIP	2702175	327
FL SWITCH 7004-4GC-EIP	2701553	327
FL SWITCH 7005/FX-2FXSM-EIP	2701420	327
FL SWITCH 7006-2GC-EIP	2701554	327
FL SWITCH 7006/2FX-EIP	2701419	327
FL SWITCH 7008-EIP	2701418	326
FL SWITCH GHS 12G/8	2989200	329
FL SWITCH GHS 12G/8-L3	2700787	329
FL SWITCH GHS 4G/12	2700271	329
FL SWITCH GHS 4G/12-L3	2700786	329
FL SWITCH IRT 2TX 2POF	2700691	325
FL SWITCH IRT 4TX	2700689	324
FL SWITCH IRT IP TX/3POF	2700697	325
FL SWITCH IRT TX 3POF	2700692	325
FL SWITCH SF 14TX/2FX	2832593	299
FL SWITCH SF 15TX/FX	2832661	299
FL SWITCH SF 16TX	2832849	298
FL SWITCH SF 4TX/3FX ST	2832603	299
FL SWITCH SF 6TX/2FX	2832933	299
FL SWITCH SF 6TX/2FX ST	2832674	299
FL SWITCH SF 7TX/FX	2832726	299
FL SWITCH SF 7TX/FX ST	2832577	299
FL SWITCH SF 8TX	2832771	298
FL SWITCH SFN 14TX/2FX	2891935	293
FL SWITCH SFN 15TX/FX	2891934	293
FL SWITCH SFN 16TX	2891933	293
FL SWITCH SFN 4TX/FX	2891851	291
FL SWITCH SFN 4TX/FX ST	2891453	291
FL SWITCH SFN 5GT	2891444	294
FL SWITCH SFN 5TX	2891152	291
FL SWITCH SFN 5TX-24VAC	2891021	292
FL SWITCH SFN 5TX-PN	2891151	290
FL SWITCH SFN 6GT/2LX	2891987	295
FL SWITCH SFN 6GT/2LX-20	2891563	295
FL SWITCH SFN 6GT/2SX	2891398	295
FL SWITCH SFN 6TX/2FX	2891314	291
FL SWITCH SFN 6TX/2FX ST	2891411	291
FL SWITCH SFN 6TX/2FX-NF	2891024	291
FL SWITCH SFN 7GT/SX	2891518	295
FL SWITCH SFN 7TX/FX	2891097	291
FL SWITCH SFN 7TX/FX ST	2891110	291
FL SWITCH SFN 7TX/FX-NF	2891023	291
FL SWITCH SFN 8GT	2891673	294
FL SWITCH SFN 8TX	2891929	291
FL SWITCH SFN 8TX-24VAC	2891020	292
FL SWITCH SFN 8TX-NF	2891022	291
FL SWITCH SFN 8TX-PN	2891018	290
FL SWITCH SFNB 4TX/FX	2891027	289
FL SWITCH SFNB 4TX/FX SM20	2891029	289
FL SWITCH SFNB 4TX/FX ST	2891028	289
FL SWITCH SFNB 5TX	2891001	288
FL SWITCH SFNB 8TX	2891002	289
FL SWITCH SFNT 14TX/2FX	2891954	293
FL SWITCH SFNT 16TX	2891952	293
FL SWITCH SFNT 4TX/FX	2891004	297
FL SWITCH SFNT 4TX/FX-C	2891044	297
FL SWITCH SFNT 5GT	2891390	295
FL SWITCH SFNT 5GT-C	2891391	295
FL SWITCH SFNT 5TX	2891003	296
FL SWITCH SFNT 5TX-C	2891043	296
FL SWITCH SFNT 6TX/2FX	2891025	297
FL SWITCH SFNT 6TX/2FX ST	2891026	297
FL SWITCH SFNT 6TX/2FX ST-C	2891049	297
FL SWITCH SFNT 6TX/2FX-C	2891048	297
FL SWITCH SFNT 7TX/FX	2891006	297
FL SWITCH SFNT 7TX/FX ST	2891007	297
FL SWITCH SFNT 7TX/FX ST-C	2891047	297
FL SWITCH SFNT 7TX/FX-C	2891046	297
FL SWITCH SFNT 8TX	2891005	296
FL SWITCH SFNT 8TX-C	2891045	296
FL SWITCH SMCS 14TX/2FX	2700997	323
FL SWITCH SMCS 14TX/2FX-SM	2701466	323
FL SWITCH SMCS 16TX	2700996	323
FL SWITCH SMCS 6GT/2SFP	2891479	323
FL SWITCH SMCS 6TX/2SFP	2989323	323
FL SWITCH SMCS 8GT	2891123	322
FL SWITCH SMCS 8TX	2989226	322
FL SWITCH SMCS 8TX-PN	2989103	322
FL WLAN 1100	2702534	373
FL WLAN 1101	2702538	373
FL WLAN 2100	2702535	373
FL WLAN 2101	2702540	373
FL WLAN 5110	1043193	372
FL WLAN 5111	1043201	372
FL-PP-RJ45-LSA	2901645	363
FL-PP-RJ45-SC	2901643	363
FL-PP-RJ45-SCC	2901642	363
FL-PP-RJ45-SCC/SC041	2903532	363
FL-PP-RJ45-SCC/SC045	2904577	363
FL-PP-RJ45/RJ45	2901646	363
FL-PP-RJ45/RJ45-B	2904933	363
FLM ADAP M12/M8	2736961	196
FLM AI 4 SF M12	2736453	192
FLM AO 4 SF M12	2736466	193

Type	Order No.	Page
FLM BK EIP M12 DI 8 M12-2TX	2773322	189
FLM BK ETH M12 DI 8 M12-2TX	2736916	189
FLM BK IB M12 DI 8 M12	2736301	188
FLM BK PB M12 DI 8 M12-EF	2773377	189
FLM BK PN M12 DI 8 M12-2TX	2736741	188
FLM DI 16 M12	2736835	190
FLM DI 8 M12	2736288	190
FLM DI 8 M8	2773348	194
FLM DIO 4/4 M12-2A	2736369	191
FLM DIO 8/4 M8	2773351	195
FLM DIO 8/8 M12	2736848	191
FLM DO 4 M8-2A	2736932	195
FLM DO 8 M12	2736291	191
FLM DO 8 M8	2736893	195
FLM MP 5	2736660	196
FLM MP 7	2736673	196
FLM TEMP 4 RTD M12	2736819	193
FLX ASI 3.0 DIO 4/4 M12-2A	2773474	202
FLX ASI DI 4 M12	2773429	202
FLX ASI DI 4 M8	2773403	202
FLX ASI DIO 2/2 M12-2A	2773432	202
FLX ASI DIO 4/3 M12-2A	2773445	202
FLX ASI DIO 4/4 M8-1A	2773416	202
FLX ASI DO 4 M12-2A	2773458	202
FLX ASI MA PB SF	2773597	202

G

Type	Order No.	Page
GMVSTBW 2,5 HV/ 4-ST-7,62 NZIL	1893957	160
GW DEVICE SERVER 1E/1DB9	2702758	354
GW DEVICE SERVER 1E/2DB9	2702760	355
GW DEVICE SERVER 2E/2DB9	2702761	355
GW DEVICE SERVER 2E/4DB9	2702763	355
GW EIP/ASCII 1E/1DB9	2702772	354
GW EIP/ASCII 1E/2DB9	2702773	355
GW EIP/ASCII 2E/2DB9	2702774	355
GW EIP/ASCII 2E/4DB9	2702776	355
GW HART USB MODEM	1003824	462
GW MODBUS TCP/ASCII 1E/1DB9	2702768	354
GW MODBUS TCP/ASCII 1E/2DB9	2702769	355
GW MODBUS TCP/ASCII 2E/2DB9	2702770	355
GW MODBUS TCP/ASCII 2E/4DB9	2702771	355
GW MODBUS TCP/RTU 1E/1DB9	2702764	354
GW MODBUS TCP/RTU 1E/2DB9	2702765	355
GW MODBUS TCP/RTU 2E/2DB9	2702766	355
GW MODBUS TCP/RTU 2E/4DB9	2702767	355
GW PL DIO4-BUS	2702237	463
GW PL DP/HART	2316362	462
GW PL DP/MODBUS	2316365	462
GW PL ETH/BASIC-BUS	2702321	463
GW PL ETH/UNI-BUS	2702233	463
GW PL FF/HART	2316360	462
GW PL FF/MODBUS	2316363	462
GW PL HART4-BUS	2702234	463
GW PL HART8+AI-BUS	2702236	463
GW PL HART8-BUS	2702235	463
GW PL PA/HART	2316361	462
GW PL PA/MODBUS	2316364	462
GW PN/ASCII 1E/1DB9	1021080	354
GW PN/ASCII 1E/2DB9	1021058	355
GW PN/ASCII 2E/2DB9	1021056	355
GW PN/ASCII 2E/4DB9	1020882	355

H

Type	Order No.	Page
HMI BATTERY	2701383	494
HMI SCB MOUNTING KIT 6	2701385	469
HMI SCB MOUNTING KIT 8	2701387	469
HTP10 1000	1047318	487
HTP10 1000 CB	1047323	487
HTP10 1000 CC10M	1047373	487
HTP10 1000 CC5M	1047320	487
HTP10 1000 TP	1047361	487
HTP10 1000 WH	1047367	487

I

Type	Order No.	Page
IB IL 120 DI 1-PAC	2861917	126
IB IL 120 PWR IN-PAC	2861454	111
IB IL 230 DI 1-PAC	2861548	127
IB IL 230 PWR IN-PAC	2861535	111
IB IL 230 PWR IN/F-D-PAC	2878971	111
IB IL 24 DI 16-ME	2897156	123
IB IL 24 DI 16-NPN-PAC	2863520	124
IB IL 24 DI 16-PAC	2861250	123
IB IL 24 DI 16-XC-PAC	2701154	123
IB IL 24 DI 2-NPN-PAC	2861483	124
IB IL 24 DI 2-PAC	2861221	122
IB IL 24 DI 32/HD-NPN-PAC	2878243	125
IB IL 24 DI 32/HD-PAC	2862835	123
IB IL 24 DI 4-ME	2863928	122
IB IL 24 DI 4-PAC	2861234	122
IB IL 24 DI 4-XC-PAC	2701152	122
IB IL 24 DI 8-PAC	2861247	123
IB IL 24 DI 8/HD-ECO	2702792	117
IB IL 24 DI 8/T2-PAC	2862204	125
IB IL 24 DI8/HD-PAC	2700173	123
IB IL 24 DI8/HD-XC-PAC	2701212	123
IB IL 24 DO 16-ME	2897253	129
IB IL 24 DO 16-PAC	2861292	129
IB IL 24 DO 16-XC-PAC	2701156	129
IB IL 24 DO 2-2A-PAC	2861263	131
IB IL 24 DO 2-2A-XC-PAC	2702133	131
IB IL 24 DO 2-NPN-PAC	2861496	130
IB IL 24 DO 2-PAC	2861470	128
IB IL 24 DO 32/HD-NPN-PAC	2878340	131
IB IL 24 DO 32/HD-PAC	2862822	129
IB IL 24 DO 4-ME	2863931	128
IB IL 24 DO 4-PAC	2861276	128
IB IL 24 DO 4-XC-PAC	2701155	128
IB IL 24 DO 4/EF-ECO	2702825	117
IB IL 24 DO 8-2A-PAC	2861603	131
IB IL 24 DO 8-PAC	2861289	129
IB IL 24 DO 8/HD-ECO	2702793	117
IB IL 24 DO8/HD-PAC	2700172	129
IB IL 24 DO8/HD-XC-PAC	2701213	129
IB IL 24 FLM MULTI-PAC	2737009	147
IB IL 24 FLM-PAC	2736903	147
IB IL 24 LPSDO 8 V2-PAC	2700606	265
IB IL 24 LPSDO 8 V3-PAC	2701625	265
IB IL 24 LSKIP-PAC	2897457	147
IB IL 24 MUX MA-PAC	2861205	109
IB IL 24 PSDI 16-PAC	2700994	266
IB IL 24 PSDI 8-PAC	2985688	267
IB IL 24 PSDI 8-PLSET/CP/R	2700720	267
IB IL 24 PSDO 4/4-PAC	2916493	267
IB IL 24 PSDO 4/4-PLSET/CP/R	2700721	267
IB IL 24 PSDO 8-PAC	2985631	267
IB IL 24 PSDO 8-PLSET/CP/R	2700722	265
IB IL 24 PSDOR 4-PAC	2985864	268
IB IL 24 PWR IN-PAC	2861331	110
IB IL 24 PWR IN-XC-PAC	2701161	110
IB IL 24 PWR IN/2-F-D-PAC	2862152	111
IB IL 24 PWR IN/2-F-PAC	2862136	111
IB IL 24 PWR IN/2-F-XC-PAC	2701162	111
IB IL 24 PWR IN/2F-DF-PAC	2863779	111
IB IL 24 PWR IN/R-PAC	2861674	112
IB IL 24 PWR IN/R-XC-PAC	2701298	112
IB IL 24 PWR IN/R/L-0.8A-PAC	2693020	113
IB IL 24 SEG-ELF-PAC	2861409	115
IB IL 24 SEG-PAC	2861344	114
IB IL 24 SEG/F-D-PAC	2861904	115
IB IL 24 SEG/F-PAC	2861373	115
IB IL 24 SEG/F-XC-PAC	2701163	115
IB IL 24 TC-PAC	2861360	141
IB IL 24/230 DOR1/W-PAC	2861881	133
IB IL 24/230 DOR1/W-PC-PAC	2862178	133
IB IL 24/230 DOR4/HC-PAC	2897716	133
IB IL 24/230 DOR4/W-PAC	2861878	133
IB IL 24/230 DOR4/W-PC-PAC	2862181	133
IB IL 24/48 DOR 2/W-PAC	2863119	133
IB IL 24/48 DOR 2/W-XC-PAC	2701214	133
IB IL 400 BR	2727394	161
IB IL 400 CN-BRG	2836081	160
IB IL 400 CN-PWR-IN	2836078	160
IB IL 400 ELR 1-3A	2727352	160
IB IL 400 ELR R-3A	2727378	160
IB IL 400 MLR 1-8A	2727365	161
IB IL AI 2-HART-PAC	2862149	137
IB IL AI 2/SF-ME	2863944	134
IB IL AI 2/SF-PAC	2861302	134
IB IL AI 2/SF-XC-PAC	2701157	134
IB IL AI 4/EF-PAC	2878447	136
IB IL AI 4/EF-XC-PAC	2701215	136
IB IL AI 4/I-PAC	2700458	135
IB IL AI 4/I/4-20-ECO	2702495	118
IB IL AI 4/U-PAC	2700459	135
IB IL AI 4/U/0-10-ECO	2702496	118
IB IL AI 8/IS-PAC	2861661	135
IB IL AI 8/SF-PAC	2861412	135
IB IL AI 8/SF-XC-PAC	2701159	135
IB IL AO 1/SF-PAC	2861315	142
IB IL AO 1/SF-XC-PAC	2701219	142
IB IL AO 2/SF-PAC	2863083	142
IB IL AO 2/U/BP-ME	2863957	143
IB IL AO 2/U/BP-PAC	2861467	143
IB IL AO 2/UI-PAC	2700775	143
IB IL AO 4/8/U/BP-PAC	2878036	143
IB IL AO 4/8/U/BP-XC-PAC	2701164	143
IB IL AO 4/I/4-20-ECO	2702497	118
IB IL AO 4/U/0-10-ECO	2702498	118
IB IL AO/CNT-PLSET	2732664	142
IB IL BK-PLSET/CP	2860374	107
IB IL CAN-MA CONF-CAB	2700620	151
IB IL CAN-MA-PAC	2700196	151
IB IL CAN-MA-XC-PAC	2701160	151
IB IL CNT-PAC	2861852	153
IB IL CNT-XC-PAC	2702134	153
IB IL DALI-PAC	2897910	150
IB IL DALI/MM-PAC	2700605	150
IB IL DALI/PWR-PAC	2897813	150
IB IL DI 8/S0-PAC	2897020	125
IB IL DI/DO 8-PLSET	2860950	123
IB IL DI16-PLSET/ICP	2860989	123
IB IL DO 1 AC-PAC	2861920	132
IB IL DO 4 AC-1A-PAC	2861658	132
IB IL DOR LV-SET-PAC	2861645	111
IB IL EC AR 48/10A-PAC	2819587	159
IB IL EX PWR-ISO-PAC	2869909	144
IB IL EX-IS AIO 4/EF-PAC	2869912	145
IB IL EX-IS DIO 4/NAM-PAC	2869911	145
IB IL EX-IS PWR IN-PAC	2869910	144
IB IL EX-IS TEMP 4 RTD/TC-PAC	2869913	145
IB IL FIELD 2	2727501	155
IB IL FIELD 8	2727515	155
IB IL IFS-MA-PAC	2692720	149
IB IL IMPULSE-IN-PAC	2861768	157
IB IL INC-IN-PAC	2861755	156
IB IL MUX-CAB PSI	2878476	109
IB IL PB MA-PAC	2700630	152
IB IL PD 24V-PAC	2862987	115
IB IL PD GND-PAC	2862990	115
IB IL PM 3P/N/EF-PAC	2700965	155
IB IL PWM/2-PAC	2861632	154
IB IL PWR IN/R-PLSET	2860620	112
IB IL RS 232-ECO	2702795	120
IB IL RS 485-ECO	2702141	121
IB IL RS UNI-PAC	2700893	148
IB IL RTD 4/PT100-ECO	2702499	119
IB IL RTD 4/PT1000-ECO	2702501	119
IB IL SAFE 2-ECO	2702446	268
IB IL SCN 6-SHIELD-TWIN	2740245	134
IB IL SCN-12-ICP	2727611	122
IB IL SCN-12-OCP	2727624	128
IB IL SCN-6 SHIELD	2726353	141
IB IL SCN-8	2726337	123
IB IL SCN-8-AC-REL	2740290	133
IB IL SCN-8-CP	2727608	103
IB IL SCN-PWR IN-CP	2727637	102
IB IL SGI 2/F-PAC	2878638	138
IB IL SGI 2/P/EF-PAC	2702373	139
IB IL SSI-IN-PAC	2819574	157
IB IL SSI-PAC	2861865	158
IB IL TEMP 2 RTD-PAC	2861328	141
IB IL TEMP 2 RTD-XC-PAC	2701217	141
IB IL TEMP 2 UTH-PAC	2861386	140
IB IL TEMP 2 UTH-XC-PAC	2701216	140
IB IL TEMP 4/8 RTD-EF-XC-PAC	2701218	141
IB IL TEMP 4/8 RTD-PAC	2863915	141
IB IL TEMP 4/8 RTD/EF-PAC	2897402	141
IB IL TEMP 8 UTH/RTD-PAC	2701000	140
IB IL UTH 4/J-ECO	2702502	119
IB IL UTH 4/K-ECO	2702503	119
IB IL UTH 4/L-ECO	2702504	119
IB ST 24 AI 4/EF	2700838	165
IB ST 24 AO 4/EF	2700839	165
IB ST 24 BAI 8/EF	2700842	165
IB ST 24 DI 16/4	2754338	165
IB ST 24 DI32/2	2754927	165
IB ST 24 DIO 8/8/3-2A	2753708	165
IB ST 24 DO16R/S	2721112	165
IB ST 24 DO32/2	2754325	165
IB ST 24 TEMP 4 RTD	2700843	165
IBS IL 24 BK RB-LK-PAC	2861506	107
IBS IL 24 BK-DSUB-PAC	2861593	107
IBS IL 24 BK-LK/45-PAC	2862165	107
IBS IL 24 BK-T/U-PAC	2861580	107
IBS IL 24 BK-T/U-XC-PAC	2701150	107
IBS IL 24 RB-LK	2878117	147
IBS IL 24 RB-T-PAC	2861441	146
IBS IL 24 RB-T-XC-PAC	2701151	146
IBS PCI SC/I-T	2725260	54
IBS PRG CAB	2806862	53
IBS RL 24 BK RB-LK-LK	2725024	203
IBS RL 24 BK RB-T-T	2731063	203
IBS RL 24 DI 16/8-LK	2724850	203
IBS RL 24 DI 16/8-T	2836463	203
IBS RL 24 DIO 8/8/8-LK	2724847	203
IBS RL 24 DIO 8/8/8-T	2836476	203
IBS RL 24 OC-LK	2819972	203
IBS ST 24 BK DIO 8/8/3-T	2752411	165
IBS ST 24 BK LB-T	2753232	165
IBS ST 24 BK RB-T	2753504	165
IBS ST 24 BK-T	2754341	165
IBS ST 24 BKM-LK-OPC	2728665	165
IBS ST 24 BKM-T	2750154	165
IFS-CONFSTICK	2986122	149
IFS-USB-PROG-ADAPTER	2811271	149
IL BKDIO-PLSET	2878599	103
IL CO BK-PAC	2702230	106
IL CO BK-XC-PAC	2702635	106
IL EC BK-PAC	2702507	102
IL EIP BK DI8 DO4 2TX-PAC	2897758	103
IL EIP BK DI8 DO4 2TX-XC-PAC	2702131	103
IL ETH BK DI8 DO4 2TX-PAC	2703981	103
IL ETH BK DI8 DO4 2TX-XC-PAC	2701388	103
IL MOD BK DI8 DO4-PAC	2878696	108
IL PB BK DI8 DO4/EF-PAC	2692322	109
IL PB BK DI8 DO4/EF-XC-PAC	2702132	109
IL PB BK DP/V1-PAC	2862246	109
IL PN BK DI8 DO4 2SCRJ-PAC	2878379	105
IL PN BK DI8 DO4 2TX-PAC	2703994	105
IL PN BK-PAC	2403696	104
IL S3 BK DI8 DO4 2TX-PAC	2692380	103
ILB BT ADIO MUX	2702875	386
ILB BT ADIO MUX-OMNI	2884208	386
ILB ETH 24 DI16 DIO16-2TX	2832962	164

Type	Order No.	Page
ILB IB 24 DI16 DO16	2862385	164
ILB IB 24 DI16 DO16-DSUB	2878625	164
ILB IB 24 DI32	2862343	164
ILB IB 24 DO16	2862356	164
ILB IB 24 DO32	2862369	164
ILB PB 24 DI 8 DIO8	2863562	164
ILB PB 24 DI16 DO16	2862411	164
ILB PB 24 DI32	2862398	164
ILB PN 24 DI16 DIO16-EF	2702289	164
ILC 130 SBT V2 STARTERKIT	2700993	265
ILC 131 ETH	2700973	48
ILC 131 ETH/XC	2701034	48
ILC 131 STARTERKIT	2701835	57
ILC 151 ETH	2700974	49
ILC 151 ETH/XC	2701141	49
ILC 151 GSM/GPRS	2700977	51
ILC 171 ETH 2TX	2700975	49
ILC 191 ETH 2TX	2700976	49
ILC 191 ME/AN	2700074	50
ILC 2050 BI	2403160	47
IMC 1,5/ 5-ST-3,81SET IL IFS 2M	1784729	149
INJ 1000	2703005	345
INJ 1000-T	2703006	345
INJ 1010	2703007	345
INJ 1010-T	2703008	345
INJ 1100-T	2703009	345
INJ 1110-T	2703010	345
INJ 2101-T	2703011	346
INJ 2102-T	2703012	347
INJ 2103-T	1004065	347
INJ 2111-T	2703013	346
INJ 2112-T	2703014	347
INJ 2113-T	1004066	347
IOL MA8 EIP DI8	1072839	163
IOL MA8 PN DI8	1072838	163
IPC 3.5 1TB HDD	2403835	477
IPC 3.5 2TB HDD	2403836	477
IPC 3.5 4TB HDD	2403837	477
ITC 8113	2403738	486
ITC 8113 CARRYING STRAP	2404751	486
ITC 8113 CHARGING STATION	2403081	486
ITC 8113 HANDLE	2403314	486
ITC 8113 PORTREPLICATOR	2403313	486
ITC 8113 POWER SUPPLY	2403083	486
ITC 8113 PW7	2402961	486
ITC 8113 RECHARGEABLE BATTERY	2403082	486
ITC 8113 SW7	2402957	486
ITC 8113 SWES8	2402959	486
ITC 8113 TRANSPORT CASE	2404752	486

M

Type	Order No.	Page
ME 17,5 TBUS 1,5/ 5-ST-3,81 GN	2709561	349
ME 17,5 TBUS 1,5/PP000-3,81 BK	2890014	431
ME 22,5 TBUS 1,5/ 5-ST-3,81 GN	2707437	357
ME 6,2 TBUS-2 1,5/5-ST-3,81 GN	2869728	252
MINI-SYS-PS-100-240AC/24DC/1.5	2866983	349

N

Type	Order No.	Page
NBC- 1,0-93B/FSD SCO	1407528	198
NBC- 1,0-93E/FSD SCO	1407380	199
NBC- 2,0-93B/FSD SCO	1407529	198
NBC- 2,0-93E/FSD SCO	1407381	199
NBC- 5,0-93B/FSD SCO	1407530	198
NBC- 5,0-93E/FSD SCO	1407382	199
NBC-10,0-93B/FSD SCO	1407531	198
NBC-10,0-93E/FSD SCO	1407383	199
NBC-MSD/ 1,0-93B SCO	1407495	198
NBC-MSD/ 1,0-93B/FSD SCO	1407553	198
NBC-MSD/ 1,0-93B/MSD SCO	1407524	198
NBC-MSD/ 1,0-93E SCO	1407356	199
NBC-MSD/ 1,0-93E/FSD SCO	1407400	199
NBC-MSD/ 1,0-93E/MSD SCO	1407376	199
NBC-MSD/ 2,0-93B SCO	1407496	198
NBC-MSD/ 2,0-93B/FSD SCO	1407554	198
NBC-MSD/ 2,0-93B/MSD SCO	1407525	198
NBC-MSD/ 2,0-93E SCO	1407357	199
NBC-MSD/ 2,0-93E/FSD SCO	1407401	199
NBC-MSD/ 2,0-93E/MSD SCO	1407377	199
NBC-MSD/ 5,0-93B SCO	1407497	198
NBC-MSD/ 5,0-93B/FSD SCO	1407555	198
NBC-MSD/ 5,0-93B/MSD SCO	1407526	198
NBC-MSD/ 5,0-93E SCO	1407358	199
NBC-MSD/ 5,0-93E/FSD SCO	1407402	199
NBC-MSD/ 5,0-93E/MSD SCO	1407378	199
NBC-MSD/10,0-93B SCO	1407498	198
NBC-MSD/10,0-93B/FSD SCO	1407556	198
NBC-MSD/10,0-93B/MSD SCO	1407527	198
NBC-MSD/10,0-93E SCO	1407359	199
NBC-MSD/10,0-93E/FSD SCO	1407403	199
NBC-MSD/10,0-93E/MSD SCO	1407379	199

P

Type	Order No.	Page
PC WORX BASIC LIC	2985275	29
PC WORX BASIC-PRO LIC	2985259	29
PC WORX DEMO	2985725	29
PC WORX EXPRESS	2988670	29
PC WORX PRO LIC	2985385	29
PC WORX RT BASIC	2700291	54
PC WORX SRT	2701680	54
PC WORX TARGET FOR SIMULINK	2400041	30
PC WORX UA SERVER-PLC 10	2402684	36
PC WORX UA SERVER-PLC 40	2402685	36
PC WORX UA SERVER-PLC 80	2402686	36
PLC-V8C/PT-24DC/BM2	2907446	59
PLC-V8C/PT-24DC/EM	2905137	59
PLC-V8C/PT-24DC/SAM2	2907443	58
PLCNEXT ENGINEER	1046008	15
PLD E 400 W 250	2702221	499
PLD E 400 W 375	2702222	499
PLD E 400 W 500	2702223	499
PLD E 400-DS-3,0/FS/0,6	2702336	499
PLD E 400-DS-MS/1,0-FS/0,6	2702337	499
PLD E 400-ME CM	2702314	499
PLD E 400-ME MM	2702312	499
PLD E 400-ME SM	2702313	499
PLD E 400-PS/1AC/24DC/12W	2702435	499
PLD E 400-PS/1AC/24DC/30W	2702436	499
PLD E 608 W 265	2702224	500
PLD E 608 W 315/B	2702227	501
PLD E 608 W 315/E	2702228	501
PLD E 608 W 315/F	2702226	501
PLD E 608-CA-3,0/FS AM	2702302	500
PLD E 608-CA-3,0/FS/UL	2702306	500
PLD E 608-CA-MS/0,6/FS AM	2702303	500
PLD E 608-CA-MS/0,6/FS/UL	2702307	500
PLD E 608-CA-MS/1,0/FS AM	2702304	500
PLD E 608-CA-MS/4,0/FS AM	2702305	500
PLD E 608-CO-FS	2702309	500
PLD E 608-CO-MS	2702308	500
PLD E 608-CO-MS/FS/FR	2702310	500
PLD E 608-ME MM	2702315	500
PLD E 608-ME SFM	2702317	500
PLD E 608-ME SM	2702316	500
PLD M 160 W-95/105 1176	2702479	503
PLD M 160 W-95/105 196	2702475	502
PLD M 160 W-95/105 336	2702476	502
PLD M 160 W-95/105 616	2702477	503
PLD M 160 W-95/105 896	2702478	503
PLD M 260 W-40/80 190/D40	2702938	504
PLD M 260 W-40/80 365/D40	2702939	504
PLD M 260 W-40/80 540/D40	2702941	505
PLD M 260 W-40/80 715/D40	2702942	505
PLD M 260 W-75/95 1070/D70	2702489	507
PLD M 260 W-75/95 370/D70	2702484	506
PLD M 260 W-75/95 510/D70	2702485	506
PLD M 260 W-75/95 650/D70	2702486	507
PLD M 260 W-75/95 790/D70	2702488	507
PLD M 260 W-85/95 190/D40	2702480	504
PLD M 260 W-85/95 190/D40/SC	2702933	504
PLD M 260 W-85/95 365/D40	2702481	504
PLD M 260 W-85/95 365/D40/SC	2702934	504
PLD M 260 W-85/95 540/D40	2702482	505
PLD M 260 W-85/95 540/D40/SC	2702935	505
PLD M 260 W-85/95 715/D40	2702483	505
PLD M 260 W-85/95 715/D40/SC	2702936	505
PLD M 280 W-40 284	2702491	505
PLD M-ME MB/D40	2702527	504
PLD M-ME MB/D70	2702494	506
PLD M-ME MC/D40	2702492	504
PLD M-ME MC/D70	2702493	506
PLD T/1AC/AS/1CON	2402991	508
PLD T/1AC/AS/2CON	2402992	509
PLD T/1AC/MNT	2402993	508
PLD T/1AC/UD/1CON	2403121	509
PLD T/1AC/UD/2CON	2403122	509
PP-RJ-IDC	2703019	361
PP-RJ-IDC-F	2703023	361
PP-RJ-RJ	2703015	360
PP-RJ-RJ-F	2703020	360
PP-RJ-SC	2703016	361
PP-RJ-SC-F	2703021	361
PP-RJ-SCC	2703018	361
PP-RJ-SCC-F	2703022	361
PROT-M12	1680539	197
PROT-M12 FS	1560251	197
PROT-M8	1682540	197
PROT-MS SCO	1553129	197
PSD-S AE BM2-1 85DB	2700136	518
PSD-S AE SM2-7 105DB/1	2702998	518
PSD-S AE SM7-4 100DB/3	2700141	519
PSD-S AE SM8-6 102DB/1	2702997	519
PSD-S AE SP1-3 100DB/2	2700137	519
PSD-S AE V15/1	2700140	519
PSD-S AS CABLE GLAND M16X1,5	2700145	520
PSD-S AS END COVER	2700148	515
PSD-S AS LABEL BOARD	2700147	515
PSD-S CE-SM SCREW	2700093	520
PSD-S CE-SM SPRING	2700091	520
PSD-S CE-TM SCREW	2700095	520
PSD-S CE-TM SPRING	2700092	520
PSD-S ME A-SH M18	2700150	521
PSD-S ME B-M	2700164	521
PSD-S ME B-P	2700163	521
PSD-S ME BR-BM	2700143	521
PSD-S ME BR-BM/HCR	2700149	521
PSD-S ME BR-SM	2700144	520
PSD-S ME BR-SM/1S	2700160	520
PSD-S ME BR-SM/2S	2700161	520
PSD-S ME BT 110	2700156	521
PSD-S ME FB	2700151	521
PSD-S ME OB	2700153	520
PSD-S ME OB/MB	2700155	521
PSD-S ME T-M 1000	2700154	521
PSD-S ME T-M 250	2700157	521
PSD-S ME T-M 400	2700158	521
PSD-S ME T-P 45	2700152	521
PSD-S OE LED BL BU	2700132	516
PSD-S OE LED BL CL	2700128	516
PSD-S OE LED BL GN	2700121	516
PSD-S OE LED BL RD	2700114	516
PSD-S OE LED BL YE	2700123	516
PSD-S OE LED BU	2700131	516
PSD-S OE LED CL	2700127	516
PSD-S OE LED FL BU	2700134	517
PSD-S OE LED FL CL	2700129	517
PSD-S OE LED FL RD	2700115	517
PSD-S OE LED FL YE	2700124	517
PSD-S OE LED GN	2700119	516
PSD-S OE LED MC	2702090	515
PSD-S OE LED RD	2700107	516
PSD-S OE LED RFL BU	2700135	517
PSD-S OE LED RFL CL	2700130	517
PSD-S OE LED RFL RD	2700118	517
PSD-S OE LED RFL YE	2700126	517
PSD-S OE LED RL RD	2700116	517
PSD-S OE LED RL YE	2700125	517
PSD-S OE LED YE	2700122	516
PSI-CAB-GSM/UMTS- 5M	2900980	402
PSI-CAB-GSM/UMTS-10M	2900981	402
PSI-DATA/BASIC-MODEM/RS232	2313067	411
PSI-GPRS/GSM-MODEM/RS232-QB	2313106	414
PSI-GSM-STUB-ANT	2313342	402
PSI-GSM/UMTS-QB-ANT	2313371	415
PSI-MODEM-SHDSL/PB	2313656	429
PSI-MODEM-SHDSL/SERIAL	2313669	429
PSI-MOS-DNET CAN/FO 660/BM	2708054	433
PSI-MOS-DNET CAN/FO 660/EM	2708067	433
PSI-MOS-DNET CAN/FO 850/BM	2708083	433
PSI-MOS-DNET CAN/FO 850/EM	2708096	433
PSI-MOS-DNET/FO 850 E	2313999	433
PSI-MOS-DNET/FO 850 T	2313986	433
PSI-MOS-PROFIB/FO 660 E	2708290	431
PSI-MOS-PROFIB/FO 660 T	2708287	431
PSI-MOS-PROFIB/FO 850 E	2708274	431
PSI-MOS-PROFIB/FO 850 T	2708261	431
PSI-MOS-PROFIB/FO1300 E	2708559	431
PSI-MOS-PROFIB/FO1300 T	2708892	431
PSI-MOS-RS232/FO 660 E	2708368	439
PSI-MOS-RS232/FO 660 T	2708410	439
PSI-MOS-RS232/FO 850 E	2708371	439
PSI-MOS-RS232/FO 850 T	2708423	439
PSI-MOS-RS232/FO1300 E	2708588	439
PSI-MOS-RS422/FO 660 E	2708342	437
PSI-MOS-RS422/FO 660 T	2708384	437
PSI-MOS-RS422/FO 850 E	2708355	437
PSI-MOS-RS422/FO 850 T	2708397	437
PSI-MOS-RS422/FO1300 E	2708575	437
PSI-MOS-RS485W2/FO 660 E	2708313	435
PSI-MOS-RS485W2/FO 660 T	2708300	435
PSI-MOS-RS485W2/FO 850 E	2708339	435
PSI-MOS-RS485W2/FO 850 T	2708326	435
PSI-MOS-RS485W2/FO1300 E	2708562	435
PSI-REP-DNET CAN	2313423	423
PSI-REP-PROFIBUS/12MB	2708863	422
PSI-REP-RS485W2	2313096	423
PSI-TERMINATOR-PB-TBUS	2702636	424
PSM PTK	2760623	443
PSM PTK-4	2799364	443
PSM-AD-D9-NULLMODEM	2708753	53
PSM-CABLE-PROFIB/FC	2744652	442
PSM-EG-RS232/RS422-P/4K	2761266	425
PSM-ME-RS232/RS232-P	2744461	426
PSM-ME-RS232/RS485-P	2744416	425
PSM-ME-RS232/TTY-P	2744458	427
PSM-ME-RS485/RS485-P	2744429	423
PSM-STRIP-FC/PROFIB	2744623	442
PSM-STRIP-KNIFEBLOCK	2744636	442
PSR-CONF-WIN1.0	2981554	279
PSR-CT-C-ACT	2702973	213
PSR-CT-C-SEN-1-8	2702972	213
PSR-CT-F-SEN-1-8	2702976	213
PSR-CT-M-SEN-1-8	2702975	213
PSR-FTB/1.5/11.5	2904476	263
PSR-FTB/20/86	2904477	263
PSR-MC20-3NO-1DO-24DC-SC	2700466	220
PSR-MC20-3NO-1DO-24DC-SP	2700467	220
PSR-MC30-2NO-1DO-24DC-SC	2700498	221
PSR-MC30-2NO-1DO-24DC-SP	2700499	221
PSR-MC32-3NO-1NC-24-230UC-SC	2700524	221
PSR-MC32-3NO-1NC-24-230UC-SP	2700525	221
PSR-MC34-3NO-1DO-24DC-SC	2700540	222
PSR-MC34-3NO-1DO-24DC-SP	2700548	222
PSR-MC37-3NO-1NC-24DC-SC	2702411	222
PSR-MC37-3NO-1NC-24DC-SP	2702412	222
PSR-MC38-2NO-1DO-24DC-PI	1009832	223
PSR-MC38-2NO-1DO-24DC-SC	1009831	223
PSR-MC40-3NO-1DO-24DC-SC	2700569	223
PSR-MC40-3NO-1DO-24DC-SP	2700570	223
PSR-MC42-2NO-1DO-24DC-SC	2702901	224
PSR-MC42-2NO-1DO-24DC-SP	2702902	224
PSR-MC50-3NO-1DO-24DC-SC	2700553	224
PSR-MC50-3NO-1DO-24DC-SP	2700564	224
PSR-MC60-2NO-1DO-24DC-SC	2700571	225
PSR-MC60-2NO-1DO-24DC-SP	2700572	225
PSR-MC62-2NO-1DO-24DC-SC	2700574	225
PSR-MC62-2NO-1DO-24DC-SP	2700575	225
PSR-MC70-2NO-1DO-24DC-SC	2702094	226
PSR-MC70-2NO-1DO-24DC-SP	2702095	226

Type	Order No.	Page
PSR-MC72-2NO-1DO-24DC-SC	2702096	226
PSR-MC72-2NO-1DO-24DC-SP	2702097	226
PSR-MC73-5NO-1DO-24DC-SC	1015533	227
PSR-MC73-5NO-1DO-24DC-SP	1015526	227
PSR-MC82-5NO-1NC-1DO-24DC-SC	2702382	228
PSR-MC82-5NO-1NC-1DO-24DC-SP	2702383	228
PSR-MM25-1NO-2DO-24DC-SC	2702355	243
PSR-MM25-1NO-2DO-24DC-SP	2702356	243
PSR-MM30-2NO-2DO-24DC-SC	2702357	243
PSR-MM30-2NO-2DO-24DC-SP	2702358	243
PSR-MS20-1NO-1DO-24DC-SC	2904950	215
PSR-MS21-1NO-1DO-24DC-SC	2702192	219
PSR-MS25-1NO-1DO-24DC-SC	2904951	215
PSR-MS30-1NO-24DC-SC	2904952	216
PSR-MS35-1NO-24DC-SC	2904953	216
PSR-MS40-1NO-1DO-24DC-SC	2904954	217
PSR-MS45-1NO-1DO-24DC-SC	2904955	217
PSR-MS50-1NO-1DO-24DC-SC	2904956	218
PSR-MS55-1NO-1DO-24DC-SC	2904957	218
PSR-MS60-2NO-24DC-SC	2904958	219
PSR-PC20-1NO-1NC-24DC-SC	2700577	252
PSR-PC20-1NO-1NC-24DC-SP	2700578	252
PSR-PC32-2NO-1NC-24-230UC-SC	2700581	252
PSR-PC32-2NO-1NC-24-230UC-SP	2700582	252
PSR-PC40-2NO-1DO-24DC-SC	2700588	251
PSR-PC40-2NO-1DO-24DC-SP	2700589	251
PSR-PC50-1NO-1DO-24DC-SC	2904664	253
PSR-PC50-1NO-1DO-24DC-SP	2904665	253
PSR-PC51-1NO-1NC-24DC-SC	2702522	253
PSR-PC51-1NO-1NC-24DC-SP	2702523	253
PSR-PC52-1NO-1NC-24DC-SC	1017062	253
PSR-PC52-1NO-1NC-24DC-SP	1017064	253
PSR-PIP-24DC/MXF1/4X1/2X2/B	2903253	235
PSR-PIP-24DC/MXF2/4X1/2X2/B	2903256	235
PSR-PIP-24DC/MXF3/4X1/2X2/B	2903259	235
PSR-PIP-24DC/MXF4/4X1/2X2/B	2903262	235
PSR-PS20-1NO-1NC-24DC-SC	2700356	249
PSR-PS21-1NO-1NC-24DC-SC	2700357	249
PSR-PS22-1NO-1NC-24VDC-SC	2702524	250
PSR-PS23-1NO-1NC-24VDC-SC	2702663	250
PSR-PS40-1NO-1DO-24DC-SC	2700398	251
PSR-SACB-4/4-L- 5,0PUR-SD	2981871	233
PSR-SACB-4/4-L-10,0PUR-SD	2981884	233
PSR-SCF- 24UC/URM/2X21	2981363	247
PSR-SCF- 24UC/URM/4X1/2X2	2981444	247
PSR-SCF-120UC/URM/2X21	2981376	247
PSR-SCP- 24DC/ESD/4X1/30	2981800	230
PSR-SCP- 24DC/ESD/5X1/1X2/ T 1	2981143	230
PSR-SCP- 24DC/ESD/5X1/1X2/ T 3	2981224	230
PSR-SCP- 24DC/ESD/5X1/1X2/ T 5	2981266	230
PSR-SCP- 24DC/ESD/5X1/1X2/0T 5	2981101	230
PSR-SCP- 24DC/ESP4/2X1/1X2	2981020	256
PSR-SCP- 24DC/FSP/1X1/1X2	2981978	254
PSR-SCP- 24DC/FSP/2X1/1X2	2986960	255
PSR-SCP- 24DC/FSP2/2X1/1X2	2986575	255
PSR-SCP- 24DC/MXF1/4X1/2X2/B	2902725	234
PSR-SCP- 24DC/RSM4/4X1	2981538	244
PSR-SCP- 24DC/SDC4/2X1/B	2981486	231
PSR-SCP- 24DC/SIM4	2981936	233
PSR-SCP- 24DC/TS/M	2986012	261
PSR-SCP- 24DC/TS/S	2986229	261
PSR-SCP- 24DC/TS/SDI8/SDIO4	2986038	262
PSR-SCP- 24DC/TS/SDOR4/4X1	2986096	262
PSR-SCP- 24DC/URD3/4X1/2X2	2981512	233
PSR-SCP- 24DC/URD3/4X1/2X2/3	2981732	233
PSR-SCP- 24DC/URM4/4X1/2X2/B	2981677	233
PSR-SCP- 24UC/ESA2/4X1/1X2/B	2963802	229
PSR-SCP- 24UC/ESAM4/2X1/1X2	2900525	229
PSR-SCP- 24UC/ESAM4/3X1/1X2/B	2900509	229
PSR-SCP- 24UC/ESAM4/8X1/1X2	2963912	229
PSR-SCP- 24UC/ESL4/3X1/1X2/B	2981059	231
PSR-SCP- 24UC/THC4/2X1/1X2	2963721	231
PSR-SCP- 24UC/URM/3X1/3X2	2981839	246
PSR-SCP- 24UC/URM/5X1/1X2	2981952	246
PSR-SCP- 24UC/URM/5X1/2X2	2963747	245
PSR-SCP- 24UC/URM4/5X1/2X2	2963734	232
PSR-SCP- 24UC/URM4/5X1/2X2/B	2981033	232
PSR-SCP-120UC/ESAM4/3X1/1X2/B	2901422	229
PSR-SCP-120UC/URM/5X1/2X2	2981402	245
PSR-SCP-230AC/ESAM2/3X1/1X2/B	2901430	229
PSR-SCP-230UC/ESAM4/3X1/1X2/B	2901428	229
PSR-SCP-24DC/ESD/5X1/1X2/300	2981428	230
PSR-SCP-24DC/MXF2/4X1/2X2/B	2903254	234
PSR-SCP-24DC/MXF3/4X1/2X2/B	2903257	234
PSR-SCP-24DC/MXF4/4X1/2X2/B	2903260	234
PSR-SCP-24DC/URML4/3X1/1X2/B	2903583	232
PSR-SCP-42-230UC/URM4/4NO/2NC	2702924	232
PSR-SCP-42-48UC/ESAM4/3X1/1X2B	2901416	229
PSR-SPF-24UC/URM/4X1/2X2	2981457	247
PSR-SPP- 24DC/ESD/4X1/30	2981813	230
PSR-SPP- 24DC/ESD/5X1/1X2/ T 1	2981156	230
PSR-SPP- 24DC/ESD/5X1/1X2/ T 3	2981237	230
PSR-SPP- 24DC/ESD/5X1/1X2/ T 5	2981279	230
PSR-SPP- 24DC/ESD/5X1/1X2/0T 5	2981130	230
PSR-SPP- 24DC/ESP4/2X1/1X2	2981017	256
PSR-SPP- 24DC/FSP/1X1/1X2	2981981	254
PSR-SPP- 24DC/FSP/2X1/1X2	2986957	255
PSR-SPP- 24DC/FSP2/2X1/1X2	2986588	255
PSR-SPP- 24DC/RSM4/4X1	2981541	244
PSR-SPP- 24DC/SDC4/2X1/B	2981499	231
PSR-SPP- 24DC/SIM4	2981949	233
PSR-SPP- 24DC/TS/M	2986025	261
PSR-SPP- 24DC/TS/S	2986232	261
PSR-SPP- 24DC/TS/SDI8/SDIO4	2986041	262
PSR-SPP- 24DC/TS/SDOR4/4X1	2986106	262
PSR-SPP- 24DC/URD3/4X1/2X2	2981525	233
PSR-SPP- 24DC/URD3/4X1/2X2/3	2981745	233
PSR-SPP- 24DC/URM4/4X1/2X2/B	2981680	233
PSR-SPP- 24UC/ESA2/4X1/1X2/B	2963954	229
PSR-SPP- 24UC/ESAM4/2X1/1X2	2900526	229
PSR-SPP- 24UC/ESAM4/3X1/1X2/B	2900510	229
PSR-SPP- 24UC/ESL4/3X1/1X2/B	2981062	231
PSR-SPP- 24UC/THC4/2X1/1X2	2963983	231
PSR-SPP- 24UC/URM/3X1/3X2	2981842	246
PSR-SPP- 24UC/URM/5X1/1X2	2981965	246
PSR-SPP- 24UC/URM/5X1/2X2	2963970	245
PSR-SPP- 24UC/URM4/5X1/2X2	2964005	232
PSR-SPP- 24UC/URM4/5X1/2X2/B	2981046	232
PSR-SPP-120UC/ESAM4/3X1/1X2/B	2901425	229
PSR-SPP-230AC/ESAM2/3X1/1X2/B	2901431	229
PSR-SPP-230UC/ESAM4/3X1/1X2/B	2901429	229
PSR-SPP-24DC/ESD/5X1/1X2/300	2981431	230
PSR-SPP-24DC/MXF1/4X1/2X2/B	2902726	234
PSR-SPP-24DC/MXF2/4X1/2X2/B	2903255	234
PSR-SPP-24DC/MXF3/4X1/2X2/B	2903258	234
PSR-SPP-24DC/MXF4/4X1/2X2/B	2903261	234
PSR-SPP-24DC/URML4/3X1/1X2/B	2903584	232
PSR-SPP-24UC/ESAM4/8X1/1X2	2963996	229
PSR-SPP-42-230UC/URM4/4NO/2NC	2702925	232
PSR-SPP-42-48UC/ESAM4/3X1/1X2B	2901417	229
PSR-TBUS	2890425	233
PSR-TBUS-TP	2981716	233
PSR-TRISAFE STARTER KIT	2986300	261

Q

Type	Order No.	Page
QUICK WIREFOX 6	1204384	442

R

Type	Order No.	Page
RAD-2400-IFS	2901541	376
RAD-2400-IFS-JP	2702863	376
RAD-868-CONF-RF1	2702197	377
RAD-868-IFS	2904909	377
RAD-900-ANT-OMNI-2-2-RSMA	2904801	395
RAD-900-CONF-RF1	2702122	377
RAD-900-DAIO6	2702877	377
RAD-900-IFS	2901540	377
RAD-900-IFS-AU	2702878	377
RAD-ADP-N/F-N/F	2867843	392
RAD-AI4-IFS	2901537	382
RAD-ANT-VAN-MKT	2885870	388
RAD-AO4-IFS	2901538	383
RAD-CAB-EF393- 3M	2867649	391
RAD-CAB-EF393- 5M	2867652	391
RAD-CAB-EF393-10M	2867665	391
RAD-CAB-EF393-15M	2885634	391
RAD-CAB-PFP240-10	5606124	397
RAD-CAB-PFP400-100	2867238	397
RAD-CAB-PFP400-20	5606125	397
RAD-CAB-PFP400-60	2867380	397
RAD-CAB-PFP400-80	2867393	397
RAD-CAB-PFP500-25	5606126	397
RAD-CAB-PFP600-150	2885184	397
RAD-CAB-RG213-40	2867377	397
RAD-CAB-RG213-50	2867225	397
RAD-CABLE-USB	2903447	376
RAD-CON-MCX-N-SB	2867717	396
RAD-CON-MCX90-N-SS	2885207	396
RAD-CON-SMA-N-SS	2867403	396
RAD-CONF-RF3	2902814	376
RAD-CONF-RF5	2902815	376
RAD-CONF-RF7	2902816	376
RAD-DAIO6-IFS	2901533	380
RAD-DI4-IFS	2901535	380
RAD-DI8-IFS	2901539	381
RAD-DO8-IFS	2902811	381
RAD-DOR4-IFS	2901536	381
RAD-ISM-2400-ANT-OMNI-2-1-RSMA	2701362	388
RAD-ISM-2400-ANT-OMNI-6-0	2885919	389
RAD-ISM-2400-ANT-PAR-19-0	2867885	389
RAD-ISM-2400-ANT-VAN-3-0-RSMA	2701358	388
RAD-ISM-2459-ANT-FOOD-6-0-N	2702898	388
RAD-ISM-900-ANT-OMNI-0-6	2867160	395
RAD-ISM-900-ANT-OMNI-5	2867199	395
RAD-ISM-900-ANT-OMNI-FG-3-N	2867791	395
RAD-ISM-900-ANT-OMNI-FG-6-N	2885579	395
RAD-ISM-900-ANT-YAGI-10-N	5606614	390
RAD-ISM-900-ANT-YAGI-3-N	2867801	395
RAD-ISM-900-ANT-YAGI-6.5-N	2867814	390
RAD-ISM-900-EN-BD	2900016	387
RAD-ISM-900-EN-BD-BUS	2900017	387
RAD-ISM-900-EN-BD/B	2901205	387
RAD-MEMORY	2902828	376
RAD-NAM4-IFS	2316275	461
RAD-PIG-EF316-N-RSMA	2701402	391
RAD-PIG-RSMA/N-0.5	2903263	391
RAD-PIG-RSMA/N-1	2903264	391
RAD-PIG-RSMA/N-2	2903265	391
RAD-PIG-RSMA/N-3	2903266	391
RAD-PIG-RSMA/N-5	2702140	391
RAD-PT100-4-IFS	2904035	383
RAD-RS485-IFS	2702184	379
RAD-SPL-2-N/N	2702293	393
RAD-TAPE-SV-19-3	2903182	392
RAD-WHA-1/2NPT	2900100	385
RAD-WHG/WLAN-XD	2900178	384
REL-SR- 24DC/2X21	2961574	247
RESYGATE 3000	2400129	416
RFC 4072S	1051328	11
RFC 460R PN 3TX	2700784	53
RFC 470 PN 3TX	2916600	53
RFC 470S PN 3TX	2916794	30
RFC 480S PN 4TX	2404577	53
RFC DUAL-FAN	2730239	53
RFC FAN MODULE	2404085	11
RL PN 24-2 DI 16 2TX	2773665	203
RL PN 24-2 DIO 16/8 2TX	2773652	203
RL PN 24-2 DIO 8/8 2SCRJ	2773513	203

S

Type	Order No.	Page
SAC-2P- 2,0-910/FSB SCO	1518067	198
SAC-2P- 5,0-910/FSB SCO	1518070	198
SAC-2P-10,0-910/FSB SCO	1518083	198
SAC-2P-15,0-910/FSB SCO	1518096	198
SAC-2P-MSB-FSB SCO/910/...	1538092	444
SAC-2P-MSB/ 0,3-910/FSB SCO	1518106	198
SAC-2P-MSB/ 0,5-910/FSB SCO	1518119	198
SAC-2P-MSB/ 1,0-910/FSB SCO	1518122	198
SAC-2P-MSB/ 2,0-910 SCO	1518025	198
SAC-2P-MSB/ 2,0-910/FSB SCO	1518135	198
SAC-2P-MSB/ 5,0-910 SCO	1518038	198
SAC-2P-MSB/ 5,0-910/FSB SCO	1518148	198
SAC-2P-MSB/10,0-910 SCO	1518041	198
SAC-2P-MSB/10,0-910/FSB SCO	1518151	198
SAC-2P-MSB/15,0-910 SCO	1518054	198
SAC-2P-MSB/15,0-910/FSB SCO	1518164	198
SAC-3P- 3,0-PUR/M 8SIFS AE	1417698	499
SAC-3P-M 8MS/ 0,6-PUR/M 8SIFS	1417699	499
SAC-3P-M 8MS/ 1,0-PUR/M 8SIFS	1417700	499
SAC-3P-M 8MS/ 3,0-PUR/M 8SIFS	1417701	499
SAC-3P-M12Y/2XM12FS PE	1683455	197
SAC-4P- 1,0-PUR/M12FRT	1408827	185
SAC-4P- 1,0-PUR/M12FST	1408823	185
SAC-4P- 2,0-950/M 8FR	1550902	200
SAC-4P- 2,0-950/M 8FS	1543294	200
SAC-4P- 2,0-PUR/M 8FR 0,34	1553077	200
SAC-4P- 2,0-PUR/M 8FS 0,34	1543582	200
SAC-4P- 2,0-PUR/M12FRT	1408828	185
SAC-4P- 2,0-PUR/M12FST	1408824	185
SAC-4P- 5,0-950/M 8FR	1550915	200
SAC-4P- 5,0-950/M 8FS	1543304	200
SAC-4P- 5,0-PUR/M 8FR 0,34	1553080	200
SAC-4P- 5,0-PUR/M 8FS 0,34	1534818	200
SAC-4P- 5,0-PUR/M12FRT	1408829	185
SAC-4P- 5,0-PUR/M12FST	1408825	185
SAC-4P-10,0-950/M 8FR	1550928	200
SAC-4P-10,0-950/M 8FS	1543317	200
SAC-4P-10,0-PUR/M 8FR 0,34	1553093	200
SAC-4P-10,0-PUR/M 8FS 0,34	1543595	200
SAC-4P-10,0-PUR/M12FRT	1408830	185
SAC-4P-10,0-PUR/M12FST	1408826	185
SAC-4P-20,0-950/M 8FR	1550944	200
SAC-4P-20,0-950/M 8FS	1543333	200
SAC-4P-20,0-PUR/M 8FR 0,34	1553116	200
SAC-4P-20,0-PUR/M 8FS 0,34	1543618	200
SAC-4P-M 8MR/ 0,13-950/M 8FR	1550957	200
SAC-4P-M 8MR/ 0,3-950/M 8FR	1550960	200
SAC-4P-M 8MR/ 0,5-950/M 8FR	1550973	200
SAC-4P-M 8MR/ 1,0-950/M 8FR	1550986	200
SAC-4P-M 8MR/ 2,0-950	1550850	200
SAC-4P-M 8MR/ 2,0-950/M 8FR	1550999	200
SAC-4P-M 8MR/ 5,0-950	1550863	200
SAC-4P-M 8MR/ 5,0-950/M 8FR	1551008	200
SAC-4P-M 8MR/10,0-950	1550876	200
SAC-4P-M 8MR/10,0-950/M 8FR	1551011	200
SAC-4P-M 8MR/20,0-950	1550892	200
SAC-4P-M 8MR/20,0-950/M 8FR	1551037	200
SAC-4P-M 8MS/ 0,13-950/M 8FS	1543346	200
SAC-4P-M 8MS/ 0,3-950/M 8FS	1543511	200
SAC-4P-M 8MS/ 1,0-950/M 8FS	1543537	200
SAC-4P-M 8MS/ 2,0-950	1543249	200
SAC-4P-M 8MS/ 2,0-950/M 8FS	1543359	200
SAC-4P-M 8MS/ 5,0-950	1543252	200
SAC-4P-M 8MS/ 5,0-950/M 8FS	1543362	200
SAC-4P-M 8MS/10,0-950	1543265	200
SAC-4P-M 8MS/10,0-950/M 8FS	1543375	200
SAC-4P-M 8MS/20,0-950	1543281	200
SAC-4P-M 8MS/20,0-950/M 8FS	1543391	200
SAC-4P-M12MRT/ 1,0-PUR	1408816	185
SAC-4P-M12MRT/ 1,0-PUR/M12FRT	1415196	185
SAC-4P-M12MRT/ 2,0-PUR	1408819	185
SAC-4P-M12MRT/ 2,0-PUR/M12FRT	1415197	185
SAC-4P-M12MRT/ 5,0-PUR	1408820	185
SAC-4P-M12MRT/ 5,0-PUR/M12FRT	1415198	185
SAC-4P-M12MRT/10,0-PUR	1408822	185
SAC-4P-M12MRT/10,0-PUR/M12FRT	1415199	185
SAC-4P-M12MSD/ 0,3-933/M12MSD	1524349	198
SAC-4P-M12MSD/ 0,5-931/M12MSD	1569443	199
SAC-4P-M12MSD/ 0,5-933/M12MSD	1524352	198
SAC-4P-M12MSD/15,0-931	1569427	199
SAC-4P-M12MSD/15,0-933	1524336	198
SAC-4P-M12MSD/15,0-933/M12MSD	1524404	198
SAC-4P-M12MST/ 1,0-PUR	1408812	185
SAC-4P-M12MST/ 1,0-PUR/M12FST	1408808	185
SAC-4P-M12MST/ 2,0-PUR	1408813	185
SAC-4P-M12MST/ 2,0-PUR/M12FST	1408809	185
SAC-4P-M12MST/ 5,0-PUR	1408814	185
SAC-4P-M12MST/ 5,0-PUR/M12FST	1408810	185

Type	Order No.	Page
SAC-4P-M12MST/10,0-PUR	1408815	185
SAC-4P-M12MST/10,0-PUR/M12FST	1408811	185
SAC-4PY-MT/2XFT VP	1410632	184
SAC-5P- 2,0-186/FS SCO	1518368	199
SAC-5P- 2,0-900/FSB SCO	1517916	198
SAC-5P- 5,0-186/FS SCO	1518371	199
SAC-5P- 5,0-900/FSB SCO	1517929	198
SAC-5P-10,0-186/FS SCO	1518384	199
SAC-5P-10,0-900/FSB SCO	1517932	198
SAC-5P-15,0-186/FS SCO	1518397	199
SAC-5P-15,0-900/FSB SCO	1517945	198
SAC-5P-M12FS CAN TR	1529344	444
SAC-5P-M12FS PB TR	1403911	444
SAC-5P-M12MS BK BR 1-2-4	1054366	213
SAC-5P-M12MS CAN TR	1507816	444
SAC-5P-M12MS PB TR	1507803	197
SAC-5P-MS-FS SCO/920/...	1538157	444
SAC-5P-MS/ 0,13-186/FS SCO	1518481	199
SAC-5P-MS/ 0,3-186/FS SCO	1518407	199
SAC-5P-MS/ 0,5-186/FS SCO	1518410	199
SAC-5P-MS/ 1,0-186/FS SCO	1518423	199
SAC-5P-MS/ 1,0-920/FS SCO	1518274	444
SAC-5P-MS/ 2,0-186 SCO	1518326	199
SAC-5P-MS/ 2,0-186/FS SCO	1518436	199
SAC-5P-MS/ 5,0-186 SCO	1518339	199
SAC-5P-MS/ 5,0-186/FS SCO	1518449	199
SAC-5P-MS/10,0-186 SCO	1518342	199
SAC-5P-MS/10,0-186/FS SCO	1518452	199
SAC-5P-MS/15,0-186 SCO	1518355	199
SAC-5P-MS/15,0-186/FS SCO	1518465	199
SAC-5P-MSB/ 0,3-900/FSB SCO	1517958	198
SAC-5P-MSB/ 0,5-900/FSB SCO	1517961	198
SAC-5P-MSB/ 1,0-900/FSB SCO	1517974	198
SAC-5P-MSB/ 2,0-900 SCO	1517877	198
SAC-5P-MSB/ 2,0-900/FSB SCO	1517987	198
SAC-5P-MSB/ 5,0-900 SCO	1517880	198
SAC-5P-MSB/ 5,0-900/FSB SCO	1517990	198
SAC-5P-MSB/0,13-PUR/FSB SCO SH	1518478	199
SAC-5P-MSB/10,0-900 SCO	1517893	198
SAC-5P-MSB/10,0-900/FSB SCO	1518009	198
SAC-5P-MSB/15,0-900 SCO	1517903	198
SAC-5P-MSB/15,0-900/FSB SCO	1518012	198
SAC-8PY-M/2XF BK 1-PSR	1054338	213
SAC-8PY-M/2XF BK 2-PSR	1054339	213
SAC-8PY-M/2XF BK 3-PSR	1054341	213
SACC-FS-4QO-0,34-M SCO	1521588	201
SACC-FS-4QO-0,75-M SCO	1521601	201
SACC-FS-5QO-0,75 SH SCO	1413992	201
SACC-FSB-2QO SH PB SCO	1413932	201
SACC-FSD-4QO SH ETH SCO	1411069	201
SACC-FSD-4QO SH PN SCO	1411071	201
SACC-M 8FS-4CON-M-0,34-SH	1542910	201
SACC-M 8FS-4QO-0,5-M	1441079	201
SACC-M 8MS-3QO-0,5-M	1441024	201
SACC-M 8MS-4CON-M-0,34-SH	1542897	201
SACC-M12FRT-4CON-PG11-M	1408989	184
SACC-M12FS-5PL M	1424652	201
SACC-M12FSB-5PL SH IB	1424676	201
SACC-M12FST-3PECON-PG11-M	1404644	184
SACC-M12MRT-4CON-PG11-M	1408988	184
SACC-M12MSB-5PL SH IB	1424674	201
SACC-M12MST-3PECON-PG11-M	1404643	184
SACC-MS-4QO-0,34-M SCO	1521575	201
SACC-MS-4QO-0,75-M SCO	1521591	201
SACC-MS-5QO-0,75 SH SCO	1413991	201
SACC-MSB-2QO SH PB SCO	1413931	201
SACC-MSD-4QO SH ETH SCO	1411066	201
SACC-MSD-4QO SH PN SCO	1411068	201
SAFE AI	2400057	281
SAFECONF	2986119	279
SAFETYPROG ADVANCED	2700441	280
SAFETYPROG BASIC	2700443	280
SAFETYPROG PROFESSIONAL	2700442	280
SD FLASH 2GB	2988162	22
SD FLASH 2GB 61850	2400435	46
SD FLASH 2GB APPLIC A	2701190	55
SD FLASH 2GB APPLIC A 61850	2400436	46
SD FLASH 2GB APPLIC A ATVISE	2400089	55
SD FLASH 2GB ATVISE	2400088	55
SD FLASH 2GB AXC EASY SAFE PRO	2403730	55
SD FLASH 2GB EASY SAFE BASIC	2403297	55
SD FLASH 2GB EASY SAFE PRO	2403298	55
SD FLASH 2GB EMLOG	2403484	55
SD FLASH 2GB PLCNEXT MEMORY	1043501	10
SD FLASH 512MB	2988146	22
SD FLASH 512MB APPLIC A	2701799	55
SD FLASH 512MB MODULAR MUX	2701872	55
SD FLASH 512MB PDPI BASIC	2701800	55
SD FLASH 512MB PDPI PRO	2701801	55
SD FLASH 8GB PLCNEXT MEMORY	1061701	10
SKS 8-SNS35	3062786	379
STEP-PS/ 1AC/24DC/0.75	2868635	402
SUBCON 9/M-SH	2761509	451
SUBCON 15/F-SH	2761596	451
SUBCON 15/M-SH	2761606	451
SUBCON 25/F-SH	2761619	451
SUBCON 25/M-SH	2761622	451
SUBCON 9/F-SH	2761499	451
SUBCON-PLUS 9/F	2744241	450
SUBCON-PLUS 9/M	2744018	450
SUBCON-PLUS F1	2744267	450
SUBCON-PLUS F2	2799490	450
SUBCON-PLUS M1	2761826	450
SUBCON-PLUS M2	2761839	450
SUBCON-PLUS-CAN	2744694	449
SUBCON-PLUS-CAN/35/M12	2902325	445
SUBCON-PLUS-CAN/35/PG/M12	2902324	445
SUBCON-PLUS-CAN/90/M12	2902323	445
SUBCON-PLUS-CAN/90/PG/M12	2902322	445
SUBCON-PLUS-CAN/90X/M12	2902731	444
SUBCON-PLUS-CAN/90X/PG/M12	2902730	444
SUBCON-PLUS-CAN/AX	2306566	449
SUBCON-PLUS-CAN/AX/M12	2902326	445
SUBCON-PLUS-CAN/PG	2708119	448
SUBCON-PLUS-CAN/SC2	2708999	448
SUBCON-PLUS-F/AX 9	2311797	450
SUBCON-PLUS-M/AX 9	2904467	450
SUBCON-PLUS-MODBUS/IL/BK	2310808	108
SUBCON-PLUS-PROFIB	2744348	109
SUBCON-PLUS-PROFIB/35/M12	2902320	445
SUBCON-PLUS-PROFIB/35/PG/M12	2902319	445
SUBCON-PLUS-PROFIB/90/IDC	2313672	447
SUBCON-PLUS-PROFIB/90/M12	2902318	445
SUBCON-PLUS-PROFIB/90/PG/IDC	2313685	447
SUBCON-PLUS-PROFIB/90/PG/M12	2902317	445
SUBCON-PLUS-PROFIB/90/PG/SC	2313708	447
SUBCON-PLUS-PROFIB/90/SC	2313698	447
SUBCON-PLUS-PROFIB/90X/M12	2902729	444
SUBCON-PLUS-PROFIB/90X/PG/M12	2902728	444
SUBCON-PLUS-PROFIB/AX	2744377	447
SUBCON-PLUS-PROFIB/AX/M12	2902321	445
SUBCON-PLUS-PROFIB/AX/SC	2744380	447
SUBCON-PLUS-PROFIB/PG/SC2	2708245	446
SUBCON-PLUS-PROFIB/SC2	2708232	446
SUBCON-SHORT-SCREW	2799694	450
SZS 0,4X2,5 VDE	1205037	443

T

Type	Order No.	Page
TC ANT MOBILE CABINET 10M	1046361	415
TC ANT MOBILE WALL 5M	2702273	415
TC CLOUD CLIENT 1002-4G	2702886	407
TC CLOUD CLIENT 1002-4G ATT	2702888	407
TC CLOUD CLIENT 1002-4G VZW	2702887	407
TC CLOUD CLIENT 1002-TX/TX	2702885	406
TC DSL ROUTER X400 A/B	2902709	411
TC DSL ROUTER X500 A/B	2902710	411
TC EXTENDER 2001 ETH-2S	2702409	349
TC EXTENDER 4001 ETH-1S	2702253	349
TC EXTENDER 6004 ETH-2S	2702255	349
TC EXTENDER PT-IQ-1S	2702257	349
TC EXTENDER PT-IQ-2S	2702258	349
TC MGUARD RS2000 3G VPN	2903441	405
TC MGUARD RS2000 4G ATT VPN	1010464	405
TC MGUARD RS2000 4G VPN	2903588	405
TC MGUARD RS2000 4G VZW VPN	1010462	405
TC MGUARD RS4000 3G VPN	2903440	404
TC MGUARD RS4000 4G ATT VPN	1010463	405
TC MGUARD RS4000 4G VPN	2903586	404
TC MGUARD RS4000 4G VZW VPN	1010461	405
TC MOBILE I/O X200	2903805	402
TC MOBILE I/O X200 AC	2903806	402
TC MOBILE I/O X200-4G	1038567	403
TC MOBILE I/O X200-4G AC	1038568	403
TC MOBILE I/O X300	2903807	403
TC MOBILE I/O X300 AC	2903808	403
TC ROUTER 2002T-3G	2702531	413
TC ROUTER 2002T-4G	2702530	413
TC ROUTER 3002T-3G	2702529	413
TC ROUTER 3002T-4G	2702528	413
TC ROUTER 3002T-4G ATT	2702533	413
TC ROUTER 3002T-4G VZW	2702532	413
TC-2D37SUB-DO16-ESD-AR-UNI	2902913	257
TC-2D37SUB-DO16-F&G-AR-UNI	2902914	257
TC-C-PCX3-SC-A100V+A20000	2906003	257
TC-C-PSR3-SC-A10000A20000	2903389	257
TC-C-PSR3-SC-A10000A23132	2903390	257
TC-C-PTSM-50-00000000J1J1	2903388	257
TOUCH PEN	2701379	494
TP 3043W	2402629	472
TP 3043W/WT	2404286	489
TP 3057Q	2400452	472
TP 3057V	2400453	472
TP 3057V/WT	2403464	489
TP 3057V/WT-65	1044278	489
TP 3070W	2400454	472
TP 3070W/P	2403459	473
TP 3070W/WT	2403465	489
TP 3070W/WT-65	1044266	489
TP 3090W	2402630	472
TP 3090W/P	2403460	473
TP 3105S	2400455	472
TP 3120W	2400457	472
TP 3120W/P	2403461	473
TP 3120W/WT	1029308	489
TP 3120W/WT-65	1029352	489
TP 3121S	2400456	472
TP 3121S/WT	2403466	489
TP 3121S/WT-65	1029343	489
TP 3150S	2400458	472
TP 3150S/WT	1029281	489
TP 3150S/WT-65	1029309	489
TP 3154W	2402631	472
TP 3156W/P	2403462	473
TP 3185W/P	2403862	473
TPM 3043	2404516	494
TPM 3057	2404517	494
TPM 3070	2404518	494
TPM 3090	2404519	494
TPM 3105	2404520	494
TPM 3120	2404522	494
TPM 3121	2404521	494
TPM 3150	2404524	494
TPM 3154	2404525	494
TRIO-PS-2G/1AC/24DC/3/C2LPS	2903147	406
TVFKC 1,5/ 3-ST	1713842	379

U

Type	Order No.	Page
USB FLASH DRIVE	2402809	53

V

Type	Order No.	Page
VISU+ 2	2988544	33
VISU+ 2 EXPRESS	2402774	33
VL BPC 2000	2402759	476
VL BPC 3000	2400183	476
VL KVM EXTENDER	2404770	478
VL PORTICO SERVER 1 CLIENT	2701453	38
VL PORTICO SERVER 16 CLIENT	2701456	38
VL PORTICO SERVER 4 CLIENT	2701455	38
VL PPC 2000	2402760	483
VL PPC 3000	2400184	483
VL2 BPC 1000	2403046	474
VL2 BPC 1000 EX	1054028	491
VL2 BPC 2000	2400332	474
VL2 BPC 2000 EX	1054027	491
VL2 BPC 3000	2400492	474
VL2 BPC 3000 EX	1054025	491
VL2 BPC 7000	2400333	474
VL2 BPC 7000 EX	1054024	491
VL2 BPC 9000	2400499	474
VL2 BPC 9000 EX	1054023	491
VL2 PPC 1000	2403047	480
VL2 PPC 1000 EX	1050366	493
VL2 PPC 2000	2400334	481
VL2 PPC 2000 EX	1050367	493
VL2 PPC 3000	2400498	481
VL2 PPC 3000 EX	1050368	493
VL2 PPC 7000	2400346	481
VL2 PPC 7000 EX	1050365	493
VL2 PPC 9000	2400500	481
VL2 PPC 9000 EX	1050364	493
VL2 PPC12 1000	2403710	480
VL2 PPC12 1000 EX	1054094	492
VL2 PPC7 1000	2403708	480
VL2 PPC7 1000 EX	1054096	492
VL2 PPC9 1000	2403709	480
VL2 PPC9 1000 EX	1054095	492
VMT 9000	1084510	490

W

Type	Order No.	Page
WEBVISIT 6 BASIC	2700948	31
WEBVISIT 6 BASIC-PRO	2700950	31
WEBVISIT 6 EXPRESS	2700954	31
WEBVISIT 6 PRO	2700949	31
WP 04T	2913632	470
WP 06T	2913645	470
WP 06T/WT	2400163	488
WP 07T/WS	2700307	470
WP 07T/WT	2400164	488
WP 09T/WS	2700309	470
WP 10T	2700934	470
WP 15T	2700935	470
WP 4000	1065546	469

Z

Type	Order No.	Page
ZBF 12 CUS	0825018	197
ZBF 12:UNBEDRUCKT	0809735	197
ZBF 8 CUS	0825030	197
ZBF 8:UNBEDRUCKT	0808781	197
ZEC 1,0/ 6-LPV-3,5 C1	1915699	459
ZEC 1,5/ 4-LPV-5,0 C2,4 BK	1793260	459

For up-to-date modifications or supplements
to the catalog contents, please visit:
phoenixcontact.net/webcode/#0132

PHOENIX CONTACT

INSPIRING INNOVATIONS