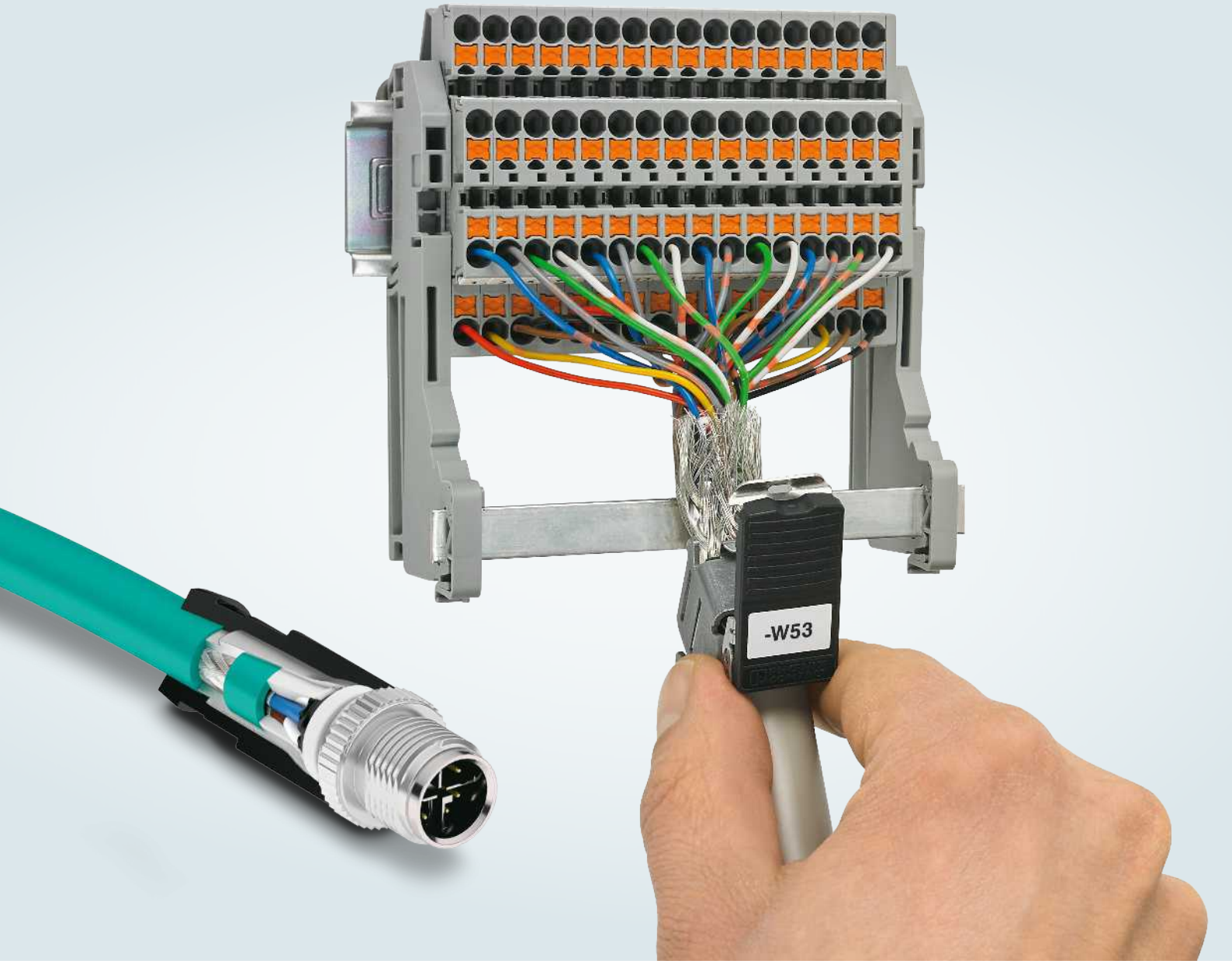

Shielding

Interference and protective measures

PHOENIX CONTACT

Proper shielding
Why is shielding necessary?

Shielding protects your systems against electromagnetic interference and other sources of interference while also protecting the environment against emitted interference. This results in interference-free signal transmission and signal processing, and also optimizes electromagnetic compatibility (EMC).



Find out more with the web code

You will find web codes throughout this brochure: a hash symbol followed by a four-digit number combination.

Web code: #1234 (example)

This allows you to access further information on our website quickly.

It could not be simpler:
1. Go to the Phoenix Contact website
2. Enter # and the number combination in the search field
3. Get more information and product versions

#1234 **Search**

Or use the direct link:
phoenixcontact.net/webcode/#1234

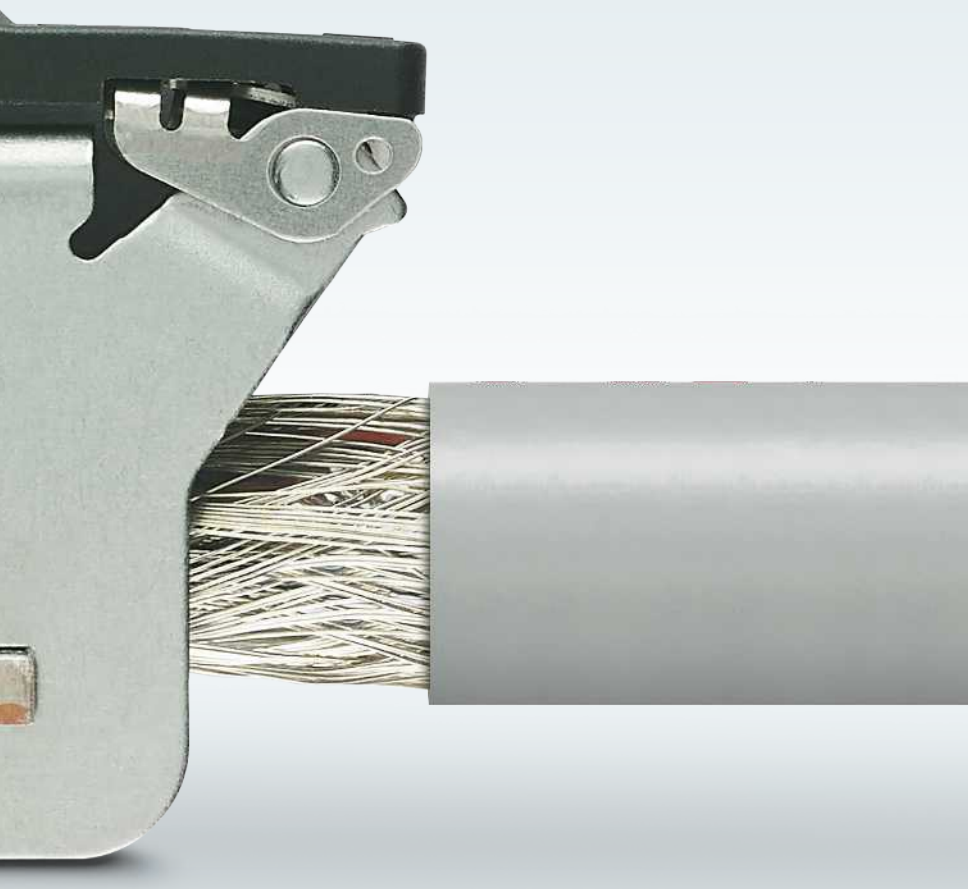

Contents

What is EMC?	4
Interference	5
Shielding	9
SCC shield clamps	16
SK shield clamps and shielding accessories	18
HEAVYCON heavy-duty connectors	20
Circular connectors and cables	22

1. What is EMC?

1.1 Electromagnetic compatibility

At the dawn of the electronic age, radio interference and interference with reception were a common occurrence during wireless transmission. With the growing popularity of electronic devices in recent decades, an increase in the type of interference mentioned above was also observed. This led to the assumption that the interference was caused by the devices themselves. When adjacent live conductors (+/-) were examined, it was found that voltage differences arise between them. These differences cause every electronic device to emit electromagnetic interference. The overlapping of various instances of **electromagnetic interference** from different devices increases the overall level of electromagnetic interference. It has therefore become necessary to protect all devices against electromagnetic interference. The effects of electromagnetic interference can cause a great deal of damage, especially in industrial process and production technology. A particularly high level of immunity is therefore needed for electrical MCR (measurement and control technology) equipment. Device manufacturers must issue a declaration of conformity for their products to guarantee this immunity. Devices may only be brought to market if they comply with the **EMC standard**.

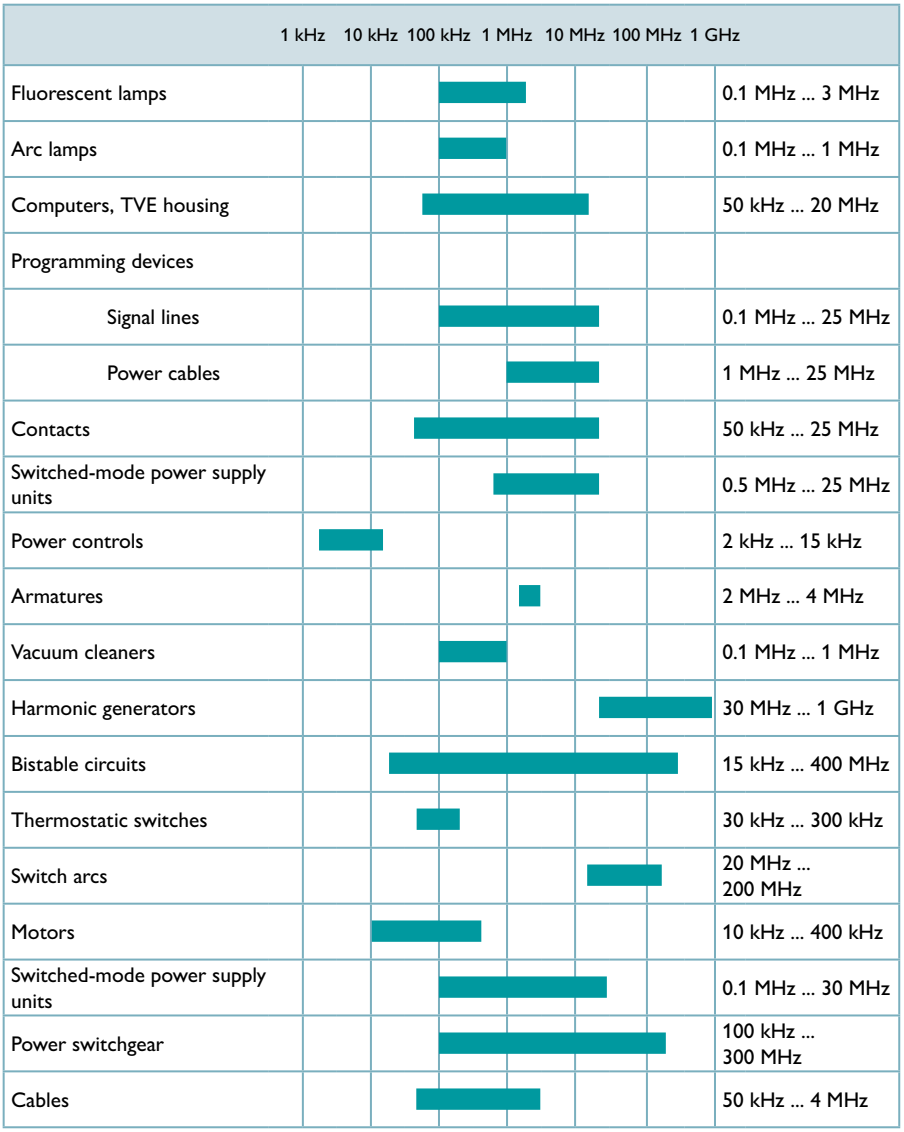

Frequency ranges of various devices affected by emitted interference.

European EMC legislation

Electromagnetic compatibility is the capacity of a device to work satisfactorily in an electromagnetic environment. The device itself must not cause any electromagnetic interference that would be unacceptable for other devices present in this environment.

1.2 How does electromagnetic field interference arise?

A consumer (Z) is supplied by a voltage source (U) via cables. Voltage differences arise between the positive and negative conductors, which generates an electrical field between the conductors.
A magnetic field (H) is generated around a live conductor. Due to it being current-dependent, this magnetic field is subject to temporal fluctuations. Because a time-constant current is only present in a very small number of applications, this leads to irregular, alternating magnetic fields. These fields become electromagnetic signals, a type of "mini-transmitter", and receivers at the same time. Each conductor is therefore capable of negatively influencing the function of other electrical and electronic devices.

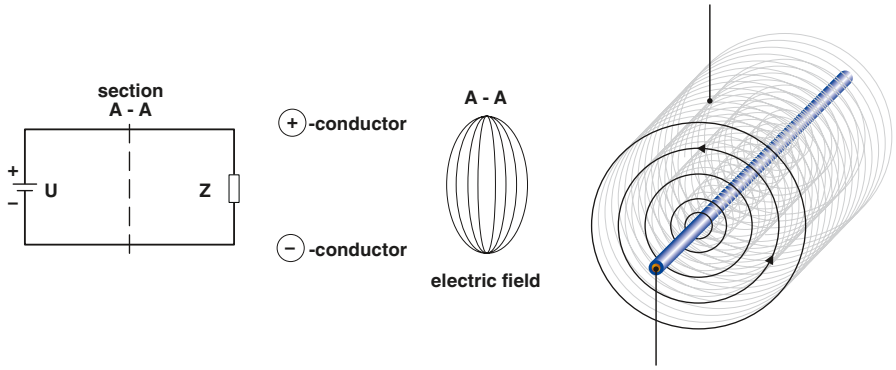

Electromagnetic interference fields

2. Interference

2.1 Types of interference

In practice, several interference mechanisms often occur at the same time. Furthermore, in addition to the devices, connecting cables are also affected. There are five different types of interference:

- Galvanic interference
- Capacitive interference
- Inductive interference
- Wave interference
- Radiation interference

The types of interference and the possible countermeasures are described below in more detail.

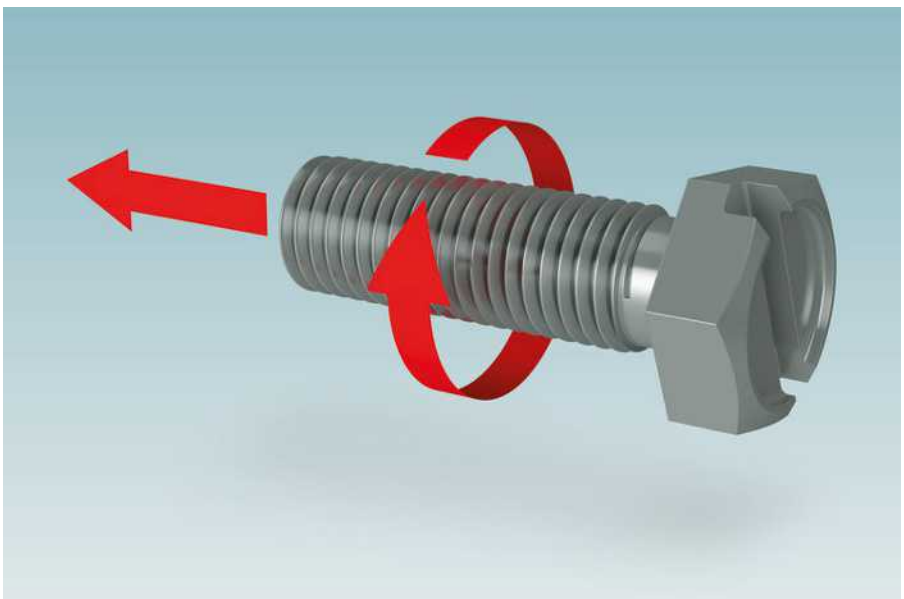

Screw principle for magnetic fields:
Imagine a screw with a right-hand thread. This screw represents a conductor. The technical current always flows from the screw head (+) to the screw tip (-). The screw's direction of rotation therefore determines the direction of the magnetic flux line.

2.2. Galvanic interference

Galvanic interference occurs when two circuits use a common conductive part. This is often a common reference or return conductor. Current or voltage fluctuations in the first circuit (e.g., switching operations) influence the second circuit. However, incorrect grounding of shielded MCR and data transmission cables can also result in galvanic interference.

Countermeasures:

- Ensure that the common conductive part is as low impedance and low inductance as possible. This is achieved by using sufficiently large conductor cross sections.
- Separate the circuits as much as possible.
- Keep common supply lines as short as possible.
- Position branching points as close to the current source as possible.

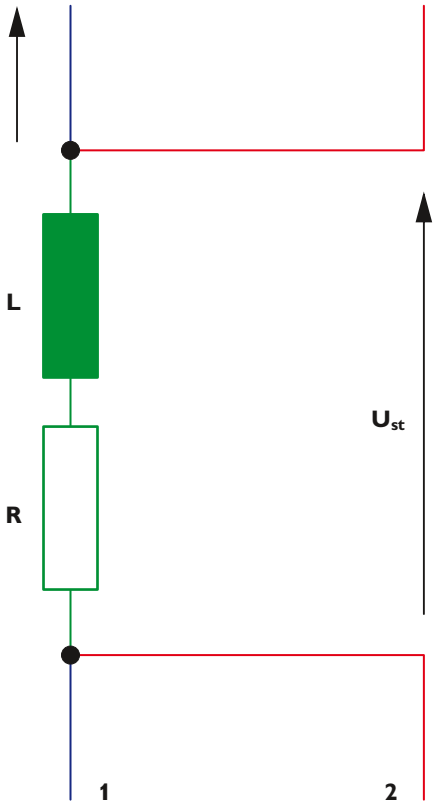

2.3 Capacitive interference

The disturbance variable of capacitive interference is the electrical voltage. Capacitive interference is caused by alternating electrical fields of a system that act as disruptors. A typical example of capacitive interference is when two cables laid in parallel over a longer path behave as two opposing capacitor plates and, in this role, act as a short circuit for high-frequency signals.

Countermeasures:

- Avoid parallel installation wherever possible or keep it as short as possible
- The distance between the disruptor and the disrupted cable must be as great as possible (minimum distance of 60 - 100 cm).
- Use shielded data transmission and MCR cables (shield connected at one end).
- Use twisted pair cables.

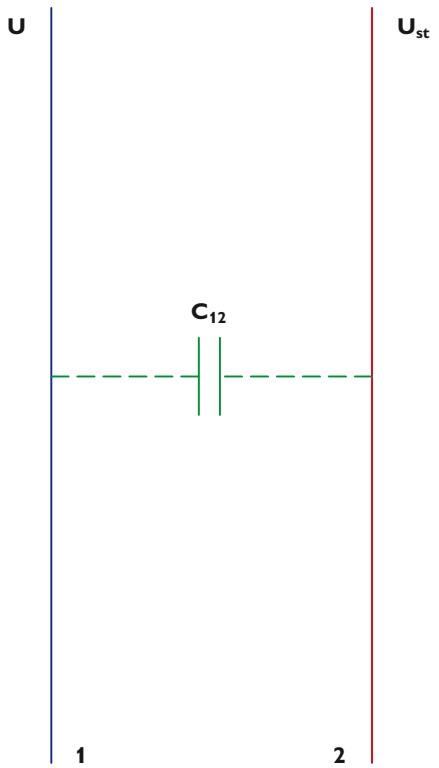

2.4 Inductive interference

Inductive interference is caused by an alternating magnetic field. A magnetic field is generated around a live conductor, which also penetrates adjacent conductors. A change in current also causes a change in the magnetic field, which then induces a voltage in the adjacent conductors.

Example:
When two 100 m cables are laid parallel to each other 30 cm apart and the current flowing through the disruptive conductor is 100 A (50 Hz), a voltage of approx. 0.3 mV is induced in the disrupted conductor. For the same arrangement but with a 1 kA change in current in 100 µs, a voltage of approx. 90 mV is induced. The faster and greater the change in current, the higher the induced voltage.

Countermeasures:

- Distance of at least 1 m between power cables and data transmission and MCR cables.
- Parallel paths should be as short as possible.
- Using twisted cables can reduce inductive interference by a factor of around 20.
- Use cables that are shielded at both ends.

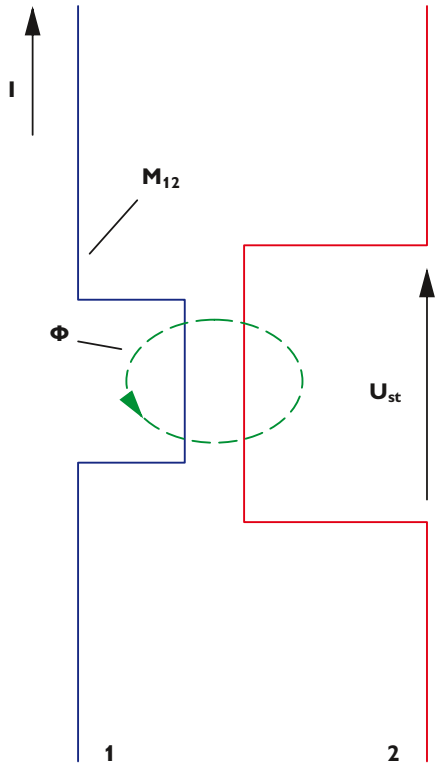

Twisted cables?

Using twisted cables reduces inductive interference because the direction of induction is constantly reversed in relation to the interference field due to the twisting of the wires. To avoid couplings, adjacent pairs in a data transmission or MCR cable are arranged with different twist pitches. Twist pitches from 30 to 50 mm are typically used. In the case of power cables, the twist pitch is between 200 and 900 mm depending on the conductor cross section.

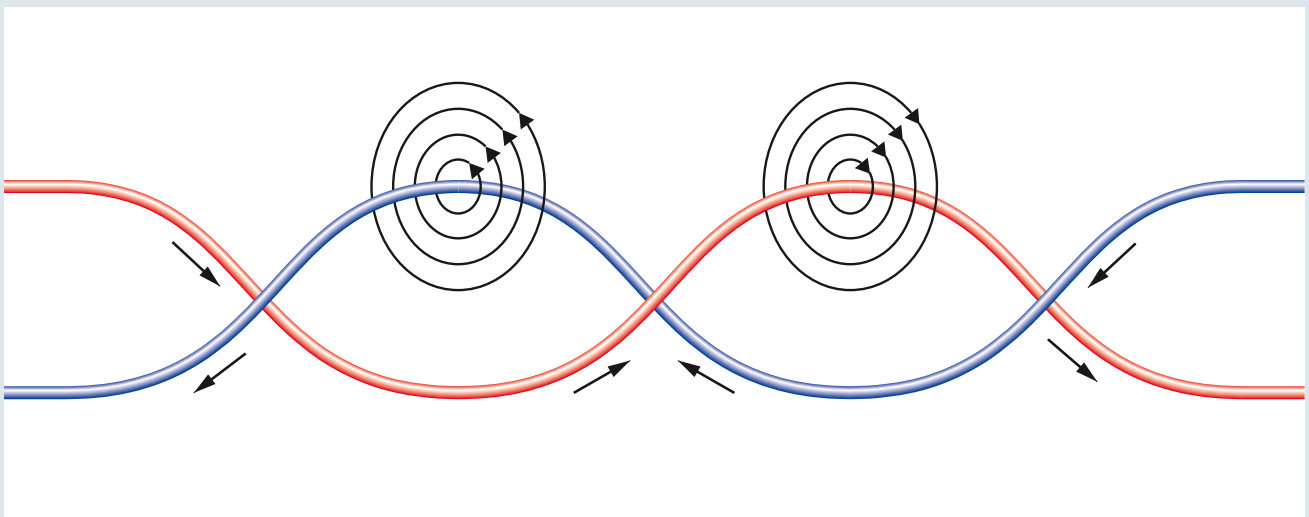

2.5 Wave interference

In the case of wave interference, conducted waves or pulses occur which overlap onto adjacent data transmission and MCR cables. Wave interference also occurs when one line circuit overlaps with another within a cable. In the case of galvanic, capacitive, and inductive interference, the runtime of the electrical signals on the disruptive cable and the disrupted cable is not taken into consideration. In exceptional cases, the wavelength of the interference frequency can come close to the size of the cable lengths. If this is the case, the effect must also be taken into consideration here.

Countermeasures:

- Use cables with shielded pairs and overall shielding.
- Avoid mismatching in the overall cable run.
- Signals with a very high level must not be transmitted via the same cable as signals with a very low level.
- Use cables with very low reflection, low attenuation, and low capacitance.

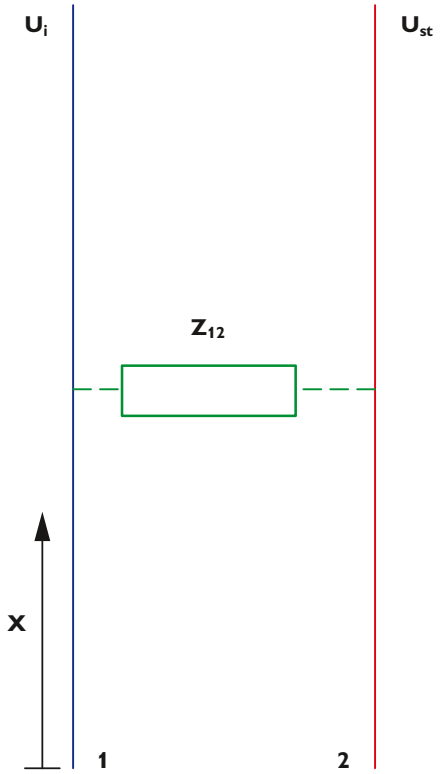

2.6 Radiation interference

Non-conductive electromagnetic waves from a disruptor can also affect systems and cables. The free wave H0, E0 is the disruptor. In the near field, the electrical or magnetic field can prevail depending on the type of interference. High currents predominantly generate a magnetic field, while high voltages predominantly generate an electrical field. High-frequency interference energy spreads via cables that are connected to the source of interference and enable direct radiation (>30 MHz). In addition, nearby powerful transmission stations can cause high field strengths at the location of the cable system and have a disruptive effect on cables. In industrial plants, by far the greatest interference is caused when switching off inductive loads. This process generates large, high-frequency voltage bursts. Bursts have a frequency spectrum of up to 100 MHz.

Countermeasures:

- Use shielding with high absorptive and reflective capacity in the far and near field (copper or aluminum). Conductive and ideally fully enclosed shielding with low coupling resistance and favorable shield attenuation values should be used here.
- In the case of a predominantly magnetic near field, especially at low frequencies, MuMetal or an amorphous metal should be used to provide additional shielding.

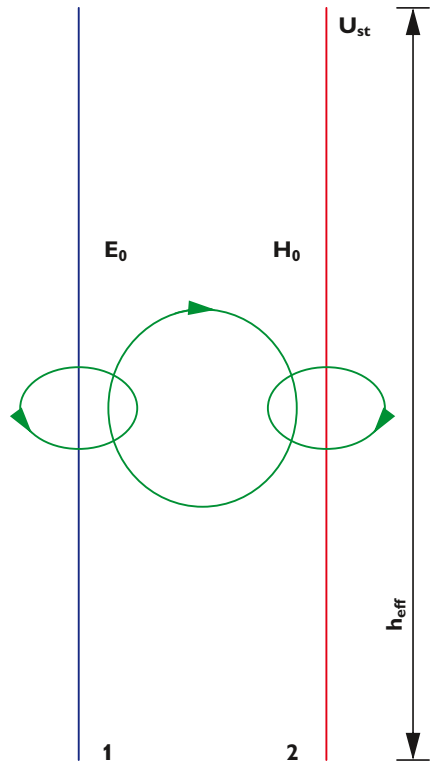

3. Shielding

3.1 Shielded cables

When considering the possible types of interference and the relevant countermeasures, it is clear that the cable shielding and the shield connection play an important role. Cable shields are often made from non-magnetic materials such as copper or aluminum. Iron or steel is rarely used; in special cases MuMetal is used. The shields commonly used for lines and cables are single braided shields that are constructed from two sets of wires running in opposite directions that are woven together. The density and thickness of the braid are the quality characteristics of the shield.

It is crucial to cover as much as possible of the conductor surface to be protected with the shield in order to prevent interference. An optical shield coverage below 75% is deemed insufficient. A minimum shield coverage of 85% should be observed, especially in high frequency ranges. In the case of highly critical applications, various shielding concepts can be combined. For example, braided and foil shields are often used together for cables with a transmission frequency upwards of 500 MHz.



Reliably shielded cables for signal, data, and power transmission

3.2 Shield connection

The type of shield connection used depends mainly on the type of interference to be expected.
For the suppression of electrical fields, it is necessary to ground (1) the shield at one end. However, interference caused by an alternating magnetic field is only suppressed when the shield is connected at both ends. Connecting the shield at both ends (2), however, creates a ground loop, bringing with it the associated well-known drawbacks. Galvanic interference along the reference potential in particular influences the useful signal and reduces the shielding effect. Here, the use of triaxial cables (4), in which the inner shield is connected at one end and the outer shield at both ends, can remedy this problem. To reduce galvanic interference when the cable shield is connected at both ends, one end is often also connected to the reference potential via a capacitor (3). This interrupts the ground loop, at least for direct and low-frequency currents.

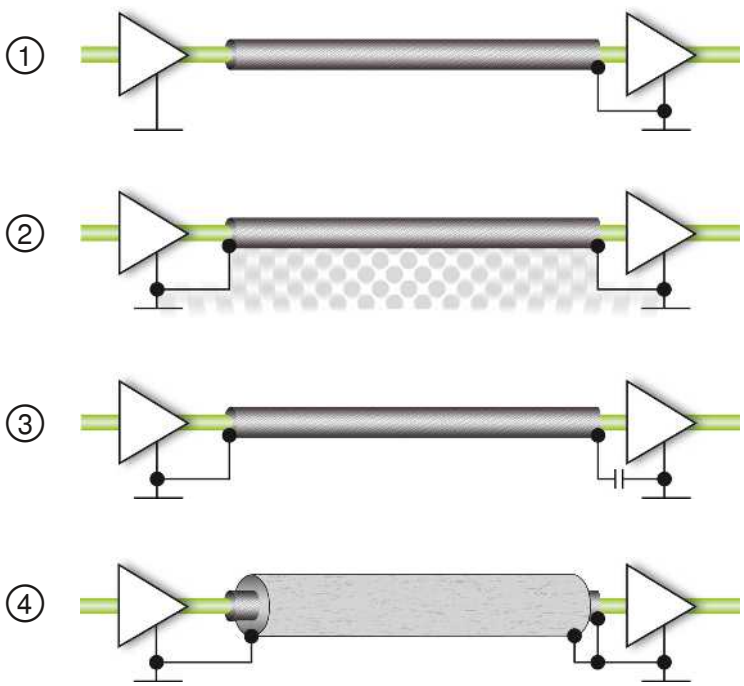

Ground loop

A ground loop is an arrangement in which the reference potential is closed to form a ring (see page 12).

3.3 Effectiveness of protective measures

The following example demonstrates the effectiveness of measures intended to protect against interference. The illustrated arrangement is exposed to an alternating magnetic field with 50 kHz over a length of 2 m. The interference voltage measured at the output is specified in relation to the interference voltage when the conductor shield is not connected (1) 0 dB. When a shield is connected at one end (2), there is no improvement as it is not effective against magnetic interference. When a shield is connected at both ends, as illustrated in Figure 3, the interference field is attenuated by approx. 25 dB. Even without shielding, the twisted cable (20 twists per meter) is less susceptible to interference (approx. 10 dB) in arrangement (4). This is achieved by the compensating effect of the conductor loops. When the shield is then connected at one end (5) there is once again no improvement. It is only when the shield is connected at both ends in arrangement (6) that the attenuation improves to approx. 30 dB.



1 Shielding attenuation 0 dB



2 Shielding attenuation 0 dB



3 Shielding attenuation 25 dB

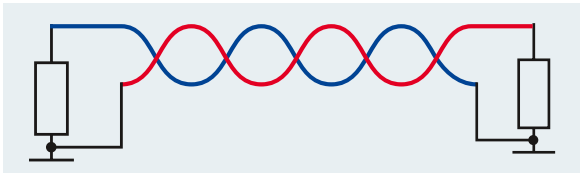

4 Shielding attenuation 10 dB

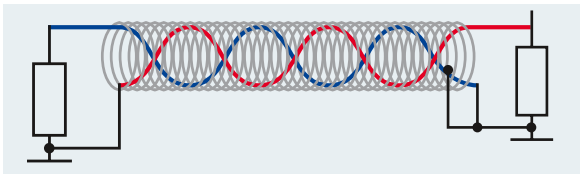

5 Shielding attenuation 10 dB

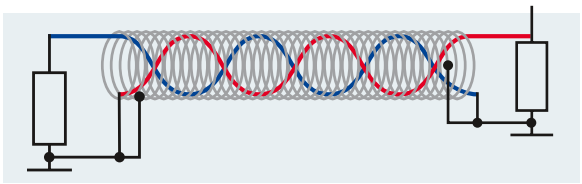

6 Shielding attenuation 30 dB

Shielding against electrical interference

3.4 Shield connection in practice

The shields of data transmission and MCR cables must be connected to the housing ground as soon as they enter the control cabinet. Space is tight at this point in the control cabinet due to the large number of incoming cables and lines. Only a shield clamp system that permits wiring upstream of the shield connection offers distinct advantages. The subsequent installation of the shield clamps makes work easier when space is at a premium and thus shortens the control cabinet assembly time. A shield clamp system consists of:

- Shield clamp
- Busbar
- Busbar support

The shield clamp is responsible for the mechanical and electrical connection of the cable shielding to the busbar. The size of the shield clamps used depends on the diameter of the cable used. The type of shielding determines the chosen busbar support, which either establishes direct contact with the housing ground or insulates the shield clamp system from the housing.



Shielding design

3.5 Direct grounding or insulated structure

As mentioned earlier, the type of shielding determines whether a structure directly contacted to the PE potential or an insulated structure is selected. For example, an insulated structure is necessary if the type of interference to be expected means that a star-shaped PE connection is required to a reference point in the control cabinet (see page 12). In this case, the contact point (star point) is further away from the contact point of the shield than is the case with direct connection. The cable shielding is no longer connected via the busbar support or the DIN rail. Instead, it is connected via a pick-off terminal and a cable that is connected to the control cabinet PE.

The conductor cross section used for this connection should not be too tight. This keeps the coupling resistance described later as low as possible.



Contact with the busbar

3.6 Flow effects

Another important aspect which must be taken into consideration when connecting cable and line shields are the flow effects of cables and lines. Under the pressure exerted by the shield connection clamp, the plastic of the insulation in particular flows into the remaining spaces at the side that have not yet been filled. This is counteracted by a spring-loaded pressure plate that compensates for this effect.

The spring action must be sufficient that the cable shielding is always pressed firmly against the busbar and good contact is therefore permanently ensured.



SCC and SK shield clamps

3.7 Low-impedance shield connection

The quality of a shield connection is reflected in the contact resistance between the cable shielding and system ground. With the exception of galvanic interference, all other types of interference are affected by frequency in some form or another. It is therefore not enough to simply consider the ohmic contact resistance. The inductive reactance of a shield connection, which mainly depends on the length of the path between the cable shielding and reference ground, also plays an important role here. This is the mutual impedance of the shield connection, which is represented as a frequency-dependent curve. A very short connection is achieved by using busbar supports that are contacted directly. For longer busbars, the path to the housing ground is shortened as directly contacted busbar supports are used not just at the ends of the busbar, but are also distributed along its entire length. If an insulated structure is chosen due to the type of interference to be expected, and the connection between the cable shielding and ground is longer, this can be compensated to some extent by a correspondingly larger cable cross section. However, a low-impedance connection is always also a low-resistance connection. This is why sufficient force must be applied to the mechanical contact points. The use of surface-coated metal parts also contributes significantly to a low-impedance connection. This is because the metals prevent tarnishing and corrosion even in aggressive atmospheres.

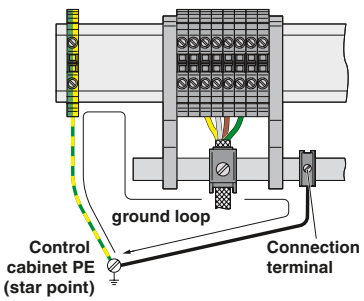

Figure 1 shows a shield connection with an avoidable ground loop. The larger the ground loop, the greater the induced interference voltage.

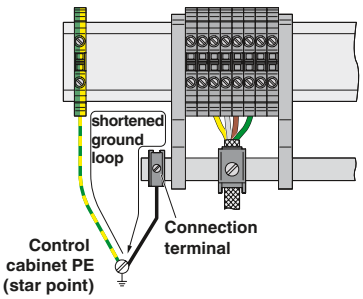

Figure 2: The pick-off terminal has been moved to the busbar, which has already reduced the size of the ground loop significantly.

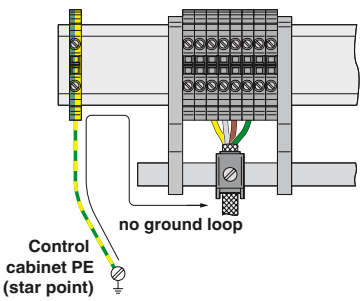

Figure 3: Here the connection between the shielded cable and ground runs via the DIN rail. The structure of this grounding is correct.

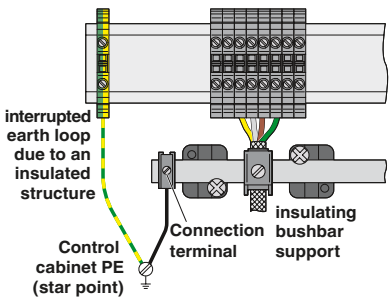

Figure 4 shows the optimum grounding structure. Due to the star-shaped structure, there is no ground loop here. The result is interference-free system operation.

Explanation of terms

Electromagnetic environment:
Totality of electromagnetic phenomena that exist at a given location. This totality can be described by listing and characterizing the sources of interference and disturbance variables that affect the given location.

Disturbance variable:
Disturbance variables are electromagnetic variables. These variables can cause an undesired influence in electrical equipment (malfunction, aging, destruction, and so on).

Source of interference:
Disturbance variables originate at the source of interference (device or physical process).

Potentially susceptible equipment:
Electrical equipment (block, module, device, system section, system) whose functional capabilities may be impaired by the influence of disturbance variables.

Interference emission, emitted interference:
The emission of disturbance variables or electromagnetic interference energy.

Coupling mechanism:
Physical mechanism via which disturbance variables from sources of interference influence potentially susceptible equipment.

Electromagnetic interference:
The unintentional electromagnetic effects that individual system elements have on one another.

3.8 The mutual impedance of shield clamp systems

To assess the quality of shield connections, the mutual impedance values for shield connection systems are represented as a function of the frequency in curve form. Such curves show the strong frequency dependence of the mutual impedance. Depending on the size of the inductive part of the mutual impedance, the curve is more or less steep toward high frequencies. This means that the length of the shield connection is directly represented in the curve, since it determines the inductive part of resistance to a large extent. The resistive part of the impedance is reflected in the height of the curve. Since noticeable differences between copper, steel, and aluminum DIN rails only occur at very high frequencies, the DIN rail material is not the determining factor for the quality of the shield connection. However, if using copper DIN rails, it should be noted that the surface tarnishes quickly. For aluminum, an oxide layer forms very quickly. Both of these properties can impair the quality of the shield connection.

3.9 Measuring method for the mutual impedance

In order to ensure accurate results, when measuring the mutual impedance of a shield connection system, make sure that external influences are excluded. A self-contained, externally shielded coaxial system must therefore be used for the measurement. The measuring device is a network analyzer which records the attenuation as a function of the frequency. The attenuation curve can be converted into an impedance curve by means of a simple calculation.
First, the measuring system is calibrated to zero, but without the shield clamp inserted. This also compensates for errors caused by the measuring system itself. Only then is the mutual impedance recorded with the shield clamp inserted. The internal resistance of the test receiver is R = 50 Ω and thus considerably higher than the mutual impedance to be measured (Zk << 1 Ω). This means that the current Ik is determined on a very approximate basis only by the generator voltage Ug and Ri. Both are constant and so too is Ik. The voltage drop Uk measured over Zk, virtually without loss, is proportional to Zk.

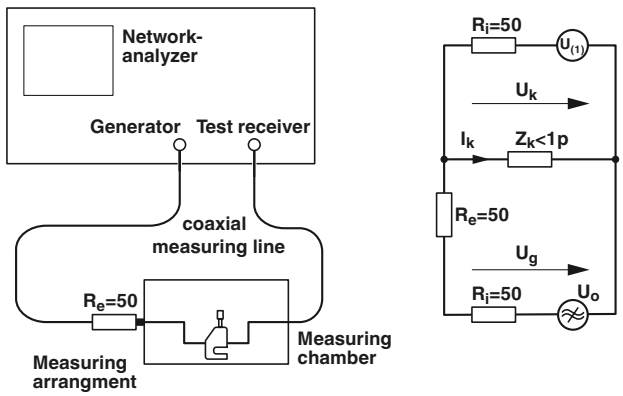

Measuring arrangement for measuring the mutual impedance

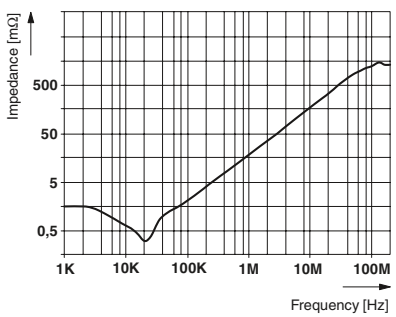

Shield attenuation curve

Pigtail

A pigtail does not support EMC-compliant cabling. With this shielding design, the cable shielding is twisted into an additional wire and connected to ground or the device shield. The problem with this method is that the twisted braided shield creates an additional antenna, which counteracts the actual shielding purpose.



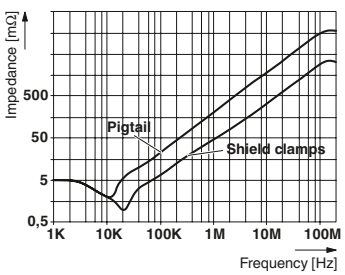

3.10 Shielded connectors

The measures considered thus far for shield connection using shield clamps are only suitable for discharging interference that is "collected" on the installation route. The control cabinet with the shield connection point is located in an area with low or zero interference. If a shielded cable is to be led into a control cabinet or device that is itself subject to severe interference, a different approach is needed. In this case it is not just the cables, but the entire control cabinet that needs to be shielded. Just as with cables and lines, the aim here is to achieve the densest and most comprehensive coverage possible. The starting point for this is a metal housing or a control cabinet developed specifically for EMC applications. Of course, cable entries and connectors must not create new gaps in the otherwise closed shielding system. This is why appropriate connectors have been developed for shielded cables, which connect the closed cable shielding to the control cabinet panel or the device via their housing. This makes both the construction and the connection of the connector more complicated. However, both pay dividends later when interference-free system operation is achieved.



Reliable protection from the field to the inside of the control cabinet with HEAVYCON industrial connectors

3.11 Construction of a shielded connector

The housing is a crucial component of a shielded connector. The metal housings of our heavy-duty industrial connectors are made from high-quality and corrosion-resistant die-cast aluminum. With their conductive surfaces and seals, they provide reliable EMC protection. The cable shielding is connected to the housing using cable glands made from nickel-plated brass. The EMC inserts of the cable glands are positioned above the cable shield during installation. As a result, the contact springs establish a secure connection between the connector and cable shield. With this construction, the connector creates an uninterrupted and fully enclosed transition between the cable shielding and the shielded housing.

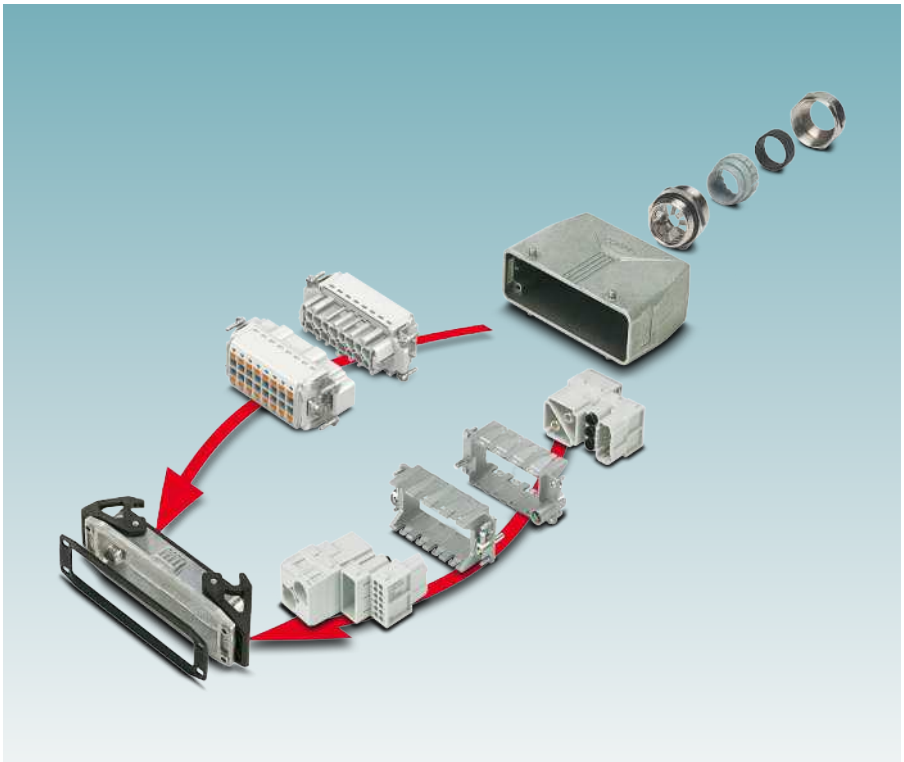

Construction of a shielded industrial connector with EMC cable gland

3.12 Further shielding

In systems that are particularly susceptible to interference or subject to severe interference, it may be necessary to shield all signal lines, connectors, devices, and control cabinets. Sensor/actuator cables are particularly susceptible here, as they are distributed over a large area of a production plant and therefore inevitably have to be led past sources of interference. One example of this is a welding unit in the automotive industry that is operated with robots. High welding currents that are switched on and off at short intervals generate a combination of different and very severe types of interference. To ensure interference-free operation in this type of environment, signal lines, sensors/actuators, and indeed the cabling for the necessary sensor/actuator boxes should always be shielded. This is because it is precisely these components that are connected to controllers that are particularly susceptible to interference.

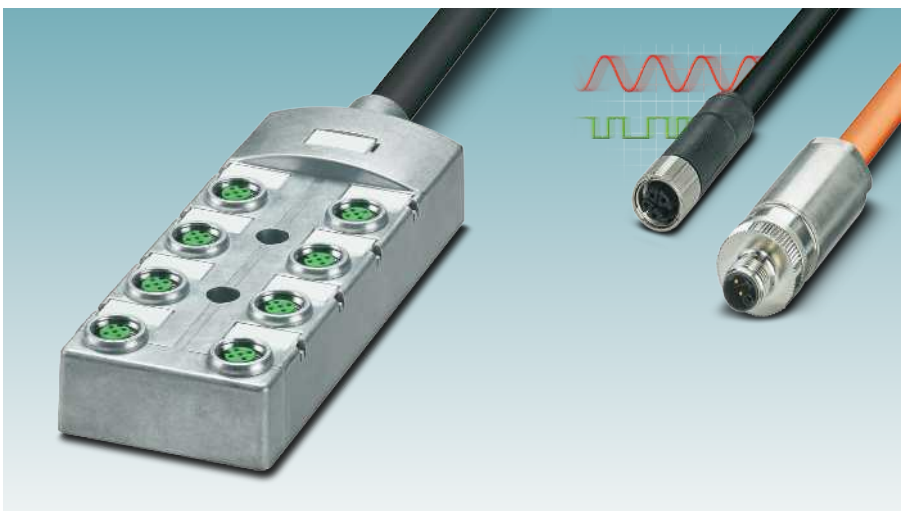

Shielded distributor boxes, connectors, and cables ensure interference-free operation

SCC shield clamps
Optimum shield attenuation and easy installation

The SCC shield clamps enable optimum shielding by means of tool-free, single-handed installation. The shield clamps are available in four versions, thus enabling consistent shielding for cable diameters from 2 mm to 20 mm.

Web code: #0845



Secure connection

The shield connection requires minimum effort. The contact spring, which is not compressed when installed, enables a secure and fast connection.

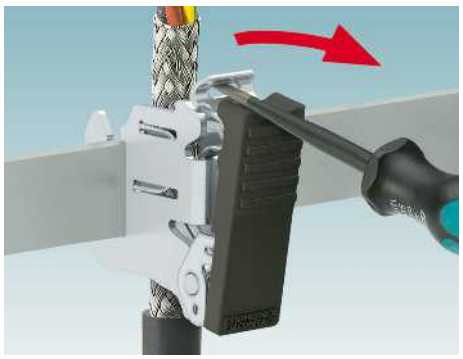

Easy to open

The shield clamps can be released quickly without applying much force. You just need a standard screwdriver.



High contact quality

The design of the contact spring guarantees a reproducible contact quality with long-term stability. The spring centers the conductor and compensates for conductor settling effects.





Low transfer impedance

Due to direct, large-surface and low-resistance contact with the neutral busbar, the shield clamps support low transfer impedance.



Clear cabling

Clear marking on the terminal clamp ensures that the cables can be assigned in accordance with the circuit diagram.



Mounting types

The three mounting types – neutral busbar, DIN rail, and direct mounting – provide you with a high degree of flexibility with regard to the shielding design.

SK shield clamps and shielding accessories

The SK shield clamps are available for different cable diameters. The diameters are designed so that they can be used across all cable diameters from 2 mm to 35 mm.

The shielding accessories consist of various support brackets, connection terminal blocks, neutral busbars, and marking accessories.

Web code: #0845

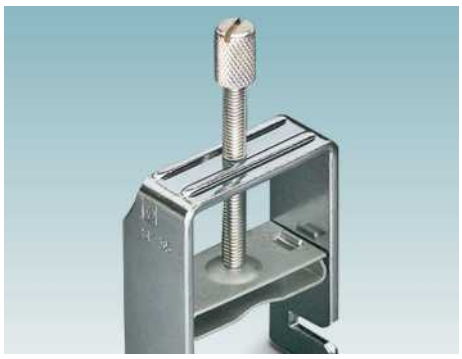

Easy clamping of cables

The knurled screw clamps the cables in place. The slot at the top of the knurled screw allows it to be tightened to a higher torque using a standard screwdriver.



Easy installation

Busbar and direct mounting enable a straightforward shielding design.

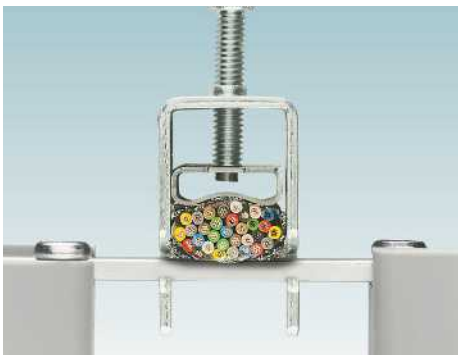

Spring-loaded, large-surface pressure plate

The pressure plate enables optimum cable clamping. High contact quality is ensured by the elasticity and resulting flexibility.



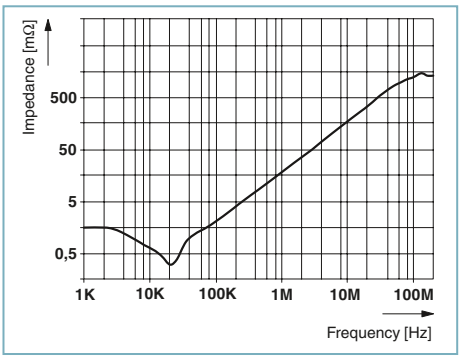

Optimum shield attenuation

The large contact facing of the SK clamps enables optimum shield attenuation, as is also the case with the SCC clamps.

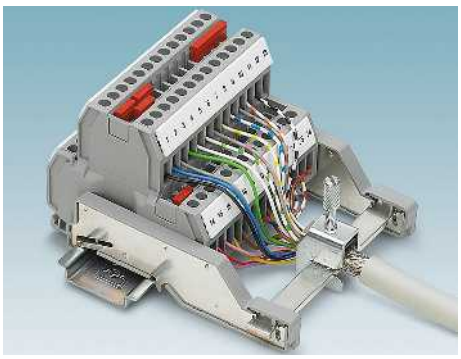

Support brackets

The various support brackets enable easy and compact shield clamp mounting on the neutral busbar.

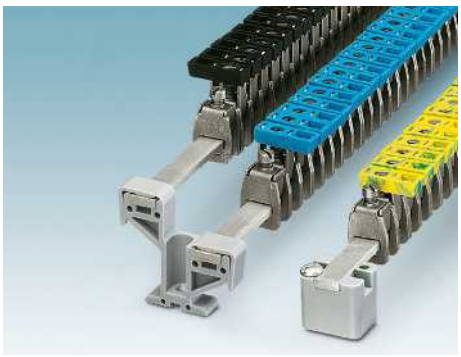

Compact connection terminal blocks

Easily connect your neutral busbar to the protective conductor of the control cabinet using the AKG connection terminal blocks.

HEAVYCON heavy-duty connectors Compatible connection, flexible combination

HEAVYCON heavy-duty connectors protect your interfaces and ensure the reliable transmission of power, data, and signals even under the harshest conditions.

Featuring conductive surfaces and seals, all metal housings are EMC-ready. They are resistant to vibrations, high mechanical stress, and are sealed up to IP69K degree of protection.

Web code: #0002



Flexible cable outlet

Thanks to the flexible bayonet lock of the HEAVYCON EVO housing series, you can determine the cable outlet direction on site and subsequently change it, if required.



Save space without panel mounting bases

HEAVYCON ADVANCE eliminates the need for the panel mounting base that is normally used on the device side. The housings are therefore particularly durable, robust, and space-saving.



Everything in one housing

With HEAVYCON modular, you can create your own individual connector. Combine contact inserts for power, signal, and data transmission in the same housing.



EMC ready

Proven product range

The HEAVYCON metal housings are made from particularly corrosion-resistant and conductive die-cast aluminum and ensure reliable EMC protection. Different sizes along with a broad range of sleeve and base housings provide the right interface for all applications.



Easy contacting

Direct insertion without any tools: contact inserts with Push-in connection provide a convenient conductor connection that is resistant to vibrations.

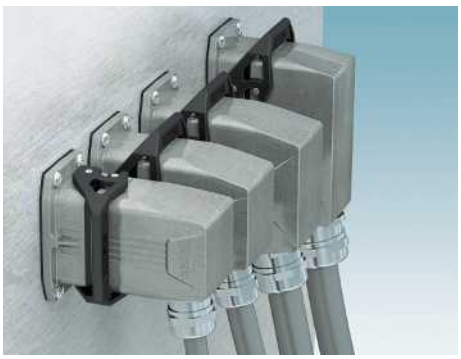

Convenient locking latch

The locking latch can be manually pressed quickly and easily. Housings with single locking latch are ideal for lengthwise alignment. Double locking latches can be installed sideways to save space.



Various outlet directions

Choose the appropriate option from our wide range of housings. We offer sleeve housings with straight or lateral cable outlet for all common metric and Pg thread sizes.

Circular connectors and cables
Reliable in the field

Safeguard the operation of your systems: We provide you with comprehensive solutions for the connection of sensors and actuators. Whether for standard applications, cabling in demanding industries or special applications.

Reliable and innovative shielding concepts ensure safe signal, data, and power transmission.

Web code: #2253





Advanced Shielding Technology

The innovative shielding concept for assembled cables guarantees a totally protected shield connection. Liquid metal completely encloses the cable shielding during the manufacturing process and ensures the large-area, complete bonding between the braided shield and connector.

- Shock- and vibration-resistant
- Resistant to transient overvoltages and lightning currents up to 20 kA
- Future-proof high-speed data transmission up to 40 Gbps

Advanced Shielding Technology

Designed by PHOENIX CONTACT

Scan the QR code and watch the video

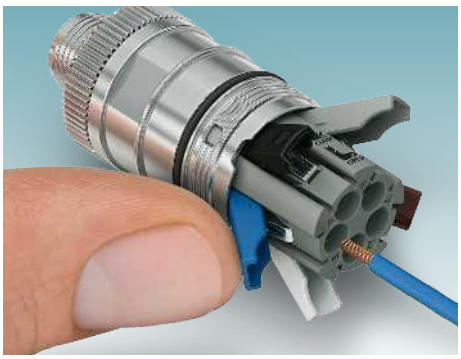

Easy assembly

Wire rigid and pretreated conductors easily and without tools with Push-in connection technology. The color and numerical codings in the connection area simplify assignment.

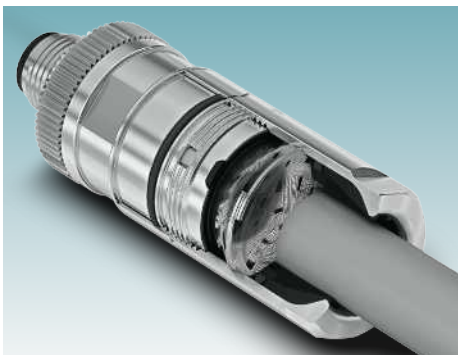

Safe and reliable operation

The long-term stable, vibration-proof PE and shield connection of connectors for assembly protects against electric shock and ensures minimal heating in the event of short circuit.



Flexible cabling

Bundle and distribute signals and power easily. Shielded distributor boxes and distributors enable efficient and modular cabling.

Open communication with customers and partners worldwide

Phoenix Contact is a global market leader based in Germany. We are known for producing forward-thinking products and solutions for the comprehensive electrification, networking, and automation of all sectors of the economy and infrastructure. With a global network, we maintain close relationships with our customers, something we believe is essential for our common success.

You can find your local partner at

phoenixcontact.com

ICC02-20.001.L3 MNR 1188791/2020-04-15/00